ADVANCED MECHANICAL AND OPTICAL SYSTEMS

Parc Scientifique du Sart-Tilman
rue des Chasseurs Ardennais
B-4031 Angleur - BELGIUM
Tel: 32 4 361 40 40   Fax: 32 4 367 20 07
email: info@amos.be

DOSSIER CONTRACTUEL / *DATA PACKAGE*

Date : ***Date* :**	13/07/07	**# Pages :** ***# Pages* :**	3			**Page :** ***Page* :**	1
Concerne : ***Concern* :**	MAST – Preliminary Design Data Package						
Vos réf. : ***Your ref.* :**		**Nos réf. :** ***Our ref.* :**	AMOS	1967	32/01	**Issue :** ***Issue* :**	1
Prep. par : ***Prep. by* :**	Laetitia LABADIA						

Section 1 - Design Documents :

Document Title	*Document Reference*	*Issue*	*Date*	*Section*
Preliminary Optical Design Report	AMOS/1967/30/01	1 A	13/07/07	1
Preliminary Mechanical Design Report	AMOS/1967/30/02	1 A	13/07/07	1
Preliminary Thermal Design Report	AMOS/1967/30/03	1 A	13/07/07	1
Preliminary Electrical Design Report	AMOS/1967/30/04	1 A	13/07/07	1
Preliminary TCS Design Report	AMOS/1967/30/06	1 A	13/07/07	1

Section 2 – Analysis Documents & Technical Notes :

Document Title	*Document Reference*	*Issue*	*Date*	*Section*
Main Performance Analyses & Error Budgets	AMOS/1967/01/10	1	13/07/07	2
Compliance Matrix (PDR Issue)	AMOS/1967/30/05	1	13/07/07	2
Complete Structure – FEM Analyses	AMOS/1967/01/08	3	13/07/07	2
M1 Cell Initial – FEM Analyses	AMOS/1967/01/09	2	13/07/07	2
Mirror Support	AMOS/1967/01/11	1	20/06/07	2
El & Alt Motorisation calculation note	AMOS/1967/01/01	1D	11/07/07	3
Upper Sun Shield Motorisation calculation note	AMOS/1967/01/12	1A	10/07/07	3

Section 3 – Mechatronics Documents :

Document Title	*Document Reference*	*Issue*	*Date*	*Section*
Control System Bloc Diagram	AMOS/1967/29/01	1 A	09/07/07	3
Bill of Material	AMOS/1967/29/02	1 A	10/07/07	3
Loop configuration	AMOS/1967/29/03	1 A	10/07/07	3
Position Range Diagram	AMOS/1967/29/05	1 A	10/07/07	3
Cable Wrap Description	AMOS/1967/29/14	1 A	09/07/07	3

Section 4 – Drawings :

Document Title	*Document Reference*	*Issue*	*Date*	*Section*
General View	1967-00-00-00	A	13/07/07	4
Optical Path Layout	1967-00-00-10	A	13/07/07	4
Building Interfaces	1967-00-00-90	A	13/07/07	4
Polarimeter Interfaces	1967-10-00-90	A	13/07/07	4
Tube General Assembly	1967-10-00-00	A	13/07/07	4
M1 Mirror Assembly	1967-11-00-00	A	13/07/07	4
M2 Mirror Assembly	1967-13-00-00	A	13/07/07	4
Fork General Assembly	1967-20-00-00	A	13/07/07	4
Altitude Drive Assembly	1967-21-10-00	A	13/07/07	4
Altitude Brake Assembly	1967-21-20-00	A	13/07/07	4
Coude Train Assembly	1967-23-00-00	A	13/07/07	4
Ground Interface General Assembly	1967-30-00-00	A	13/07/07	4
Azimuth Drive Assembly	1967-31-00-00	A	13/07/07	4
Derotator Assembly	1967-34-00-00	A	13/07/07	4
M6 Assembly	1967-35-00-00	A	13/07/07	4
Cable Wrap Assembly	1967-40-00-00	A	13/07/07	4
Upper Sunshield Assembly	1967-50-00-00	A	13/07/07	4

ADVANCED MECHANICAL AND OPTICAL SYSTEMS

LIEGE science park
rue des Chasseurs Ardennais
B-4031 Angleur - BELGIUM
Tel: 32 4 361 40 40 Fax: 32 4 367 20 07
email: info@amos.be

NOTE D'ENVOI / *SENDING FORM*

Date : ***Date :***	13/07/07	**# Pages :** ***# Pages :***	1	**Page :** ***Page :***	1
Concerne : ***Concern :***	MAST – Preliminary Design Data Package				
Vos réf. : ***Your ref. :***		**Nos réf. :** ***Our ref. :***	AMOS	1967	9/03
De : ***From :***	AMOS – Stefan DENIS	**Copie à :** ***Copy To :***	SDS-CFS-AMOS		
À : ***To :***	Dr P. VENKATAKRISHNAN Dr Nandita SRIVASTAVA	**Téléphone :** ***Telephone :***			

Veuillez prendre connaissance de ce document en tant que
Please read this document as

O Information / *Information*
O Demande de prix / *Price request*
X Action / *Action*

Dear Dr Venkatakrishnan,
Dear Dr Srivastava,

Please find attached the Preliminary Design Data Package in two printed copies and one CD-Rom copy.

We are waiting for your comments if any.

Best Regards

Stefan DENIS
Project Manager

S.A. AMOS
ADVANCED MECHANICAL AND OPTICAL SYSTEMS

LLOYD'S REGISTER QUALITY ASSURANCE ISO9001

UKAS QUALITY MANAGEMENT 001

MULTI-APPLICATION SOLAR TELESCOPE

PRELIMINARY OPTICAL DESIGN REPORT

[CONTRACT NO: PRUS20060004600101 FE]

Doc. nr : AMOS/1967/30/01
Issue : 1.A
Date : 13/07/07

	NAME	DATE	SIGNATURE
Prepared by	Stefan DENIS	13/07/07	Stefan Denis
Checked by	Pierre GLOESENER	13/07/07	
Released by	Stefan DENIS	13/07/07	Stefan Denis

DISTRIBUTION LIST

Name	Company	Quantity
Archives	AMOS	original
Stefan DENIS	AMOS	1 copy
Prof. P. VENKATAKRISHNAN	PRL/USO	1 copy

CHANGE RECORD

ISSUE	DATE	NB OF PAGES	MODIFIED PAGES	REMARKS
1.0	13/07/07	59	initial issue	

TABLE OF CONTENTS

TABLE OF TABLES & FIGURES

1. APPLICABLE & REFERENCE DOCUMENTS

Applicable and reference documents are defined here below. This includes documents and drawings.

1.1 APPLICABLE DOCUMENTS

ITEM	*TITLE*	*REFERENCE*	*ISSUE*	*DATE*
AD01	*Tender Specification [PRL/04/05-06]*	*1967/03/01*	-	*22/12/05*
AD02	*User Requirements*	*1967/03/02*	-	-
AD03	*MAST Technical Proposal (AMOS)*	*D1660/technical*	*2.0*	*19/05/06*
AD04	*Compliance Matrix (revised)*	-	-	*01/06/06*

1.2 REFERENCE DOCUMENTS

ITEM	*TITLE*	*REFERENCE*	*ISSUE*	*DATE*
RD01	*Preliminary Optical Design Report*	*1967/30/01*	*1.A*	*13/07/07*
RD02	*Preliminary Mechanical Design Report*	*1967/30/02*	*1.A*	*13/07/07*
RD03	*Preliminary Thermal Design Report*	*1967/30/03*	*1.A*	*13/07/07*
RD04	*Preliminary Electrical Design Report*	*1967/30/04*	*1.A*	*13/07/07*
RD05	*Compliance Matrix (PDR issue)*	*1967/30/05*	*1.A*	*13/07/07*
RD06	*Preliminary TCS Design Report [OSL]*	*1967/30/06*	*1.A*	*13/07/07*
RD07	*Main Performance Analyses & Error Budgets*	*1967/01/10*	*1.A*	*13/07/07*
RD08	*MAST Mirror Support Technical Note*	*1967/01/10*	*1*	*20/06/07*

1.3 REFERENCE DRAWINGS

ITEM	*TITLE*	*REFERENCE*	*ISSUE*	*DATE*
DWG01	*General View*	*1967-00-00-00*	*A*	*13/07/07*
DWG02	*Building Interfaces*	*1967-00-00-90*	*A*	*13/07/07*
DWG03	*Polarimeter Interfaces*	*1967-10-00-90*	*A*	*13/07/07*
DWG04	*Tube General Assembly*	*1967-10-00-00*	*A*	*13/07/07*
DWG05	*Fork General Assembly*	*1967-20-00-00*	*A*	*13/07/07*
DWG06	*Ground Interface General Assembly*	*1967-30-00-00*	*A*	*13/07/07*

2. ACRONYMS

ACE : Air-Conditioned Environment
AD : Applicable Document
Alt. : Altitude (axis)
Alt-Az. : Altitude-Azimuth (mount)
AMOS : Advanced Mechanical & Optical Systems
Az. : Azimuth (axis)
C : Compliant
DDR : Detailed Design Review
DWG : Drawing
FFOV : Full Field Of View
FOV : Field Of View
H/W : Hardware
HS : Heat Stop
I/F : Interface(s)
K-O : Kick-Off
MAST : Multi-Application Solar Telescope
mNC : marginally Non-Compliant
N/A : Not Applicable
NC : Non-Compliant
NFOV : Null Field Of View (= centre of the field)
OSL : Observatory Science Ltd.
PDR : Preliminary Design Review
pNC : partially Non-Compliant
PP : Polarimeter Package
PRL : Physical Research Laboratory (Govt. of India)
PTV : Peak-To-Valley
RD : Reference Document
RMS : Root Mean Square
RSS : Root Sum Square
S/W : Software
TBA : To Be Approved (by PRL/USO)
TBC : To Be Confirmed (by AMOS)
TBD : To Be Defined (by AMOS or PRL/USO)
TCS : Telescope Control System
USO : Udaipur Solar Observatory (PRL – Govt. of India)
WFE : WaveFront Error
WFS : WaveFront Sensor

3. SCOPE

This document forms a part of the description of the preliminary design done by AMOS for the MAST project. It is not intended at providing a thorough description of the telescope's design, but it rather defines the basic concepts, assumptions and interfaces taken into account by AMOS during the preliminary design phase.

Design documents that participate to the description of the MAST preliminary design include optical [RD01], mechanical [RD02], thermal [RD03], and electrical [RD04] preliminary design reports. These design reports can refer to specific reference documents [RDxx] whenever required. Assembly and interface design drawings [DWGxx] provide complementary information to the design description. A TCS preliminary design report [RD06] completes the list of design documents.

This document is part of the MAST PDR data package, and thus participates to the process of freezing the basic concepts, assumptions and interfaces before proceeding to the detailed design. It is important to agree on a frozen status of these design aspects at PDR level in order to avoid schedule and cost impact of design modification during the detailed design phase.

The telescope design is obviously driven by the particular object it is dedicated to observe: the Sun. On the other hand, the specific environmental conditions (especially the temperature range and variations) are also driving parameters for the design. Finally, the telescope preliminary design aims at basically complying with the design requirements expressed by PRL/USO (Alt-Az. mount, off-axis optical configuration, materials requirements for the mirrors, ...).

Whenever relevant, a justification (discussion, analysis, calculation note) of the design choices is provided or referred to (through Reference Documents). This aims at showing the good match of the design with the PRL/USO requirements ([AD01] & [AD02]). Meanwhile, specific Performance Analyses and Error Budgets related to the main MAST requirements are provided in a separate document [RD07], while a Compliance Matrix summarizes the compliance status of the design with respect to the requirements in another separate document [RD05].

This document specifically deals with the optical part of the MAST preliminary design. It focuses on the optical configuration that drives the other parts of the design (especially the mechanical one described in [RD02]), on its implications, as well as on the description of optical components of the telescope (main mirrors and some auxiliary items).

4. TELESCOPE DESIGN OVERVIEW

The Multi-Application Solar Telescope (MAST) is a 50 cm diameter class telescope to be installed on the USO island on the lake Fatehsagar in Udaipur, India. It is dedicated to solar observation.

The telescope is designed, manufactured, assembled and installed on-site by AMOS. It will be installed on the upper floor of the main existing building. Some appointments of the existing pier, dome and 2nd floor will be necessary for that purpose. Moreover, some additional equipment will be required on-site for proper operation of the telescope.

An overview of the MAST design outlines 3 categories of design elements that drive the structure of the document:

- the *telescope structure* (§.8), including the tube, fork and ground interface parts;
- the *mirror units* (§.9), including the primary mirror, the secondary mirror and the tertiary mirror units, the Coudé optics unit, the field derotator unit, the back-end folding unit, and the wavefront sensor pick-off unit;
- the *auxiliary equipment* (§.10), including a M1 cover and a M1 flushing system, the heat stop, an output pupil stop, a guider telescope, a wavefront sensor, the altitude and azimuth cable-wraps.

The implantation of the telescope in the existing building and the interfaces with the PRL/USO equipment and site also forms an important part of the design (§.11).

All the above mentioned design elements concern several aspects of the design:

- the optical design;
- the mechanical design;
- the thermal design;
- the electrical design.

Each of these design aspects is detailed in a separate document.

Optical Design

Optical design (detailed in this document) is based on an off-axis afocal gregorian configuration formed by two confocal off-axis concave parabolas (M1 & M2). The ratio of the focal lengths (f_{M1}/f_{M2}) gives the angular afocal magnification, which is the reverse of the pupil magnification.

A field stop, located at the primary focus, limits the field of view to a diameter of about 6 arcmin. This field stop also and primarily serves as a heat stop (see thermal design). A pupil stop will materialize the output pupil after M2. Both the pupil stop and the field/heat stop are included in the auxiliary items list.

The specification speaks for a one-tenth pupil demagnification, and hence to a 10-times angular magnification. Thus, the collimated output beam presents a one-degree field diameter spread angle that makes the full field beam footprint quickly enlarge.

A set of flat mirrors (M3 to M6) folds the beam several times along the desired path that coincides with the mechanical altitude and azimuth axes: between M3 and M4, and between M5 and M6, respectively.

The last flat folding mirror (M6) folds the beam out of the telescope towards back-end instruments. Beside these flat folding mirrors, the optical design also includes a pick-off system that folds part of the beam towards the wavefront sensor system.

An optical field derotator takes place between M5 and M6, i.e. where the beam coincides with the azimuth axis. It is formed by 3 flat mirrors rotating as a group. The aim of this field derotator is to keep the image stationary at back-end instruments level, while the Alt-Az. mount concept basically makes the image rotate.

A guider telescope and a wavefront sensor complete the optical design aspects for the telescope, as auxiliary equipment.

Optical configuration and interfaces shall be definitely set from the PDR.

Mechanical Design

The *mechanical design* (detailed in [RD02]) is based on the well-known Alt-Az. mount concept. The telescope is then split into 3 main parts or assemblies:

- the ground interface assembly, that interfaces the telescope to the pier, supports the telescope's other main parts through an azimuth bearing, and which structure supports some equipment such as a field derotator, a mirror unit folding the beam to the back-end instruments, and a wavefront sensor unit;
- the fork assembly, which rotates around the azimuth axis, and supports the Coudé optics and the altitude bearing;
- the tube assembly, which rotates around the fork's altitude axis and includes the primary, secondary and tertiary mirrors (M1, M2, M3) units, a heat-stop, and the interface for the polarimeter package.

Most of the auxiliary equipment also concern the mechanical design: a dust protective cover and a front surface flushing system for the primary mirror, the heat stop and the pupil stop, the guider telescope and the wavefront sensor, the azimuth and altitude cable-wraps. All these items have to be implemented in the overall mechanical design.

The mechanical design also takes into account the implantation of the telescope and some auxiliary equipment (e.g. the azimuth cable-wrap) within the existing building, according to some appointments to be defined, as mentioned above. The main appointments are:

- to change the existing pier in order to support and interface with the telescope design (ground interface);
- to change the existing dome for an entirely retractable one (to operate the telescope in open-air conditions), while persistence of a collapsible wind screen with ventilation capabilities still should be considered;
- to add a new floor at ring level of the existing dome, that provides maintenance and engineering access to fork and tube equipments located above it, while thermally isolating the existing 2nd floor (with pier, ground interface and control equipment) from the open-sky upper level (with fork and tube).

Beside the implantation of the telescope in the existing building, a major task of the preliminary mechanical design is to define all interfaces with customer equipment and site, so that these interfaces are definitely set from the PDR.

The mechanical design goal is to provide a good overall stiffness (with first global eigenfrequency higher than 20 Hz), a mechanical stability suitable regarding the specification, and a robust cost effective design. Another goal of the mechanical design is to keep the beam path as short as possible, in order to limit the impact of the angular field spread. The mechanical design is also in charge of ensuring an almost deformation free support of each mirror.

Thermal Design

The *thermal design* (detailed in [RD03]) aims at controlling the impact of the solar flux on opto-mechanical elements, as well as controlling the temperature of the equipment so that the difference with respect to the ambient temperature is minimum in order to limit seeing degradation. This is done by heating and cooling of the main elements. Thermal design and control is difficult because of large variations of operating temperature and fast temperature variation (especially in the morning hours).

The thermal design mainly concerns the following equipment: telescope structure (shielding), telescope environment (paint/coating of the floor), mirrors M1 to M5 (heating and cooling concept), and obviously the heat stop. The assumption is made that a new floor (to be appointed – see above) thermally isolates the existing 2nd floor from the open-sky upper level exposed to the sun. That way, equipment that is part of the ground interface assembly or that is more generally located on the 2nd floor level (e.g. control equipment) is located in a temperature-controlled (or air-controlled) environment (ACE). This eases by far the thermal control of these items.

Thermal design also concerns the flushing system of the primary mirror and the telescope cable-wraps (or equivalent system) because of the cooling fluids.

Thermal design basic concepts and interfaces shall be set from the PDR.

Electrical Design

The *electrical design* (detailed in [RD04]) includes 3 aspects of the telescope design:

- electrical design itself (regarding power supply, electrical control, wiring, ...);
- mecatronics design (dealing with electro-mechanical equipments and their control);
- software design (mainly for control, thus mainly the Telescope Control Software).

Mecatronics on the MAST project mainly concerns the definition of the motion axes and the choice of equipment that performs each required motion respectful of the telescope's specified requirements. The main motion axes of the telescope are the Alt. and Az. rotation axes. Other motion axes of importance at equipment level include the M2 hexapod motion (to correct for M1-M2 operational misalignment) and the field derotator rotation axis. Further motion axes include possible guider telescope and wavefront sensor needs. The mecatronics part of the electrical design mainly deals with the control loops.

The TCS is sub-contracted to OSL and the TCS preliminary design is described in a separate document [RD06].

The electrical design – properly speaking and beside the mecatronics and software considerations – defines the electrical cabinets, the electronics equipment and the cables required to proper functioning of the control loops.

Electrical interfaces and basic concepts shall be definitely set from the PDR.

5. OPTICAL DESIGN DETAILS

The optical configuration of the main telescope[1] corresponds to an afocal off-axis gregorian combination, with two confocal off-axis concave parabolic mirrors.

A suite of flat folding mirrors propagates the collimated beam down to the stationary user's back-end instruments laboratory.

The off-axis configuration corresponds to a requirement, as well as the diameter of the primary mirror (Ø 50 cm). The mechanical Alt-Az. mount is also required. The required covered field of view is 6 arcmin diameter. This field of view is limited by a field-stop, also and principally acting as a heat-stop (§.10.3).

A polarimeter package (USO/PRL responsibility – not provided by AMOS) shall take place between M2 and M3, and the beam size at this polarimeter package level shall be 50 mm to 60 mm diameter, according to the technical Kick-Off meeting in Udaipur.

An optical field derotator will take place in the collimated beam in order to balance image rotation due to the Alt-Az. mount configuration.

5.1 OPTICAL SEQUENCE

Therefore, the sequence of optical components along the field path lists as follows:

- off-axis afocal gregorian telescope including primary mirror (M1), field/heat-stop, and secondary mirror, in that order, plus some materialization of the pupil;
- polarimeter package in the collimated beam after the secondary mirror and before the next folding mirror;
- tertiary flat mirror folding the collimated beam from M2, along the altitude axis towards the Coudé train;
- Coudé train built from two flat mirrors (M4 and M5) aiming at folding the beam from M3, along the azimuth axis, towards M6;
- optical field derotator, including 3 flat mirrors, aiming at derotating the image while keeping the beam propagating along the azimuth axis after field derotation between M3 and M6;
- back-end folding mirror (M6) that stationary folds the beam horizontally towards the back-end instruments laboratory.

Some optics will be added – more probably a high quality glass plate somewhere after M6 – to pick off part of the light towards a wavefront sensor, while keeping most of the light reaching the back-end instruments.

---

[1] this term is used to distinguish the scientific telescope from the guider telescope – see §.10.5

The telescope input pupil is placed on the primary mirror. The focal lengths of primary and secondary mirrors directly drive pupil demagnification. Pupil demagnification is given by the ratio f_{M2}/f_{M1} between primary and secondary mirrors focal lengths.

5.2 OPTICAL DEMAGNIFICATION RATIO

Regarding pupil demagnification and beam size (at polarimeter level and at back-end instruments level), here are some considerations to keep in mind.

- Our technical proposal was based on a 5:1 pupil demagnification ratio to account for the 10 to 12 cm output beam diameter specification[2]. After the technical Kick-Off meeting in Udaipur, the optical design has been changed to accommodate for a 10:1 pupil demagnification giving compliance to a 5 to 6 cm diameter beam at polarimeter level - this design is still the one used nowadays.
- This means that the 6 arcmin field on the sky is magnified by 10 - with the new design - rather than 5, after M2; thus with a field spread of the beam of 18 mm per meter of light travel path rather than 9 mm per meter (but with on-axis or zero-field beam diameter of 50 mm rather than 100 mm).
- That said, one should note that the output pupil is located in either case at a distance after M2, which is about the focal length of M2, whatever the pupil demagnification. The position of the output pupil in the vicinity of the heat-stop requires the polarimeter package to be located away from it and thus suffer from field spread[3].
- The change of pupil demagnification also shorten the focal length of M2, and as a side-effect, reduces the off-axis distance of the output beam, requiring a compact lateral design of the polarimeter package[4]. The polarimeter package has to be kept close to the output pupil and should preferably not shift towards M3.
- The total distance along the optical path, from the output pupil to the back-end instruments laboratory is hardly less than 5 meters. Hence a minimum beam spread of 90 mm in diameter, on top of the 50 mm diameter on-axis footprint, giving a total beam diameter – accounting for 6 arcmin field diameter on the sky – of 140 mm or more (160 mm at about 1,5 meter away from M6).

Beside these considerations, one must point out that the specification [AD01] calls for two apparently opposed requirements regarding the beam size:

- "output beam size: 10 to 12 cm diameter corresponding to 6 arcmin FOV" (from [AD01] - §.3.1 "System Specification");
- "size: not more than 5 cm diameter (from [AD01] - §.3.2.1 "Subsystems – Intermediate collimated output beam").

---

[2] thus not accounting for the 50 mm diameter requirement at polarimeter level

[3] proposed location of the polarimeter package still fits with a 60 mm diameter (50 mm + 10 mm field spread), which is in line with the technical Kick-Off discussion in Udaipur

[4] note that the 100 mm diameter size - by 150 mm long - defined in the specification is ok, as well as the recent design from USO with a 130 x 200 x 150 mm^3 box with a Ø 65 mm hole at 60 mm from X & Y sides

The first point seems to indicate that the final output beam size includes the field spread (footprint envelope of all collimated beams for all field points). This aspect is not clear regarding the "intermediate" collimated beam (for polarimeter implementation).

The remark above explains our choice to change the demagnification ratio in order to allow the following:

- to provide a 5 cm diameter output pupil, corresponding to the same for the on-axis beam size (footprint without considering field points);
- to limit the field spread envelope below 60 mm diameter at polarimeter level by locating the polarimeter close enough from the output pupil;
- to use the field spread from the output pupil towards the back-end instrument location so that the final output beam size (footprint envelope of all collimated beams for all field points) expands to something not too far from the specified 10 to 12 cm.

The following formula is used to compute the field spread footprint diameter at a distance L from the output pupil:

$$\varnothing_{out} \approx \varnothing_{OP} + 2 \cdot L \cdot \tan\left(g \cdot \vartheta_{in}/2\right)$$

Eq. 1 (beam spread)

where:

- g is the angular magnification (or pupil demagnification ratio);
- $\varnothing_{OP} = \varnothing_{in}/g$ is the output pupil diameter[5];
- ϑ_{in} is the field angle diameter on the sky (portion of the sun to deflect).

From Eq. 1, it can be seen that there is no pupil demagnification value for which an optical path length (L) from the pupil larger than about 4 m will keep the field spread beam diameter below the 12 cm requirement.

The maximum distance L from the output pupil that preserves the 12 cm diameter requirement is 4,16 m and is obtained with a pupil demagnification ratio of 8,3:1. This corresponds to an output pupil diameter of 60,24 mm and a beam spread angle of 41,5 arcmin (full angle).

For a pupil demagnification ratio of 10:1, the 12 cm diameter requirement is reached for a length L = 4,035 m (i.e. close to the optimum), while for a pupil demagnification of 5:1 it is reached after a pupil distance of about 2,3 m only.

It is therefore not possible to fit within both requirements[6] unless the optical path length from the output pupil is kept below 4 meters, which is practically impossible.

---

[5] i.e. the input pupil divided by the pupil demagnification ratio

[6] 5 to 6 cm diameter at polarimeter level and 10 to 12 cm at the output from the telescope

One could think at a pupil re-imaging solution that images the output pupil after M2 (diameter of 5 cm) on a final exit pupil at back-end instruments level, with a magnification of 2 to obtain a final 10 cm diameter exit pupil. This idea however trip over some stumbling-blocks as:

- such a pupil imaging system was not included in our proposal and is thus out of scope of the current contract;
- such a pupil imaging system would bring some more optics in the optical path towards the back-end instruments, which is not suitable for other performance aspects (transmission, global wavefront error, ...) as understood from the technical Kick-Off discussion in Udaipur (where it was discussed to limit the number of optics as far as possible).

Moreover, it is not sure at all that such a pupil imaging system would find a solution that fits with the overall telescope design. A first quick attempt seems to show impossibility.

As a conclusion to this pupil demagnification and beam size discussion, we should point out the following:

- *it is not possible to comply with both required beam sizes and the proposed design with a pupil demagnification ratio of 10:1 is probably the best choice*[7]*;*
- *it is practically not possible to comply with the output beam diameter requirement but the proposed design can stick as close as possible to it by minimizing the optical path length (as far as possible with mechanical design issues).*

5.3 AFOCAL COMBINATION

The discussion between USO/PRL and possible suppliers during the tender phase calls for an off-axis telescope rather than the on-axis configuration as sketched in both specification documents [AD01] & [AD02]. Although the specification documents have never been updated to reflect this major requirement change, it is reflected in the last issue of the AMOS Technical Proposal [AD03].

The stationary collimated output beam requirement has not been changed yet; thus calling for an afocal configuration.

An afocal off-axis configuration made from two confocal off-axis concave parabolas has been proposed in [AD03] and has been kept as baseline concept. Nevertheless, the parameters from the off-axis parabolas have been adapted to stick with a modified pupil demagnification ratio, as explained above (§.5.2).

---

[7] it moreover exhibits a smaller beam size up to about 6 m away from the output pupil, despite a two times larger field spread angle, hence allowing slightly smaller mirrors up to the last folding one (M6)

Changing the pupil demagnification ratio basically corresponds to change the focal lengths ratio by the same amount. Simply scaling down the secondary mirror by a factor of two would lead to available space constraints in heat-stop and secondary mirror area. Moreover, scaling down the focal length of the secondary mirror also scales down its off-axis distance, which is required to be large enough to avoid the collimating beam exiting the secondary mirror being obstructed by any item on its path (principally at heat-stop level and allowing for sufficient space for the polarimeter package).

This has been turned around by slightly increasing the primary mirror's focal length (and then giving the secondary mirror's focal length the required value which does not have to be scaled down that much), while increasing also the off-axis angle of both mirrors to space them apart as much as possible across the common optical axis.

A first task has been then to check the optical performance (mainly wavefront error) of the modified design, including regarding field aspects. It has been done successfully[8]. Still, it appears that the off-axis design is sensitive to misalignment.

A second task was to quickly check that the modified – and more compact – design leaves enough space in the primary focus and secondary mirror area. This has been done successfully also in the early stages of the preliminary design, and confirmed along the overall preliminary design phase.

The off-axis afocal modified design thus ended up with a 10:1 pupil demagnification ratio and primary to secondary mirrors focal lengths and off-axis distances ratio.

The parent parabola for the off-axis primary mirror shows a 4 m radius of curvature (2 m focal length) with a 575 mm off-axis distance. Optical clear aperture on the off-axis primary mirror is 50 cm as required (about 55 cm are considered for the mechanical diameter). Details are given in §.6.1, §.9.1, and §.9.2).

5.4 OUTPUT PUPIL

As mentioned above (§.5.2), the entrance pupil of the system is placed on the primary off-axis mirror and the pupil imaged by the system (output pupil) is thus[9] located at a distance after the secondary mirror which is about the same as this mirror's focal length.

Nevertheless, defining correctly a pupil on an off-axis mirror is always something uncomfortable. Therefore it has been decided to materialise the output pupil and place the system's aperture stop on it (STO in the ZEMAX® model - §.6).

Thus the entrance pupil on the primary actually is the image of the materialised output pupil, reversely through the system, and does not have to be exactly defined or modelled.

---

[8] off-axis design residuals mentioned in the Technical Proposal [AD03], seem to be due to wrong modelling of the off-axis optical system

[9] object (entrance pupil) located at a distance of 10 times the secondary mirror's focal length or more (virtual image produced by the primary mirror behind this one)

5.5 COUDÉ TRAIN

The Coudé train is the suite of mirrors that folds the beam, exiting the tertiary mirror along the altitude axis, onto the azimuth axis. Therefore, mirrors from the Coudé train only rotate around the azimuth axis and are stationary with respect to the altitude axis.

The basic and classical design presented in the Technical Proposal [AD03] includes three mirrors in addition to the tertiary mirror. Moreover, two of these were located outside the fork, thus extending the optical path.

The design of the Coudé train has been modified in order to spare one mirror and fold the beam from altitude to azimuth axes only thanks to two mirrors instead of three.

The price to pay is an obtuse folding angle on the last Coudé train mirror (M5), which is then required to be larger. This impact is limited by a folding angle as acute as possible on the other Coudé train mirror (M4).

The Coudé train is described in §.9.4 but it is useful to mention here that the modified design allows to spare one mirror, which is especially interesting in terms of wavefront error and transmission performance.

5.6 FIELD DEROTATOR

An image - or field - derotator is required to make the field of view stationary in the output beam (see §.3.1-e "System Specifications" in [AD01]). This obviously has to be done optically.

The drawback of this derotator is that it adds optical surfaces in the optical path.

The idea of merging the optical field derotator with the Coudé train and tertiary mirror (§.5.5) has been reviewed. It used a folding mirror rotating at a ratio of 1:2 with respect to mount angles. It has been showed that the concept does not pass the 3-dimensional analysis with combined angles of incidence.

Therefore, the optical field derotator uses the classical symmetrical 3-folding mirrors, with the collimated beam exiting the derotator along the same axis that it enters it. That same axis is also the rotation axis of the derotating system.

5.7 WFS PICK-OFF

Although not specifically required from the specification, a wavefront sensor shows to be necessary to correct the optical alignment errors from the afocal configuration.

The final definition of the wavefront sensor requirements, interfaces and miscellaneous aspects needed first to complete an overall preliminary design of the whole telescope. Therefore, no preliminary design for the wavefront sensor itself has been performed yet. Nevertheless, contacts have been taken with possible suppliers and profitable discussions have been undertaken (mainly with one of them).

The main issues are currently where the wavefront sensor will be located, and how it will be able to analyse the output beam to provide the M2 mechanism corrections.

In any case, the wavefront sensor will require some optics to pick-off part of the output beam light. This means that some extra optics will be added in the optical path towards the back-end instruments.

As the field is directly limited at field-stop (heat-stop) level, it is not possible to perform any field separation and use an off-axis wavefront sensor. Similar considerations reject the possibility to perform aperture separation. Therefore, the only remaining solution is to pick-off the entire field[10] and aperture to avoid geometrical perturbations. The amount of picked-off output beam's light will then be defined by the reflectivity and/or transmissivity of the pick-off optics.

Picking-off part of the light can be performed:

- either by allowing a given amount (percentage) of reflectivity or transmissivity thanks to spectrally neutral coating (or no coating at all, using Fresnel reflectivity),
- or by using some spectral selection thanks to dichroïc coating.

The spectral selection seems difficult since it would require part of sunlight spectrum to be unavailable to scientists (back-end instruments). The former solution is thus kept as baseline. The amount of pick-off will have to be defined.

This aspect should not be underrated and requires more investigation during the detailed design phase, based on PDR considerations and comments.

Especially because the focusing optics in front of the wavefront sensor, and the collimator inside the wavefront sensor, could require to narrow the useful spectrum for chromatic aberration reasons (TBC). This could even bring back alive the dichroïc solution.

In any case, both aspects should be considered: enough useful light available to the wavefront sensor and sufficient transmission towards the back-end instruments to comply with the requirements.

The trade-off between possible solutions for the pick-off optics location and mode of operation is obviously then limited to 3 possibilities:

- inserting a mainly transmissive plate (with first surface reflecting a limited amount of light towards the wavefront sensor) in the collimated beam between M2 and M3;
- inserting a mainly transmissive plate (with first surface reflecting a limited amount of light towards the wavefront sensor) in the collimated beam after M5 (preferably after the optical field derotator, and more preferably after M6);
- using an existing mirror (preferably M6) with a partially transmissive coating and a transmissive substrate, that would transmit a limited amount of light towards the wavefront sensor, while reflecting most of light towards the back-end instruments.

---

[10] although only a limited field is required for on-axis wavefront sensing

Note that locating the wavefront sensor and its pick-off optics in the tertiary mirror and Coudé optics area is not comfortable due to available space there. The same applies (but less critically) around the optical derotator.

Each of the 3 possible solutions has their advantages and drawbacks. These can be listed in the following summary table.

Solution	*Advantages*	*Drawbacks*
plate (M2-M3)	➢ no pupil derotation required ➢ smaller optics (closer to pupil) ➢ only afocal configuration addressed (no perturbation by folding mirrors)	➢ thermal issues (not in ACE and difficult to control) ➢ installation on moving part of the telescope (tube) ➢ additional optics in the optical path towards back-end instruments
plate (after M6)	➢ large optics required (away from output pupil) ➢ pupil derotation required (TBC) ➢ whole telescope's optical path monitored (but only afocal part controlled)	➢ located in ACE with no additional thermal control required ➢ located in a stable environment (ground interface structure) ➢ additional optics in the optical path towards back-end instruments
mirror (M6)	➢ large optics required (away from output pupil) ➢ pupil derotation required (TBC) ➢ whole telescope's optical path monitored (but only afocal part controlled)	➢ located in ACE with no additional thermal control required ➢ located in a stable environment (ground interface structure) ➢ requires high quality and good transmission substrate for M6

Table 1: WFS Pick-Off Trade-Off

The baseline is currently to go for the solution with the transmitting BK7 glass plate (making a angle with the collimated beam axis) located after M6. The pick-off could be obtained by Fresnel reflection - or by low reflective coating - on the first surface, while the other surface would be anti-reflective coated. This requires checking the sufficient optical throughput to the wavefront sensor, including spectral aspects. This solution offers limited impact on the wavefront error performance (flat transmitting surfaces and available high quality glass).

6. OPTICAL MODEL

The telescope is modelled with the optical design software ZEMAX®. Some preliminary analyses, as well as checking basic design aspects, have been performed during the design phase with the optical model. It has been slightly modified accordingly to account for concerned topics. The current optical design model is presented here, which corresponds to the PDR design of the telescope.

6.1 PRESCRIPTION DATA

Figures below show the ZEMAX® prescription. Figure 1 provides the basic data (data summary), while Figure 2 and Figure 3 show all the details, including tilts and decentres for each surface, as well as aperture data (mechanical).

Some helper dummy surfaces have been added to the model to allow specific tasks (like tolerancing) or to show telescope's features (like polarimeter location and axes rotation).

Several telescope's views are shown after the prescription data (Figure 4 to Figure 10).

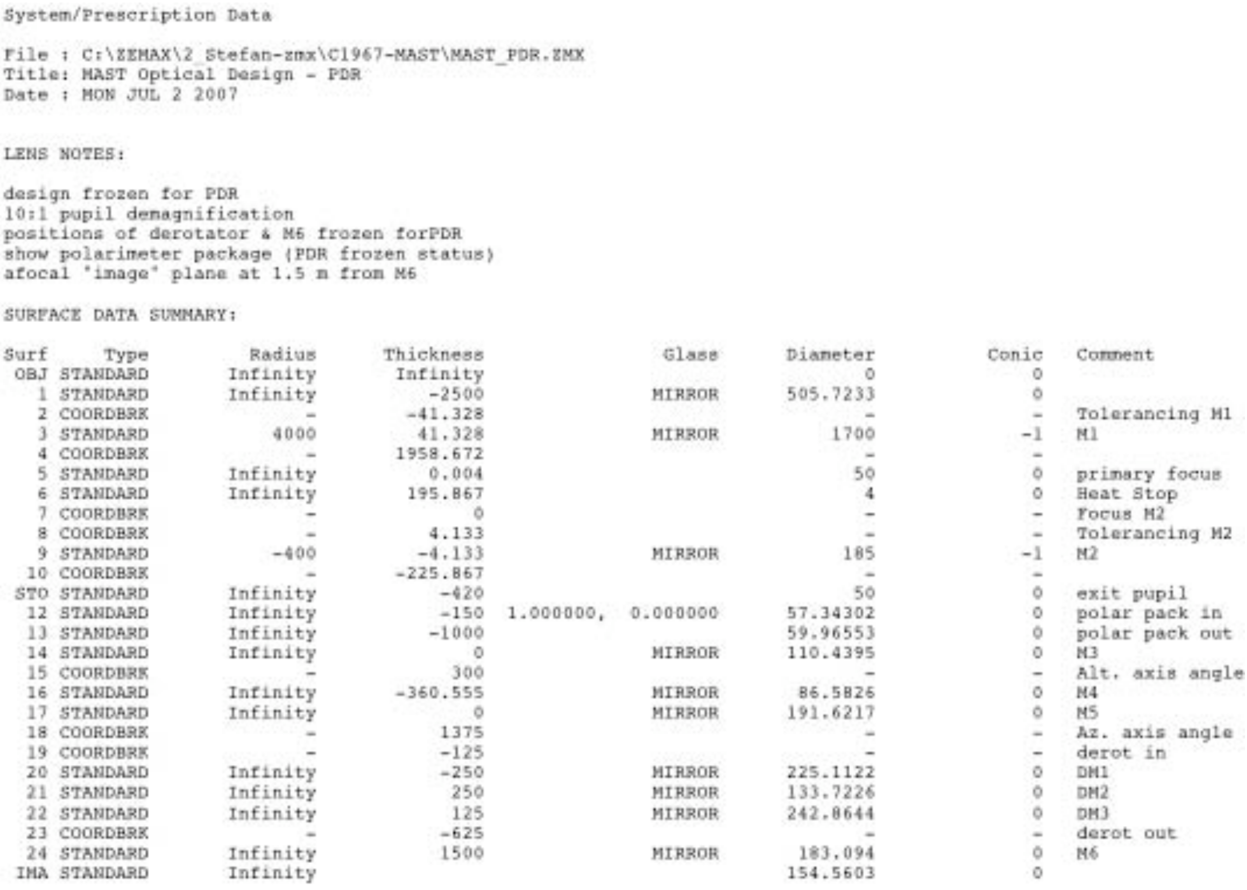

```
System/Prescription Data

File : C:\ZEMAX\2_Stefan-zmx\C1967-MAST\MAST_PDR.ZMX
Title: MAST Optical Design - PDR
Date : MON JUL 2 2007

LENS NOTES:

design frozen for PDR
10:1 pupil demagnification
positions of derotator & M6 frozen forPDR
show polarimeter package (PDR frozen status)
afocal 'image' plane at 1.5 m from M6

SURFACE DATA SUMMARY:

Surf     Type         Radius      Thickness                    Glass      Diameter         Conic   Comment
 OBJ STANDARD       Infinity       Infinity                                      0             0
   1 STANDARD       Infinity          -2500                   MIRROR      505.7233             0
   2 COORDBRK              -        -41.328                                      -             -   Tolerancing M1
   3 STANDARD           4000         41.328                   MIRROR          1700            -1   M1
   4 COORDBRK              -       1958.672                                      -             -
   5 STANDARD       Infinity          0.004                                     50             0   primary focus
   6 STANDARD       Infinity        195.867                                      4             0   Heat Stop
   7 COORDBRK              -              0                                      -             -   Focus M2
   8 COORDBRK              -          4.133                                      -             -   Tolerancing M2
   9 STANDARD           -400         -4.133                   MIRROR           185            -1   M2
  10 COORDBRK              -       -225.867                                      -             -
 STO STANDARD       Infinity           -420                                     50             0   exit pupil
  12 STANDARD       Infinity           -150    1.000000,    0.000000      57.34302             0   polar pack in
  13 STANDARD       Infinity          -1000                               59.96553             0   polar pack out
  14 STANDARD       Infinity              0                   MIRROR      110.4395             0   M3
  15 COORDBRK              -            300                                      -             -   Alt. axis angle
  16 STANDARD       Infinity       -360.555                   MIRROR       86.5826             0   M4
  17 STANDARD       Infinity              0                   MIRROR      191.6217             0   M5
  18 COORDBRK              -           1375                                      -             -   Az. axis angle
  19 COORDBRK              -           -125                                      -             -   derot in
  20 STANDARD       Infinity           -250                   MIRROR      225.1122             0   DM1
  21 STANDARD       Infinity            250                   MIRROR      133.7226             0   DM2
  22 STANDARD       Infinity            125                   MIRROR      242.8644             0   DM3
  23 COORDBRK              -           -625                                      -             -   derot out
  24 STANDARD       Infinity           1500                   MIRROR       183.094             0   M6
 IMA STANDARD       Infinity                                              154.5603             0
```

Figure 1: ZEMAX® Optical Prescription data - Surface Data Summary

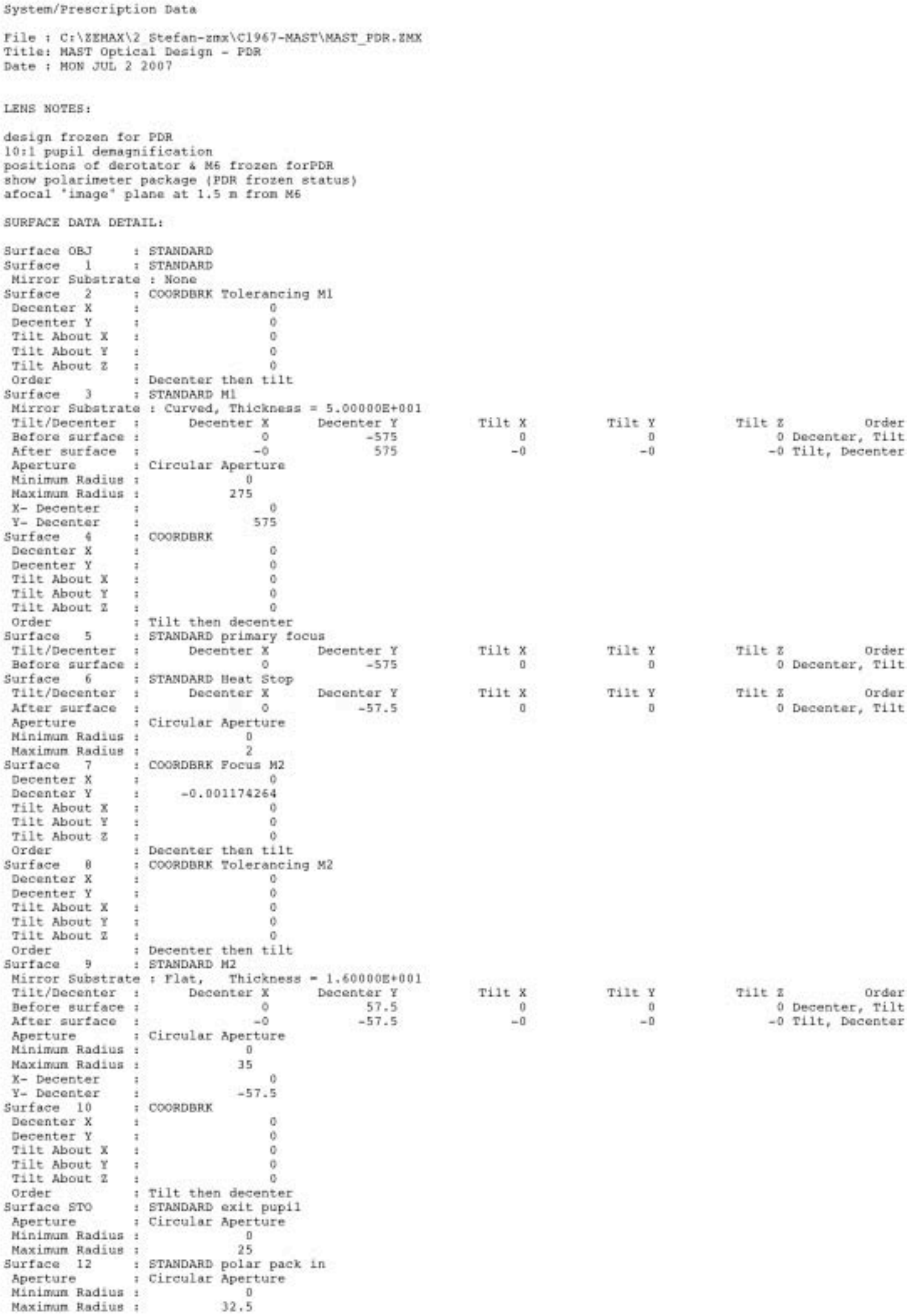

```
System/Prescription Data

File : C:\ZEMAX\2 Stefan-zmx\C1967-MAST\MAST_PDR.ZMX
Title: MAST Optical Design - PDR
Date : MON JUL 2 2007


LENS NOTES:

design frozen for PDR
10:1 pupil demagnification
positions of derotator & M6 frozen forPDR
show polarimeter package (PDR frozen status)
afocal "image" plane at 1.5 m from M6

SURFACE DATA DETAIL:

Surface OBJ     : STANDARD
Surface   1     : STANDARD
 Mirror Substrate : None
Surface   2     : COORDBRK Tolerancing M1
 Decenter X     :                0
 Decenter Y     :                0
 Tilt About X   :                0
 Tilt About Y   :                0
 Tilt About Z   :                0
 Order          : Decenter then tilt
Surface   3     : STANDARD M1
 Mirror Substrate : Curved, Thickness = 5.00000E+001
 Tilt/Decenter  :       Decenter X      Decenter Y          Tilt X          Tilt Y          Tilt Z          Order
 Before surface :                0            -575               0               0               0 Decenter, Tilt
 After surface  :               -0             575              -0              -0              -0 Tilt, Decenter
 Aperture       : Circular Aperture
 Minimum Radius :             0
 Maximum Radius :           275
 X- Decenter    :                0
 Y- Decenter    :              575
Surface   4     : COORDBRK
 Decenter X     :                0
 Decenter Y     :                0
 Tilt About X   :                0
 Tilt About Y   :                0
 Tilt About Z   :                0
 Order          : Tilt then decenter
Surface   5     : STANDARD primary focus
 Tilt/Decenter  :       Decenter X      Decenter Y          Tilt X          Tilt Y          Tilt Z          Order
 Before surface :                0            -575               0               0               0 Decenter, Tilt
Surface   6     : STANDARD Heat Stop
 Tilt/Decenter  :       Decenter X      Decenter Y          Tilt X          Tilt Y          Tilt Z          Order
 After surface  :                0           -57.5               0               0               0 Decenter, Tilt
 Aperture       : Circular Aperture
 Minimum Radius :             0
 Maximum Radius :             2
Surface   7     : COORDBRK Focus M2
 Decenter X     :                0
 Decenter Y     :     -0.001174264
 Tilt About X   :                0
 Tilt About Y   :                0
 Tilt About Z   :                0
 Order          : Decenter then tilt
Surface   8     : COORDBRK Tolerancing M2
 Decenter X     :                0
 Decenter Y     :                0
 Tilt About X   :                0
 Tilt About Y   :                0
 Tilt About Z   :                0
 Order          : Decenter then tilt
Surface   9     : STANDARD M2
 Mirror Substrate : Flat,   Thickness = 1.60000E+001
 Tilt/Decenter  :       Decenter X      Decenter Y          Tilt X          Tilt Y          Tilt Z          Order
 Before surface :                0            57.5               0               0               0 Decenter, Tilt
 After surface  :               -0           -57.5              -0              -0              -0 Tilt, Decenter
 Aperture       : Circular Aperture
 Minimum Radius :             0
 Maximum Radius :            35
 X- Decenter    :                0
 Y- Decenter    :            -57.5
Surface  10     : COORDBRK
 Decenter X     :                0
 Decenter Y     :                0
 Tilt About X   :                0
 Tilt About Y   :                0
 Tilt About Z   :                0
 Order          : Tilt then decenter
Surface STO     : STANDARD exit pupil
 Aperture       : Circular Aperture
 Minimum Radius :             0
 Maximum Radius :            25
Surface  12     : STANDARD polar pack in
 Aperture       : Circular Aperture
 Minimum Radius :             0
 Maximum Radius :          32.5
```

Figure 2: ZEMAX® Optical Prescription data - Surface Data Detail (a)

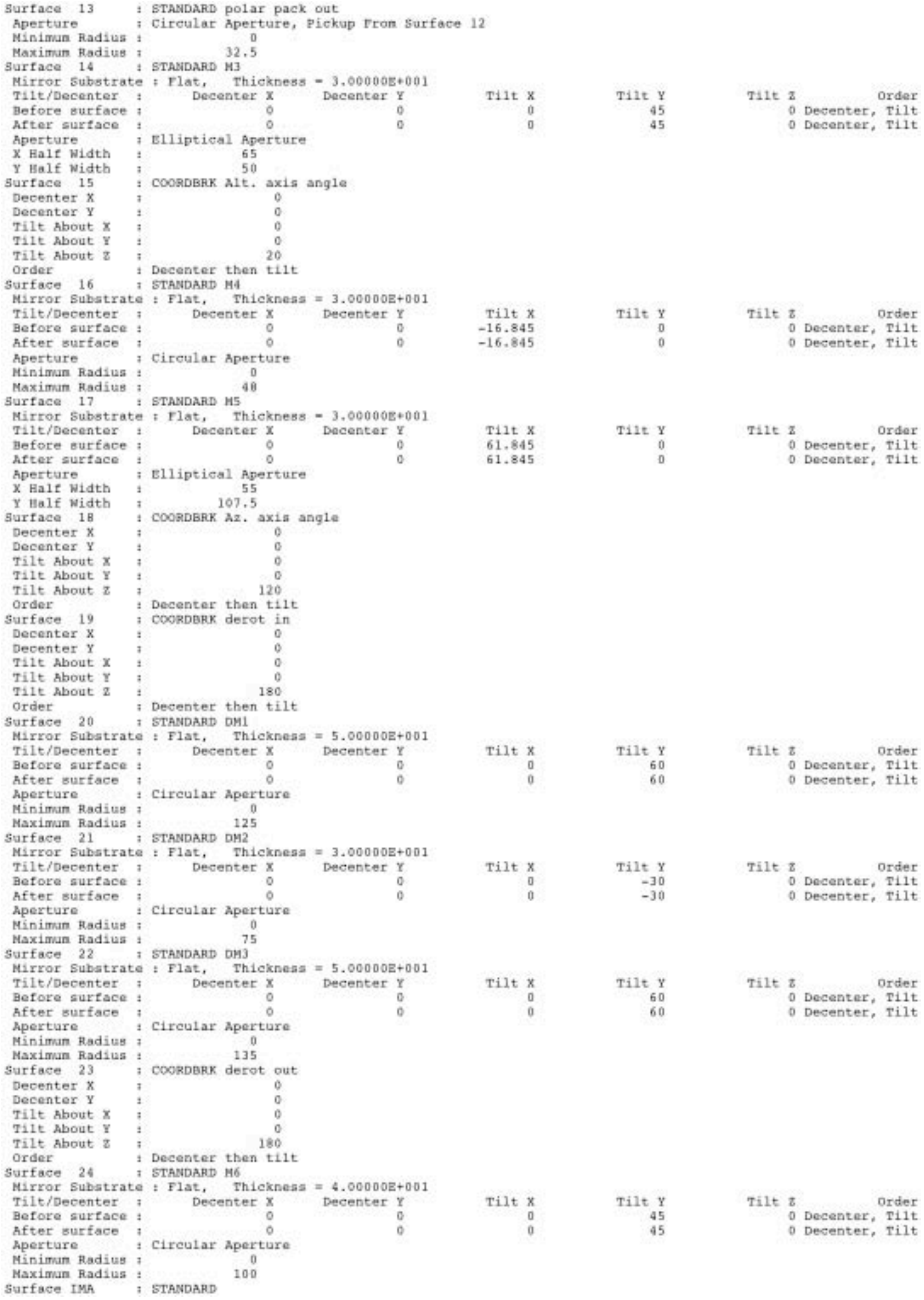

```
Surface  13      : STANDARD polar pack out
 Aperture        : Circular Aperture, Pickup From Surface 12
 Minimum Radius :          0
 Maximum Radius :       32.5
Surface  14      : STANDARD M3
 Mirror Substrate : Flat,   Thickness = 3.00000E+001
 Tilt/Decenter  :      Decenter X      Decenter Y          Tilt X          Tilt Y          Tilt Z          Order
 Before surface :               0               0               0              45               0 Decenter, Tilt
 After surface  :               0               0               0              45               0 Decenter, Tilt
 Aperture        : Elliptical Aperture
 X Half Width    :          65
 Y Half Width    :          50
Surface  15      : COORDBRK Alt. axis angle
 Decenter X      :              0
 Decenter Y      :              0
 Tilt About X    :              0
 Tilt About Y    :              0
 Tilt About Z    :             20
 Order           : Decenter then tilt
Surface  16      : STANDARD M4
 Mirror Substrate : Flat,   Thickness = 3.00000E+001
 Tilt/Decenter  :      Decenter X      Decenter Y          Tilt X          Tilt Y          Tilt Z          Order
 Before surface :               0               0         -16.845               0               0 Decenter, Tilt
 After surface  :               0               0         -16.845               0               0 Decenter, Tilt
 Aperture        : Circular Aperture
 Minimum Radius :          0
 Maximum Radius :         40
Surface  17      : STANDARD M5
 Mirror Substrate : Flat,   Thickness = 3.00000E+001
 Tilt/Decenter  :      Decenter X      Decenter Y          Tilt X          Tilt Y          Tilt Z          Order
 Before surface :               0               0          61.845               0               0 Decenter, Tilt
 After surface  :               0               0          61.845               0               0 Decenter, Tilt
 Aperture        : Elliptical Aperture
 X Half Width    :          55
 Y Half Width    :       107.5
Surface  18      : COORDBRK Az. axis angle
 Decenter X      :              0
 Decenter Y      :              0
 Tilt About X    :              0
 Tilt About Y    :              0
 Tilt About Z    :            120
 Order           : Decenter then tilt
Surface  19      : COORDBRK derot in
 Decenter X      :              0
 Decenter Y      :              0
 Tilt About X    :              0
 Tilt About Y    :              0
 Tilt About Z    :            180
 Order           : Decenter then tilt
Surface  20      : STANDARD DM1
 Mirror Substrate : Flat,   Thickness = 5.00000E+001
 Tilt/Decenter  :      Decenter X      Decenter Y          Tilt X          Tilt Y          Tilt Z          Order
 Before surface :               0               0               0              60               0 Decenter, Tilt
 After surface  :               0               0               0              60               0 Decenter, Tilt
 Aperture        : Circular Aperture
 Minimum Radius :          0
 Maximum Radius :        125
Surface  21      : STANDARD DM2
 Mirror Substrate : Flat,   Thickness = 3.00000E+001
 Tilt/Decenter  :      Decenter X      Decenter Y          Tilt X          Tilt Y          Tilt Z          Order
 Before surface :               0               0               0             -30               0 Decenter, Tilt
 After surface  :               0               0               0             -30               0 Decenter, Tilt
 Aperture        : Circular Aperture
 Minimum Radius :          0
 Maximum Radius :         75
Surface  22      : STANDARD DM3
 Mirror Substrate : Flat,   Thickness = 5.00000E+001
 Tilt/Decenter  :      Decenter X      Decenter Y          Tilt X          Tilt Y          Tilt Z          Order
 Before surface :               0               0               0              60               0 Decenter, Tilt
 After surface  :               0               0               0              60               0 Decenter, Tilt
 Aperture        : Circular Aperture
 Minimum Radius :          0
 Maximum Radius :        135
Surface  23      : COORDBRK derot out
 Decenter X      :              0
 Decenter Y      :              0
 Tilt About X    :              0
 Tilt About Y    :              0
 Tilt About Z    :            180
 Order           : Decenter then tilt
Surface  24      : STANDARD M6
 Mirror Substrate : Flat,   Thickness = 4.00000E+001
 Tilt/Decenter  :      Decenter X      Decenter Y          Tilt X          Tilt Y          Tilt Z          Order
 Before surface :               0               0               0              45               0 Decenter, Tilt
 After surface  :               0               0               0              45               0 Decenter, Tilt
 Aperture        : Circular Aperture
 Minimum Radius :          0
 Maximum Radius :        100
Surface IMA      : STANDARD
```

Figure 3: ZEMAX® Optical Prescription data - Surface Data Detail (b)

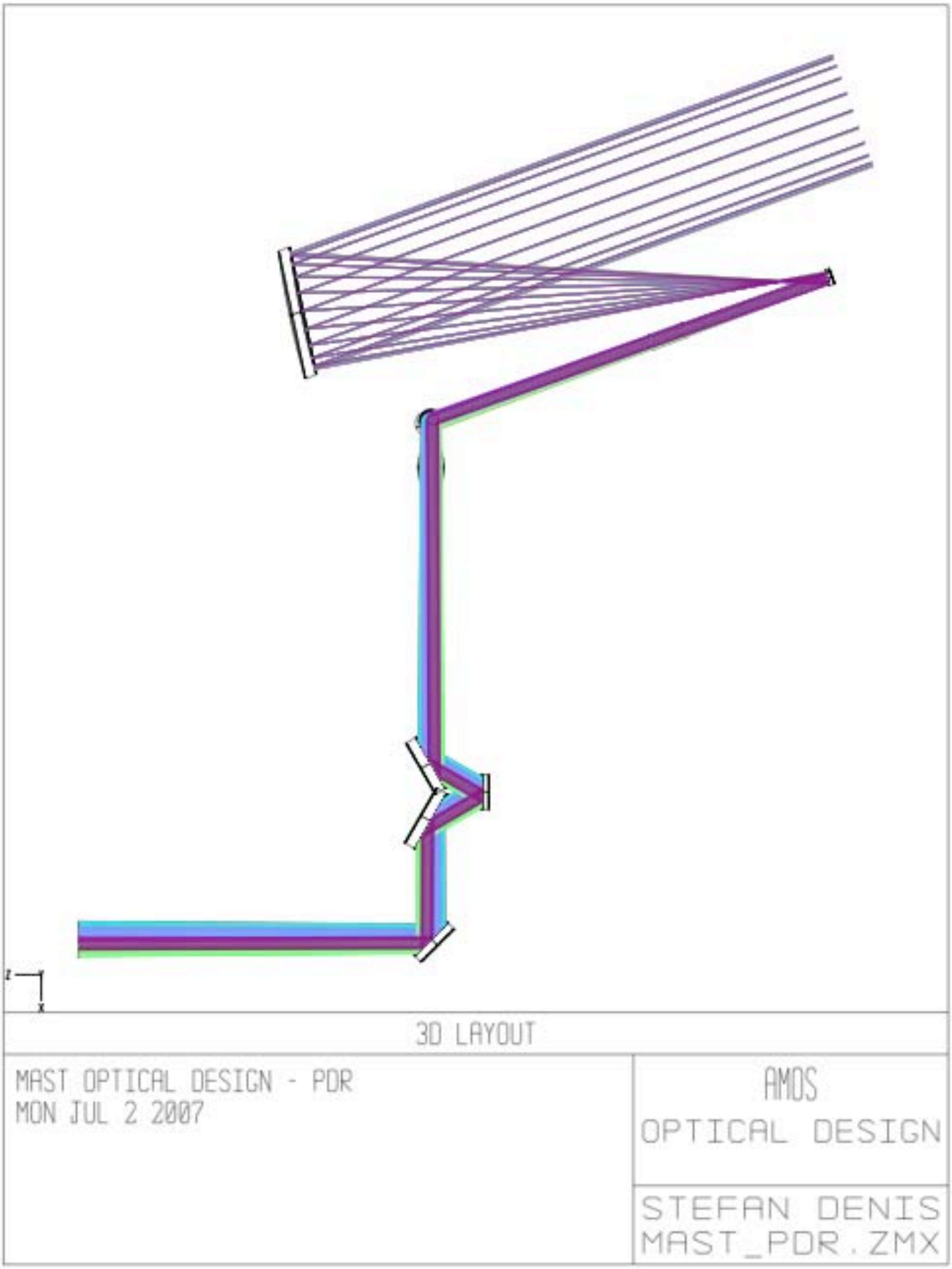

Figure 4: 3D layout with axes at 20° (Alt.) - 180° (Az.)

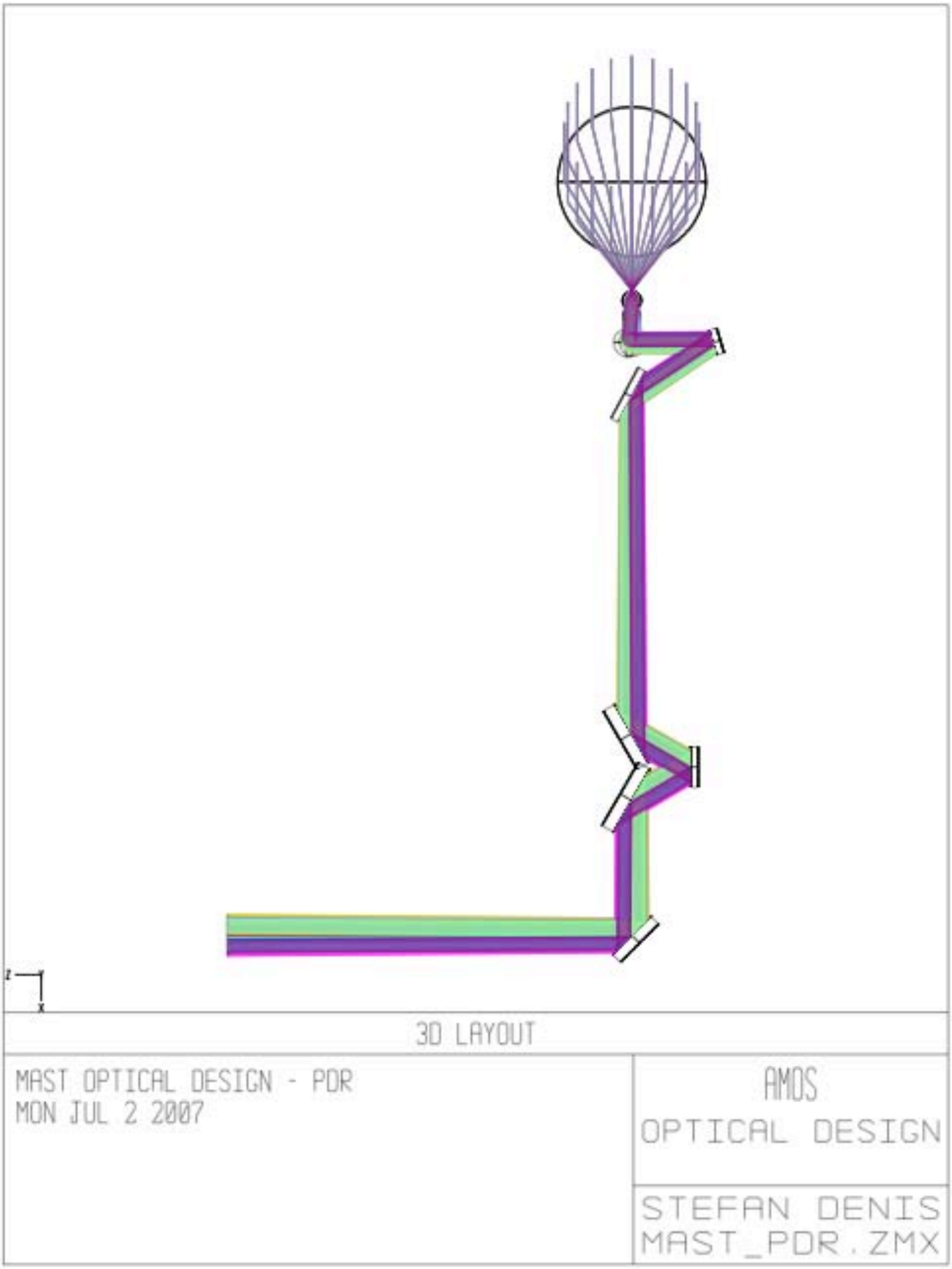

Figure 5: 3D layout with axes at 5° (Alt.) - 90° (Az.)

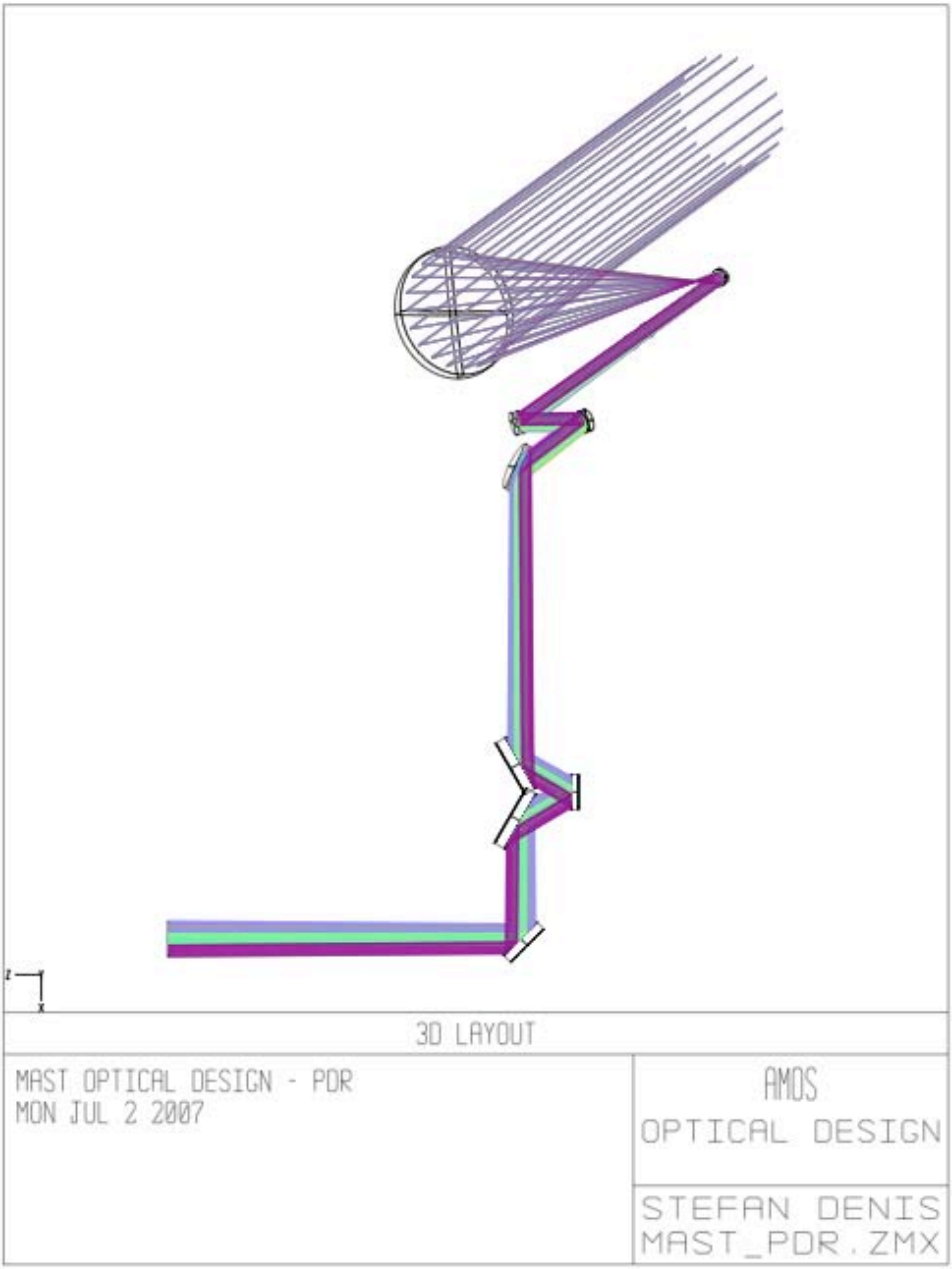

Figure 6: 3D layout with axes at 20° (Alt.) - 120° (Az.)

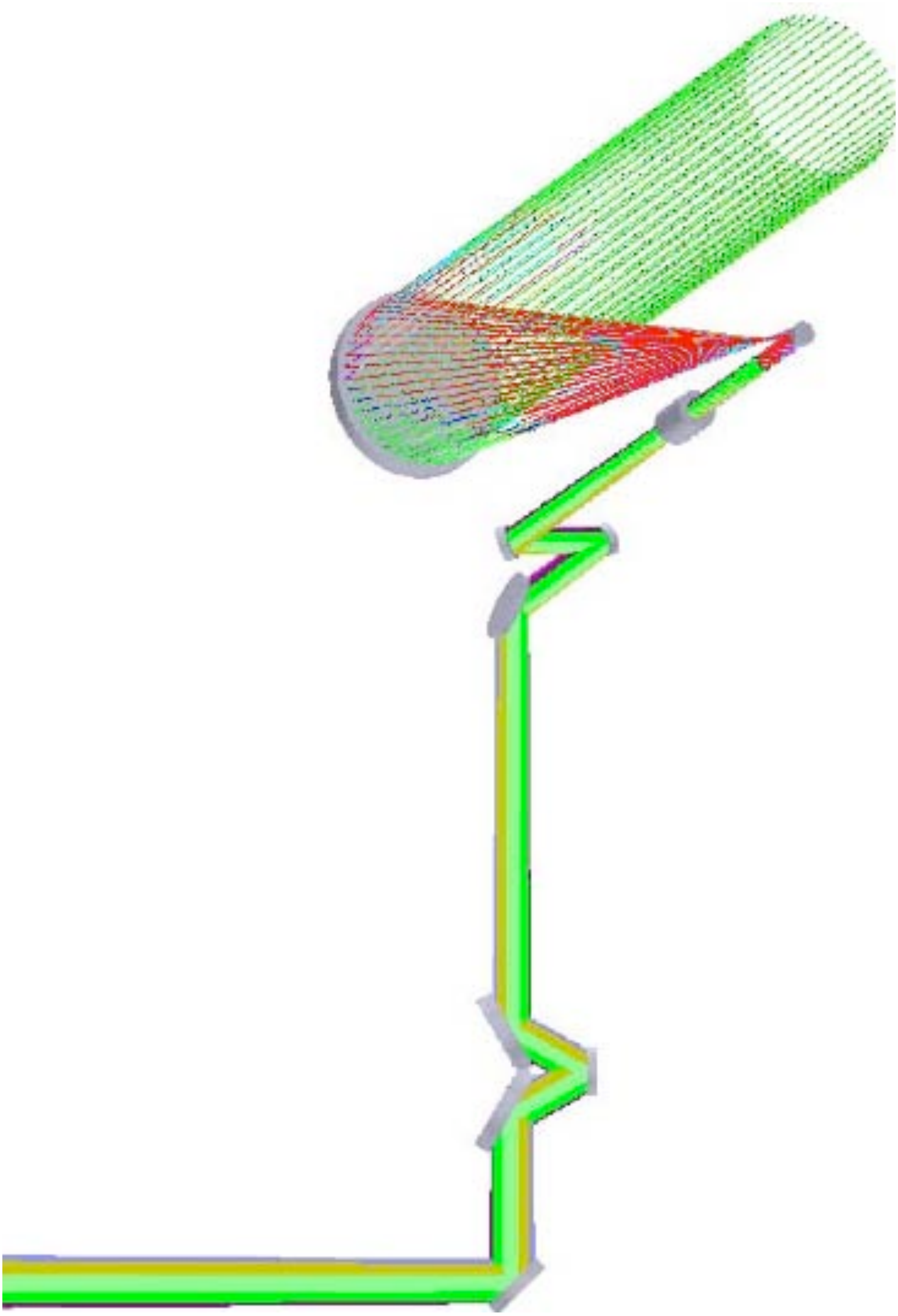

Figure 7: shaded model with axes at 20° (Alt.) & 180° (Az.)

Figure 8: alternate shaded model view with axes at 50° (Alt.) & 150° (Az.)

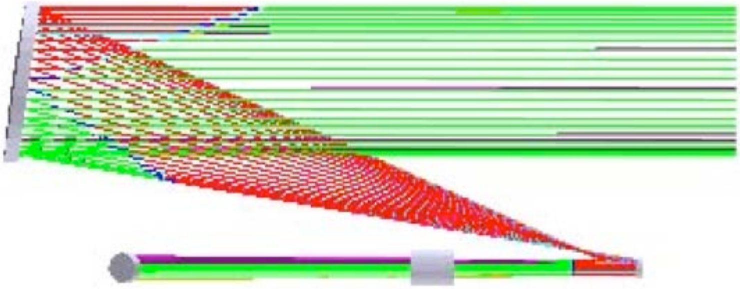

Figure 9: close view of tube optics (shaded model)

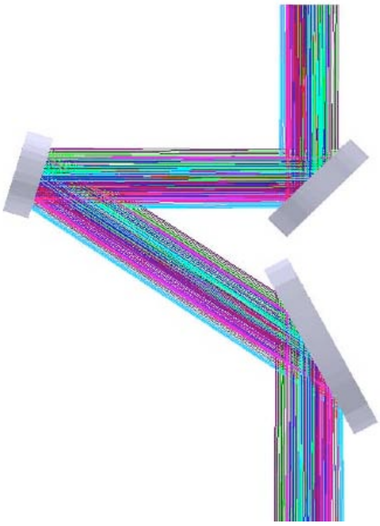

Figure 10: close views of Coudé/fork optics (shaded model)

Figures above show almost all the optical design aspects mentioned in this document, among which the following ones can be outlined:

- the telescope's optical sequence (§.5.1, see Figure 4 to Figure 8);
- the afocal configuration and pupil demagnification (§.5.2 and §.5.3, see Figure 9);
- the output pupil (§.5.4, see Figure 7 & Figure 9 – refer to beam colour change);
- the polarimeter package (§.11.2 & §.5.2, see Figure 7 to Figure 9 where it is sketched by a Ø 120 mm by 150 mm long cylinder);
- the 2-mirrors Coudé configuration with M3 (§.5.5, see Figure 10 - M3 rotates about the horizontal Alt. axis corresponding to the beam propagation between M3 and M4);
- the optical field derotator (§.5.6, see Figure 4 to Figure 8).

6.2 OPTIMISATION PROCESS

The optimisation process for such a simple configuration is limited to secondary mirror's position (focus and decentre) with respect to the RMS WFE over the FOV.

One can notice that the position is nominal (zero thickness value after "primary focus" surface) when looking only at the on-axis wavefront error, while some refocus is required (along with corresponding small lateral repositioning) to optimise over the whole field. In that case, the defocus value is 4 μm.

6.3 PRELIMINARY TOLERANCING

A preliminary tolerance analysis is useful to see the sensitivity of the performances with respect to some telescope's optical parameters.

The preliminary optical tolerance analysis uses the following scheme:

- definition of a useful and comprehensive optical model;
- identification of performance criteria;
- identification of possible contributors to performance degradation;
- identification of possible compensators parameters to relax tolerancing;
- inverse sensitivities analysis with allowed maximum increment or maximum value for the identified performance criteria;
- definition of contributors tolerances based on information taken from above analysis;
- tolerance (sensitivity) analysis.

The last step is more related to detailed tolerance analysis and can be avoided in the preliminary tolerance analysis.

Optical Model for Tolerance Analysis:

The optical model for the tolerance analysis is the one presented above (§.6.1 & §.6.2). It can be adapted to a specific analysis task if required, although it already includes tolerancing surfaces features.

Performance Criteria:

The principal performance criterion is once again the RMS WFE. Other performance criteria such as chief ray angle can also be of interest. This is of marginal interest here.

Contributors:

The identified contributors are the following ones:

- primary mirror:
  - radius of curvature (parent parabola);
  - conic constant (parent parabola).
- secondary mirror:
  - radius of curvature (parent parabola);
  - conic constant (parent parabola);
  - axial (Z or focus) distance from primary mirror;
  - lateral (X and Y) decentres from common afocal axis;
  - transverse (ϑ_x and ϑ_y) tilts with respect to common afocal axis;
  - axial (ϑ_z) rotation about common afocal axis (due to off-axis asymmetry).
- flat folding mirrors (M3 to M6, including derotator mirrors):
  - flatness;
  - ϑ_x and ϑ_y tilts[11].

Primary mirror's tilts and decentres are not considered as contributors since its parent parabola's axis defines the common afocal axis reference. However, a ten times tighter sensitivity with respect to the secondary mirror's one is expected.

One could note that the figuring errors (mirrors deformation) are not accounted in the contributors list. This is because it is difficult and time demanding, as well as not totally accurate and sure, to perform a preliminary ZEMAX® tolerance analysis with these. Figuring errors (from both manufacturing and thermo-mechanical issues) are preferably accounted and managed through a wavefront error budget (§.7.2 and [RD07]).

Compensators:

Possible compensators are mainly linked to the position (focus and decentres) and orientation (tilts) adjustment capabilities of the secondary mirror (through an hexapod). They are used as compensators rather than as identified contributors in some analyses, while they are used as contributors and not as compensators in other analyses.

---

[11] this obviously has no impact on the wavefront error, but can contribute on other criteria tolerancing

Inverse Sensitivities:

Inverse sensitivities analyses start from supposed large tolerance values for the identified contributors that would obviously explode the performance criterion. If not, the contributor is identified as not sensitive.

An allowed performance criterion's degradation is entered, generally corresponding to an allocated contributive part in the overall error budget for this performance criterion.

The optical software then tighten each contributor's tolerance, down from the initial large one, in order to fit within the entered allowed degradation of the performance criterion, while possibly relaxing the tolerance thanks to identified compensators.

Parameters Tolerance Assessment:

Tolerance for each contributor is assessed, based on the inverse sensitivities analysis. Contributors that are identified as not or poorly sensitive are first removed from the process (or given a comfortably large tolerance value).

Then, if N sensitive contributors are expected to impact independently the same performance criterion by the allocated degradation (supposed to be the degradation for all contributors), each individual assessed tolerance obtained from the inverse sensitivities is again tightened by a factor that is about the square-root of N (√N).

The tolerance obtained for each contributor is then defined as the preliminary tolerance. The set of preliminary tolerances is subject to be used in a more detailed and complete tolerance (sensitivity) analysis.

The following manufacturing preliminary tolerances can be listed:

• primary mirror's radius of curvature:	$\Delta RoC = \pm 5$ mm
• primary mirror's conic constant:	$\Delta K = \pm 2 \cdot 10^{-4}$
• secondary mirror's radius of curvature:	$\Delta RoC = \pm 2$ mm
• secondary mirror's conic constant:	$\Delta K = \pm 2 \cdot 10^{-3}$
• M3 flatness (curvature):	± 0,5 fringes
• M4 flatness (curvature):	± 2,0 fringes
• M5 flatness (curvature):	± 0,7 fringes
• M6 flatness (curvature):	± 1,5 fringes
• DM1 & DM3 flatness (curvature):	± 1,0 fringes
• DM2 flatness (curvature):	± 2,0 fringes

The following alignment preliminary tolerances can be listed:

• secondary mirror's axial position:	± 2 μm
• secondary mirror's decentres:	± 10 μm
• secondary mirror's tilts:	± 10 arcsec
• secondary mirror's axial rotation:	± 30 arcsec

7. PRELIMINARY OPTICAL PERFORMANCE

It is obviously useful in this preliminary optical design report to compare the expected performance from the design with the required performance from the specification. Therefore, a preliminary optical performance assessment is given here according to some requirement aspects.

7.1 BEAM SIZE

Beam size considerations have been fully discussed above in this document (§.5.2). Clearly, the so-called field spread drives the beam size growing along the optical path.

The beam size at output pupil level (50 mm diameter) and at polarimeter package's location (60 mm diameter) is compliant with the requirement.

On the other hand the beam size at the telescope's end (back-end instruments input) is larger than expected. It has been shown however that it is not possible to comply with both requirements (at polarimeter level and at back-end instruments level) at the same time. It has been chosen to comply with polarimeter's requirement while sticking as close as possible to the final beam size requirement.

Beam size at 1,5 meter from the back-end folding mirror (M6) towards the back-end instruments is about 155 mm diameter.

The following figures (Figure 11 to Figure 18) show the field spread of the beam for the useful 6 arcmin field of view. Expanding overall footprint can be seen, while the collimated single field point beam size is constant all along.

One can especially notice the following points:

- field rays are pretty well superposed on the primary mirror footprint (Figure 11) and are perfectly well superposed on the output pupil footprint (Figure 14);
- aberrated primary image on the heat-stop footprint (Figure 12) shows the slightly oversized field-stop (i.e. heat-stop hole) to accommodate for aberrated throughput;
- field footprints on secondary mirror (Figure 13) are only slightly spread;
- growing field spread can be seen from decreasing field footprints overlapping with respect to each other from M3 to M6 (Figure 15 to Figure 17), and again increased on "image" footprint (Figure 18) at 1,5 meter from M6 towards back-end instruments.

Obviously, some indication regarding the interface with the back-end instruments is missing in the specification documents. This should be considered in view of the beam size aspect, while taking care of mechanical aspects (ground interface structure, cable-wrap support, ...). This should be discussed in the frame of the PDR.

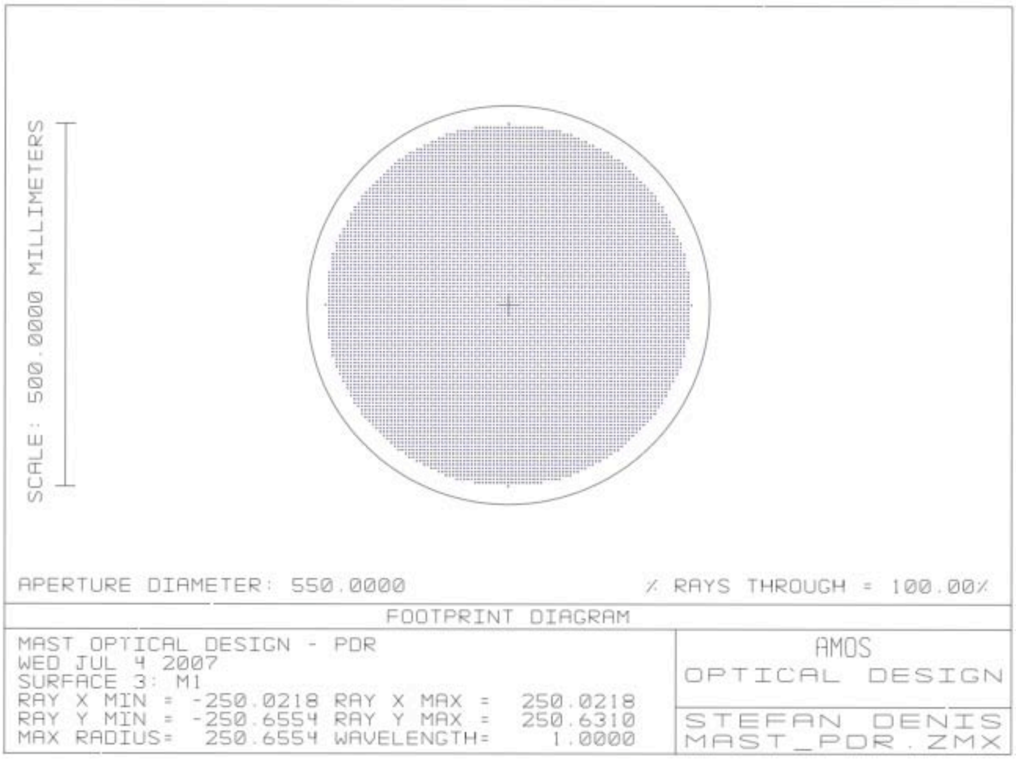

```
APERTURE DIAMETER: 550.0000                  % RAYS THROUGH = 100.00%
MAST OPTICAL DESIGN - PDR
WED JUL 4 2007
SURFACE 3: M1
RAY X MIN = -250.0218 RAY X MAX =  250.0218
RAY Y MIN = -250.6554 RAY Y MAX =  250.6310
MAX RADIUS=  250.6554 WAVELENGTH=    1.0000
```

Figure 11: beam footprint on M1

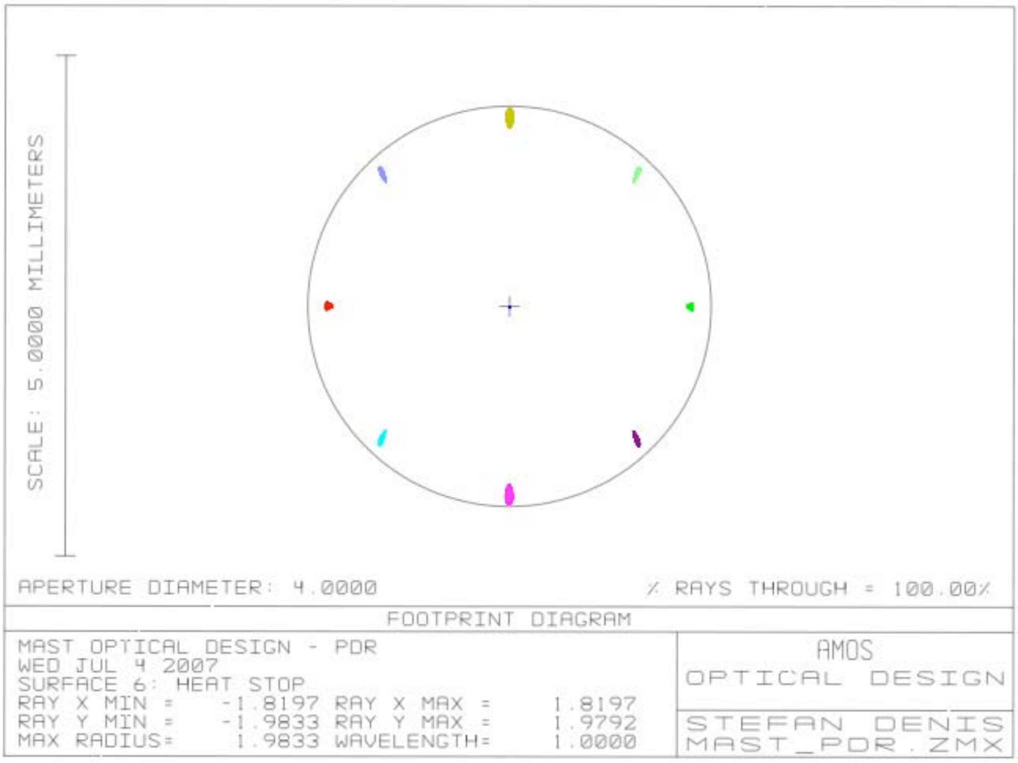

```
APERTURE DIAMETER: 4.0000                    % RAYS THROUGH = 100.00%
MAST OPTICAL DESIGN - PDR
WED JUL 4 2007
SURFACE 6: HEAT STOP
RAY X MIN =   -1.8197 RAY X MAX =     1.8197
RAY Y MIN =   -1.9833 RAY Y MAX =     1.9792
MAX RADIUS=    1.9833 WAVELENGTH=     1.0000
```

Figure 12: beam footprint at heat-stop (primary focus) level

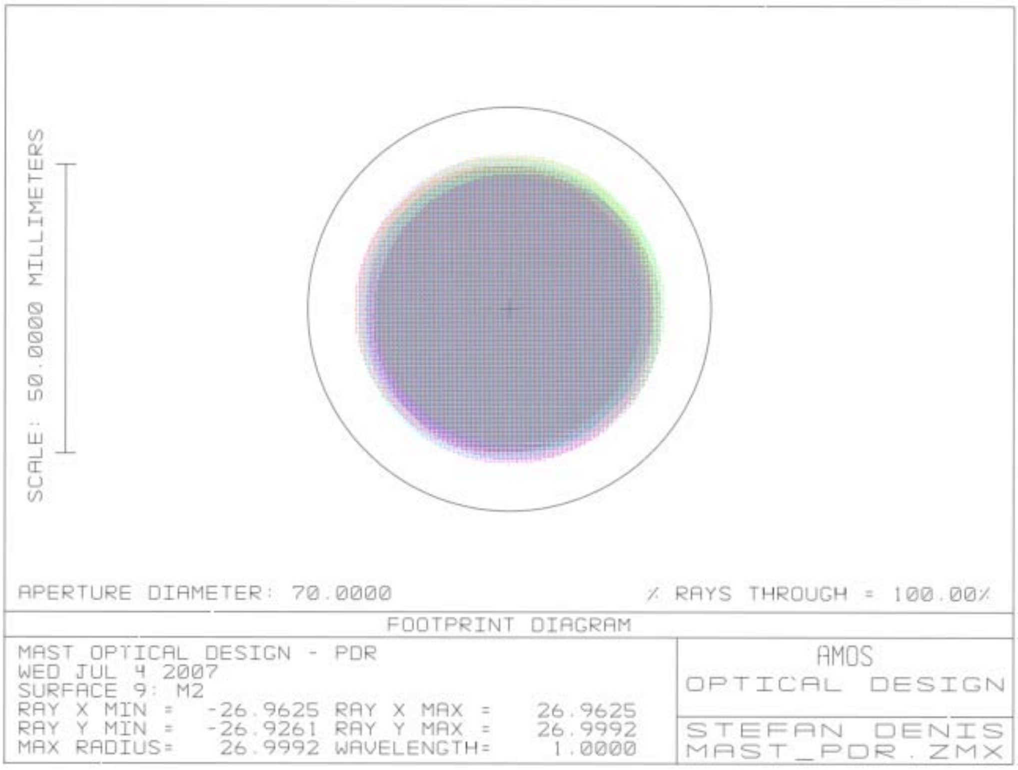

Figure 13: beam footprint on M2

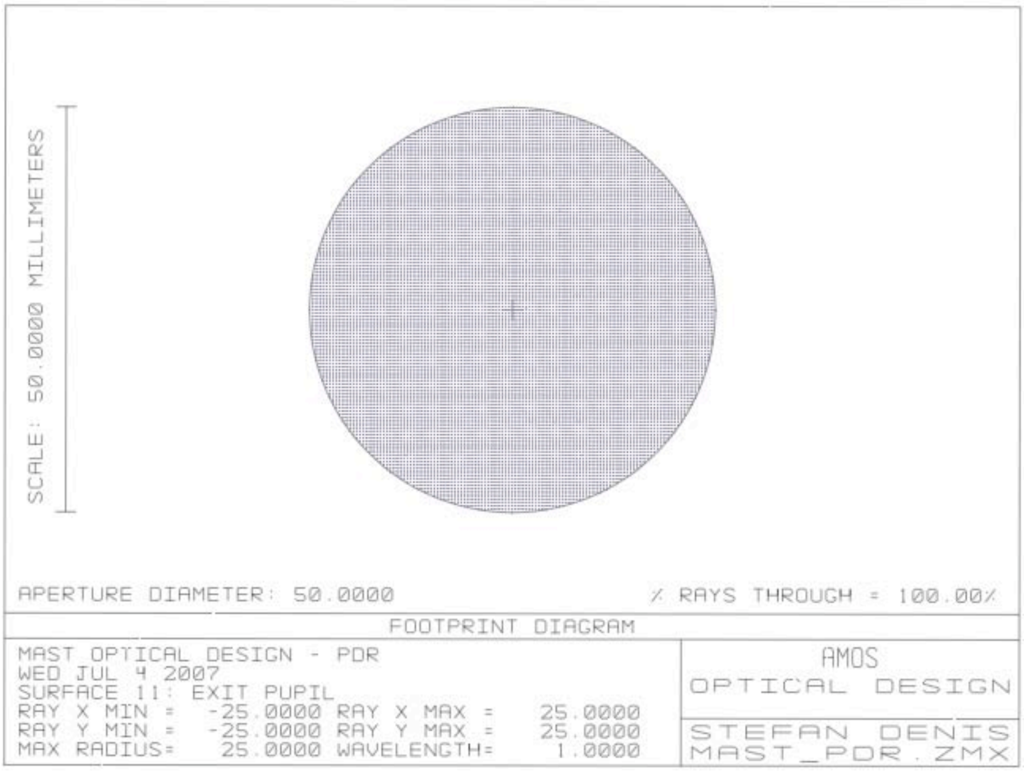

Figure 14: beam footprint at output pupil level

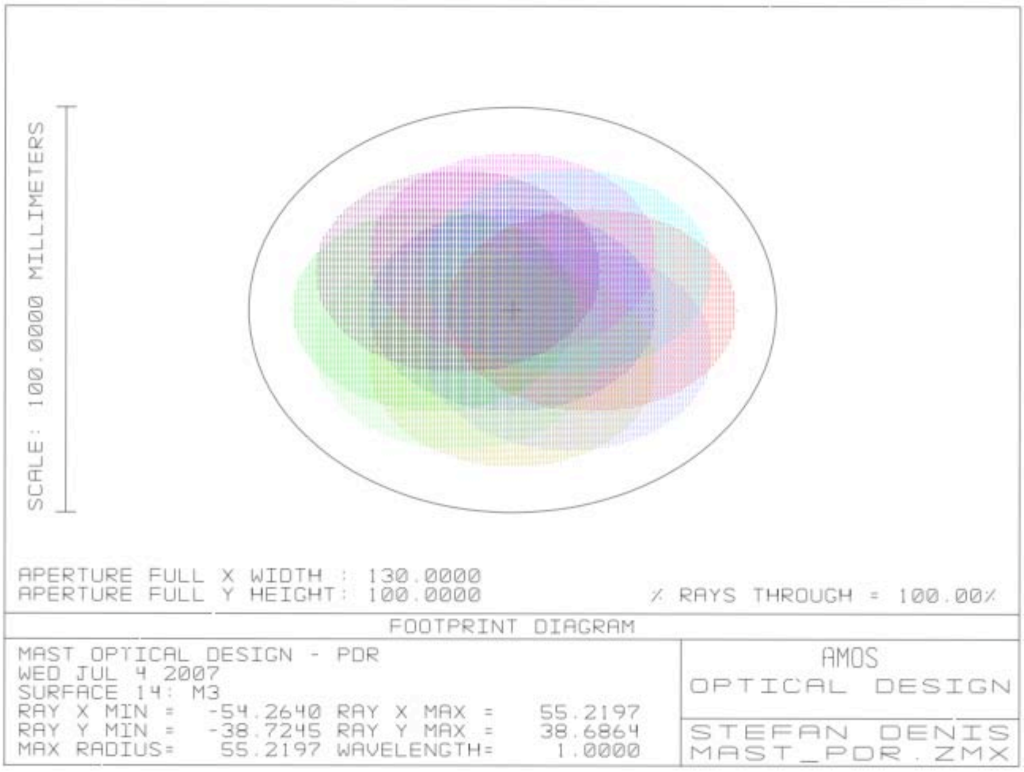

```
APERTURE FULL X WIDTH : 130.0000
APERTURE FULL Y HEIGHT: 100.0000          % RAYS THROUGH = 100.00%
MAST OPTICAL DESIGN - PDR
WED JUL 4 2007
SURFACE 14: M3
RAY X MIN =   -54.2640 RAY X MAX =    55.2197
RAY Y MIN =   -38.7245 RAY Y MAX =    38.6864
MAX RADIUS=    55.2197 WAVELENGTH=     1.0000
```

Figure 15: beam footprint on M3

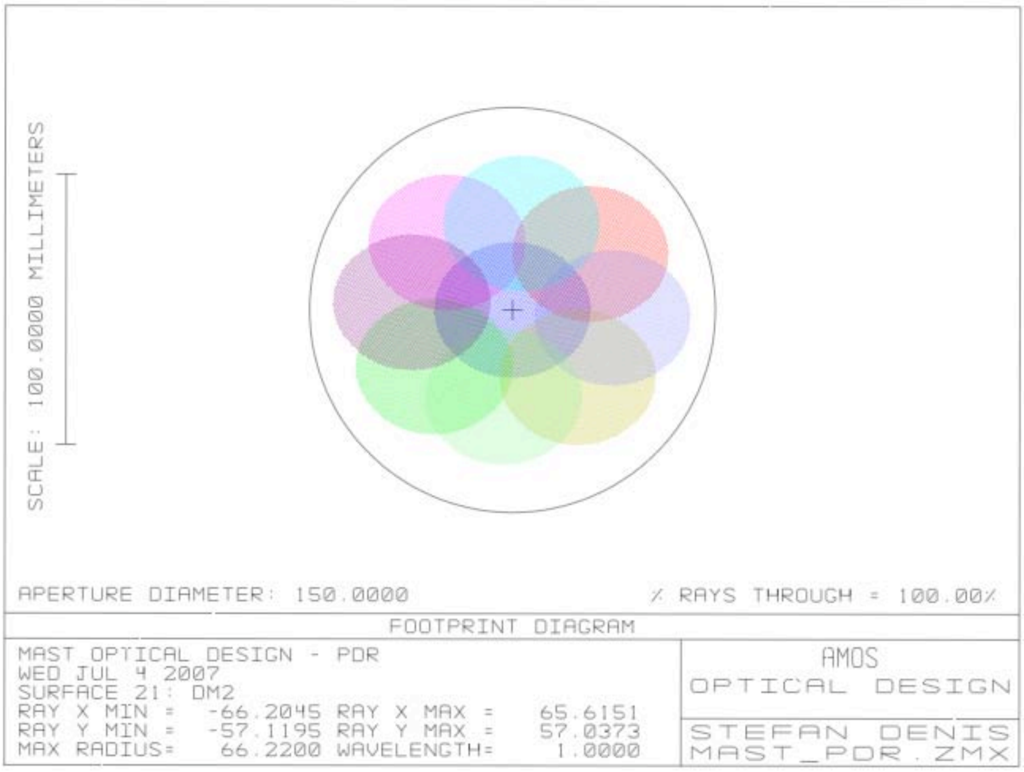

```
APERTURE DIAMETER: 150.0000               % RAYS THROUGH = 100.00%
MAST OPTICAL DESIGN - PDR
WED JUL 4 2007
SURFACE 21: DM2
RAY X MIN =   -66.2045 RAY X MAX =    65.6151
RAY Y MIN =   -57.1195 RAY Y MAX =    57.0373
MAX RADIUS=    66.2200 WAVELENGTH=     1.0000
```

Figure 16: beam footprint on DM2

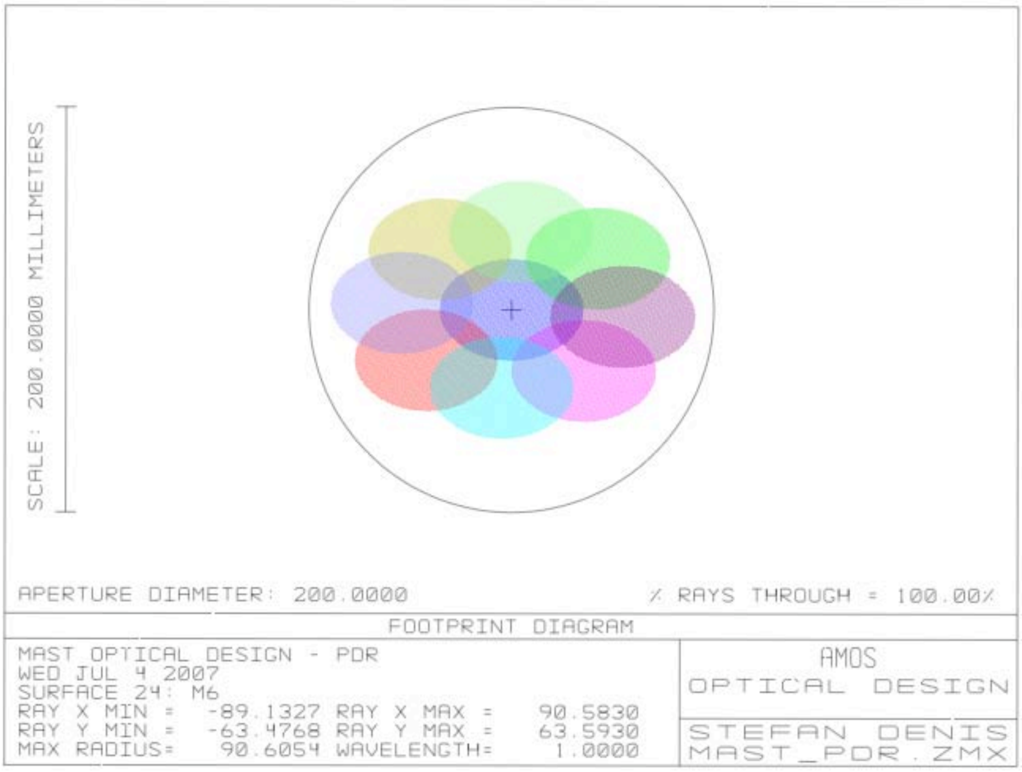

Figure 17: beam footprint on M6

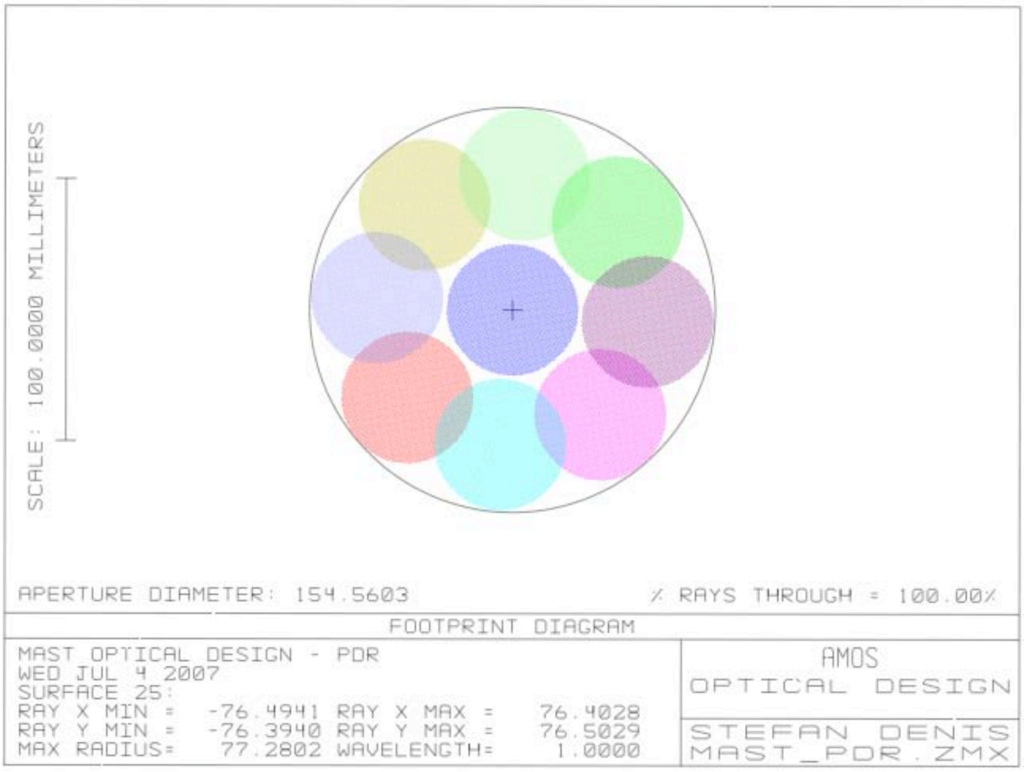

Figure 18: beam footprint at 1,5 meter from M6 towards back-end instruments

7.2 WAVEFRONT ERROR

The wavefront error requirement is considered, among the optical requirements, as the most critical and important one. The main wavefront error requirement is the root mean squared one (RMS WFE), while the peak-to-valley requirement (PTV WFE) is expected from individual mirrors manufacturing.

A preliminary RMS WFE budget is presented here, which is also part of [RD07].

The requirement for the whole telescope's RMS WFE (at 632,8 nm) is:

- $\lambda/12$ on-axis
- $\lambda/10$ over the field of view

The PTV WFE requirement (at 632,8 nm) is $\lambda/4$.

The overall budget is easily split into several identified contributors, which correspond to different impacting contributions to the wavefront deformation as follows:

- design performance (residual error after design optimisation);
- optical manufacturing (geometrical parameters, figuring error);
- thermo-mechanical deformation (mainly due to supporting cell);
- global mirrors deformation (incl. the two above), accounting folding angle impact;
- misalignment induced wavefront error (initial alignment, operational misalignment);
- environment induced error (not directly addressed by operational misalignment).

These contributors are supposed to be independent from each other, and are thus summed in a root sum square way to obtain the global RMS WFE. This budgeted global RMS WFE should leave some place for contingency with respect to the requirement.

Design Contribution:

The optimisation process, based on RMS WFE performance, has shown that a slight "defocus" - by 4 μm - of the secondary mirror enhance the global RMS WFE distribution over the 6 arcmin FOV. Figure 19 and Figure 20 below illustrate this.

Figure 19 shows that a nominal distance of 2,2 m between M1 and M2 vertices nulls the WFE at NFOV (null field) but gives an amount of about 20 nm RMS at FFOV (full field).

Figure 20 shows that increasing the nominal separation (or "defocusing" M2) by 4 μm globally enhances the overall RMS WFE over the field, with a RMS WFE value at FFOV decreased to about 10 nm, at the price of a NFOV RMS WFE increased to 10 nm.

Note that RMS WFE is given in waves at a wavelength of 1 μm. This makes it easy to read the graphs directly in nm, independently from the wavelength[12]. It also clearly shows that the specification calls for a RMS WFE performance slightly better than the diffraction limit at 1 μm (i.e. about 72 nm).

---

[12] at 632,8 nm, $\lambda/12$ corresponds to 52,7 nm (or 0,053 μm) and $\lambda/10$ corresponds to 63,3 nm (or 0,063 μm)

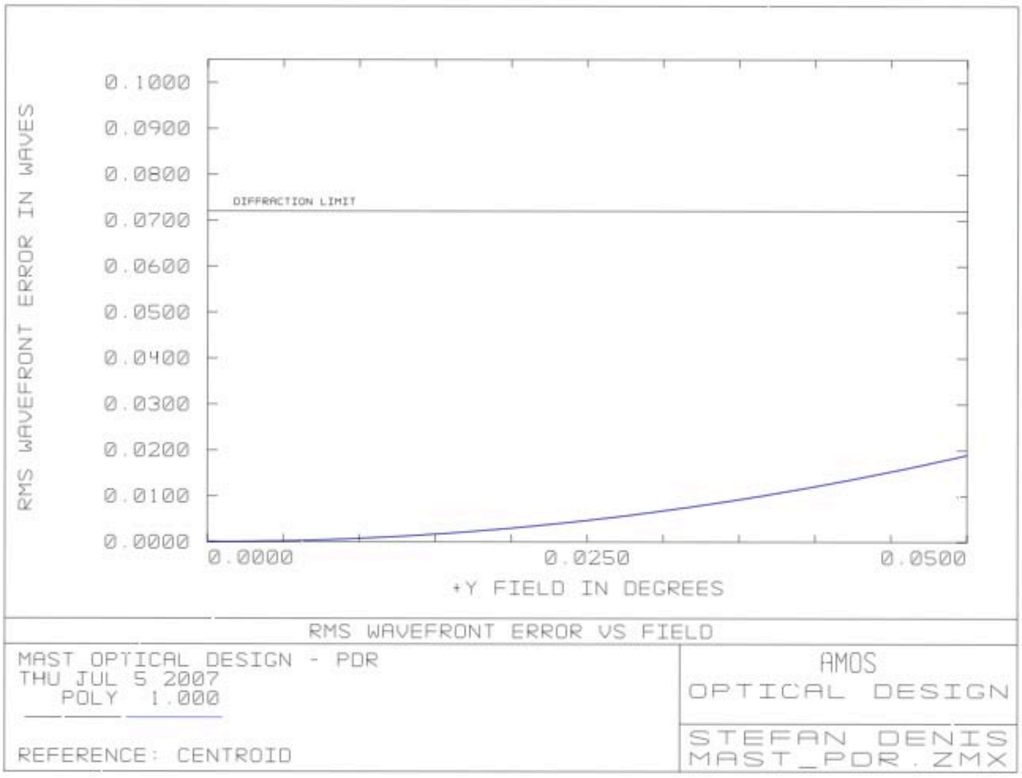

Figure 19: RMS WFE curve vs. FOV - without optimisation over FOV

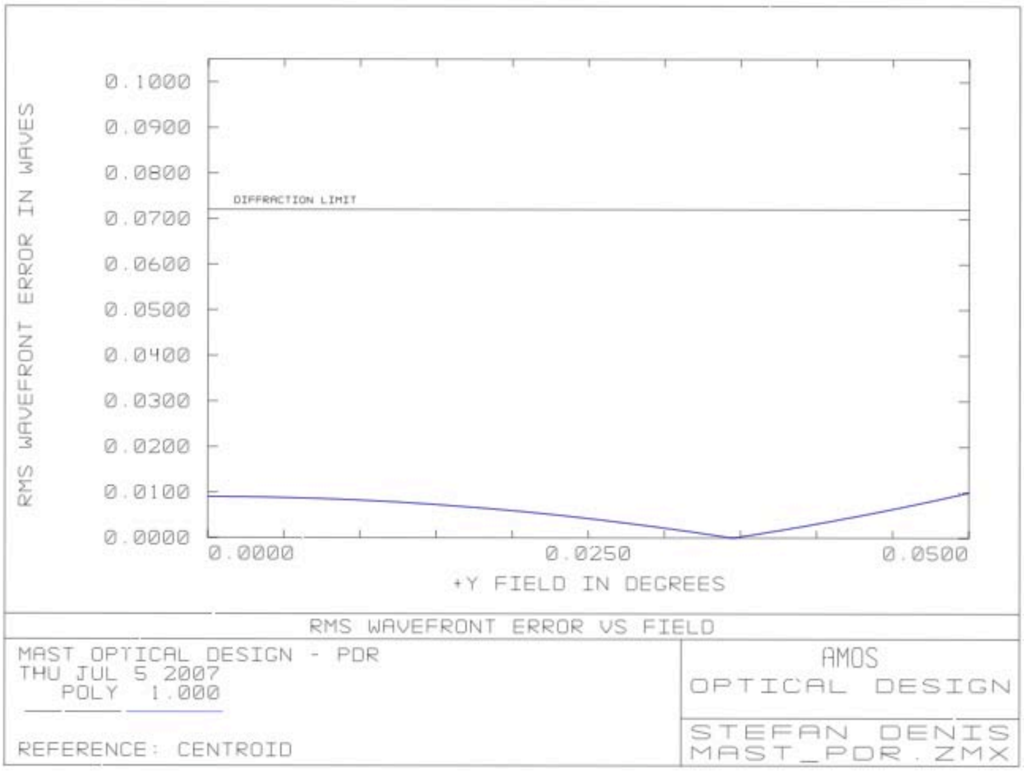

Figure 20: RMS WFE curve vs. FOV - with optimisation over FOV

Optical Manufacturing:

Preliminary tolerances established above (§.6.3) on mirrors geometrical parameters (radius of curvature, conic constant, flatness) account for the following optical manufacturing (geometrical parameters) contribution to the global RMS WFE budget:

• for the afocal system's mirror (M1 and M2):	5 nm RMS WFE
• for each flat mirror:	2 nm RMS WFE
• for the WFS plate:	no specific geometrical contribution – included in figuring below

Besides manufacturing errors on the geometrical parameters, figuring errors also impact the global RMS WFE budget as optical manufacturing error contribution. The preliminary optical manufacturing contributions budget regarding figuring errors is established as follows, to account for manufacturing complexity on some mirrors:

• for the primary mirror (M1):	20 nm RMS WFE
• for the secondary mirror (M2):	16 nm RMS WFE
• for each flat mirror:	10 nm RMS WFE
• for the WFS plate (including flatness):	3,5 nm RMS WFE (transmitted)

The above RMS WFE is given for the reflected wavefront under normal incidence (not the operational incidence) for the mirrors[13]. The corresponding surface error (RMS SFE) is half the RMS WFE (except for WFS plate where each SFE is $\sqrt{2} \cdot$ transmitted WFE).

The global optical manufacturing contribution to the RMS WFE budget - not accounting for incidence angles factors – is about 38 nm RMS.

Thermo-Mechanical Deformation:

The supporting cells are optimised to produce only a limited deformation of the mirrors in operating conditions (gravity, temperature). This contribution also includes the thermal effects that could deform the mirrors beside the gravity-induced deformation.

Mirrors surface deformation is comparable to optical manufacturing errors in some way (although generally showing more geometrical distribution and less random errors). Thermo-mechanical deformation is preferably given in surface error (RMS SFE).

The preliminary thermo-mechanical contributions to the RMS WFE budget are established as follows, to account for more complexity on some mirrors:

• for the primary mirror (M1):	7 nm RMS SFE
• for the secondary mirror (M2):	5 nm RMS SFE
• for flat mirror M3, M4, M6 & DM2:	2,5 nm RMS SFE
• for flat mirror M5, DM1 & DM3:	5 nm RMS SFE
• for the WFS plate (including flatness):	5 nm RMS SFE (for each surface)

---

[13] for the transmitted wavefront in the specific case of the WFS plate

The global thermo-mechanical contribution to the RMS WFE budget - not accounting for incidence angles factors – is about 14 nm RMS.

Global Mirrors Deformations:

To account for the impact of total mirrors deformations in the overall RMS WFE budget, one shall RSS add optical manufacturing and thermo-mechanical contributions.

As optical manufacturing (for figuring errors) preferably deals with wavefront errors (WFE) while FEA (for thermo-mechanical deformation) uses more naturally surface errors (SFE), the former contribution is translated in SFE. That way, both can be RSS summed to obtain the overall RMS SFE (with geometrical parameters errors removed).

Then, one should consider that the reflected (or transmitted) wavefront error value induced by a surface error depends on the incidence angle of the beam on the surface.

For a reflecting surface, the following equation is used:

$$WFE_r = SFE \cdot \frac{1 + \cos 2\hat{\imath}}{\cos \hat{\imath}} \qquad \textit{where } \hat{\imath} \textit{ is the incidence angle}$$

Eq. 2 (SFE to WFE$_r$ translation)

For a transmitting surface, the following equation is used (and RSS or budgetary multiplied by √2 for a transmitting plate):

$$WFE_t = SFE \cdot \left(\frac{n}{\cos \hat{\imath}'} - \frac{1}{\cos \hat{\imath}} \right) \qquad \textit{where } n \cdot \sin \hat{\imath}' = \sin \hat{\imath}$$

Eq. 3 (SFE to WFE$_t$ translation)

Finally, the RMS WFE due to geometrical parameters errors (translation given by the tolerance analysis - §.6.3) is added in a RSS way for each mirror.

The optical elements (mirrors and WFS plate) total global contribution, including manufacturing and thermo-mechanical deformation, to the RMS WFE budget - now accounting for incidence angles factors – is about 40 nm RMS.

Misalignment:

A preliminary and provisional budget of 15 nm RMS is assumed for the misalignment contribution to the RMS WFE. This includes initial alignment as well as operational misalignment, and only concerns the afocal part.

This obviously requires some operational on-line alignment corrections. This will be performed thanks to the required M2 mechanism (hexapod – see [RD02], [RD04] and [RD06]). This mechanism could operate:

- in open-loop based on model tables (matrix) established by FEA and/or calibration;
- in closed-loop based on WFS information (Zernike coefficients).

Tolerances have been preliminary defined (§.6.3) according to the 15 nm contribution (RMS WFE) to the global budget. These correspond to the required resolution for the M2 mechanism, including WFS and/or alignment model accuracy.

Environment:

A provisional budget of 10 nm RMS is assumed for the environmental contribution to the RMS WFE. This includes impact of the environment that cannot be modelled to allow for corrections. This has been established based on AMOS experience on other telescope projects.

Wavefront Error Budget and Contingencies:

A preliminary and provisional budget for the RMS WFE performance can be computed, based on the above-mentioned contributions. A RSS summation is performed to benefit from the expected independence of the different contributions[14].

From the above, one can resume the following contributions:

➢ design contribution (RMS WFE)[15]:	10 nm
➢ global mirrors deformation (RMS WFE):	40 nm
➢ alignment contribution (RMS WFE):	15 nm
➢ environment contribution (RMS WFE):	10 nm
RSS preliminary RMS WFE budget:	45 nm

Table 2: RMS WFE Preliminary Budget

The requirement for the RMS WFE from [AD01] and [AD02] is 52,7 nm on-axis and 63,3 over the field of view. Therefore, the above preliminary budget leaves room for a contingency of 27,5 nm and 44,5 nm respectively (RMS WFE) to be added in RSS way to reach the specification. This will allow relaxing some budget contributors, as well as keeping some margin for operational performance.

7.3 TRANSMISSION

Requirements for transmission in [AD01] addresses three different aspects:

- total transmission of the telescope: ≥ 50 % in [400 – 900] nm spectral range
- coating reflectivity for each mirror: ≥ 95 % in [400 – 900] nm spectral range
- coating absorption for each mirror: ≤ 10 % of incident solar flux

This obviously calls for a protected enhanced Ag coating.

---

[14] that budget computation method for RMS WFE has been proved to be valid in the frame of several other telescope projects in the AMOS experience, and is classically accepted

[15] the figure accounted here stands for design residuals after optimisation over the FOV

Although this coating aspect has not been deeply investigated during the preliminary design phase, the preliminary transmission budget is based on two similar Ag coating curves (Figure 21 and Figure 22), obtained from two different suppliers.

Both curves show compliance with individual mirror's reflectivity requirement of 95 % in the [400 – 900] nm spectral range[16]. Moreover, the average reflectivity over most of the [400 – 900] nm spectral range is about 98 %.

One can thus establish a preliminary transmission budget for the whole telescope, based on assumptions taken above from these two curves, as follows:

		minimum	average
M1	:	95%	98%
M2	:	95%	98%
M3	:	95%	98%
M4	:	95%	98%
M5	:	95%	98%
DM1	:	95%	98%
DM2	:	95%	98%
DM3	:	95%	98%
M6	:	95%	98%
WFS P-O	:	85%	96%
WFS AR	:	95%	98%
w/o derotator & WFS Pick-Off plate	*:*	*74%*	*89%*
w/o WFS Pick-Off plate	*:*	*63%*	*83%*
Total	***:***	***50,89%***	***78,44%***
allowed R(P-O) [contingency]	*:*	*16,5%*	*38,8%*

Table 3: Global Transmission Budget

Transmission budget provided in Table 3 shows that compliance to total transmission requirement of 50 % is expected and is not critical. It moreover shows that contingency is sufficient to be comfortable with the required reflectivity for the WFS pick-off.

Obviously, this global transmission budget shall be updated according to more detailed definition of Ag reflective coating, WFS pick-off requirement and related coating definition, and anti-reflective (AR) coating on the WFS pick-off's back surface.

Absorption aspects have not yet been analysed in detail. While the 95 % required reflectivity in the [400 - 900] nm spectral range should limit corresponding absorption to maximum 5 % in that same spectral range, one should check during the detailed design phase that absorption outside the [400 – 900] nm range will be compatible with the maximum 10 % absorption requirement over the sun spectral irradiance range.

---

[16] only a marginal non-compliance occurs below 430 nm in Figure 21

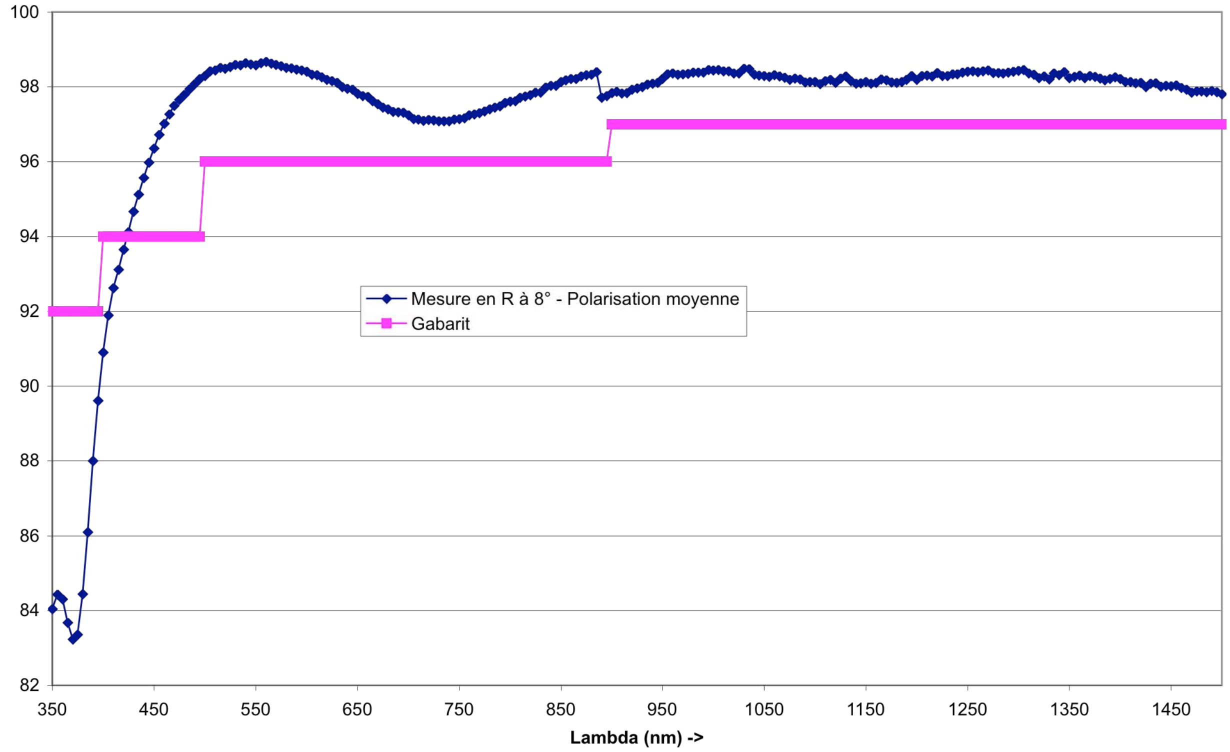

Figure 21: Ag coating - measured curve (supplier #1)

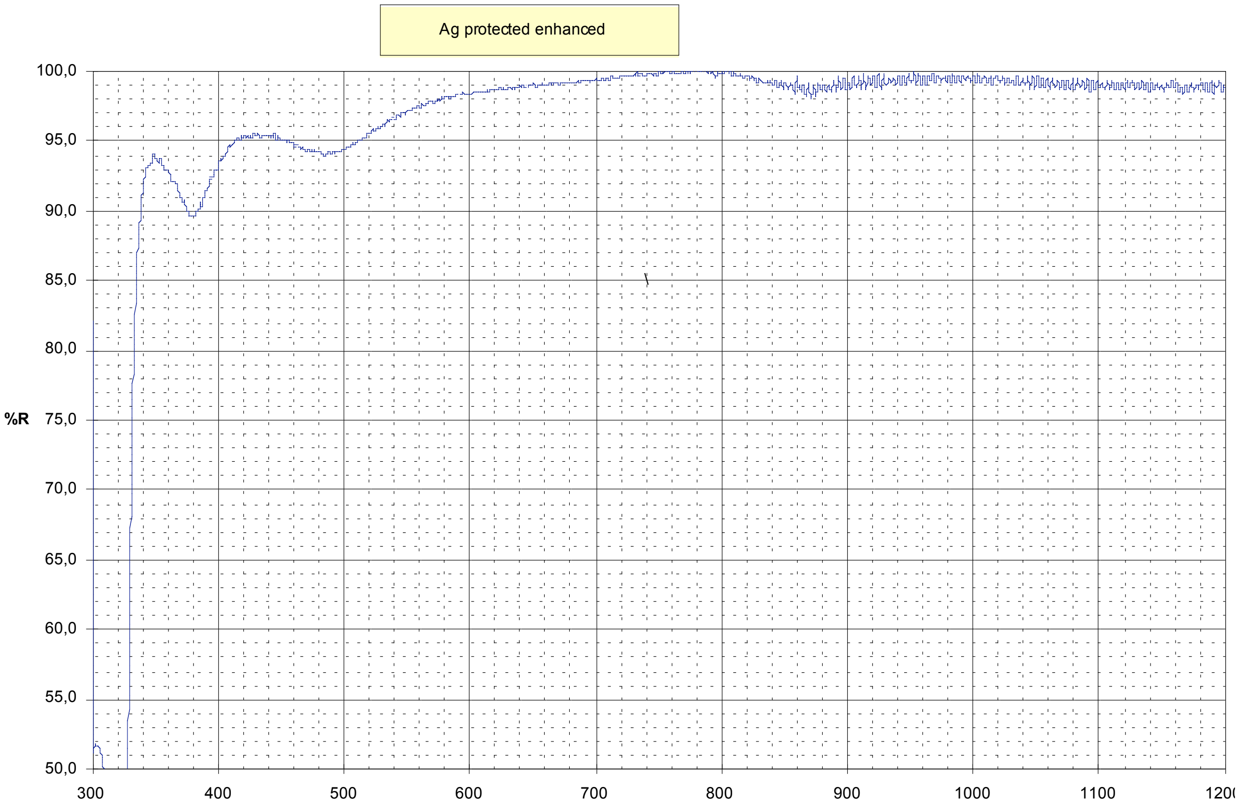

Figure 22: Ag coating - measured curve (supplier #2)

7.4 MISCELLANEOUS

This section aims at addressing performance requirements, which are somewhat related to optical design. They are not less critical or obvious (at least at this preliminary design stage) than the three aspects mentioned above: output beam size, wavefront error, and transmission.

Stray-Light

Stray-light has not been considered during the preliminary design phase, since the analysis requires opto-mechanical inputs, which are barely available at PDR level.

Moreover, stray-light analysis is quite a complex process not to run again and again.

Therefore, the stray-light analysis will be conducted during the detailed design phase, based on a well established and agreed preliminary design.

System Length and Height

System length requirement from [AD01] calls for a M2-M3 distance less than 2 m. On the other hand, this concerned the initially required on-axis configuration and does apparently not impact seriously any actual requirement.

About the same comment is given for the system height requirement of maximum 2 m between the elevation (Alt.) axis and the output beam.

Nevertheless, both requirements are fulfilled since the distance between M2 and M3 (i.e. between M2 and the elevation axis) is about 1,8 m, while the height of the elevation axis with respect to the output beam is 2 m (refer to §.6.1 for both).

Polarization

Due to the off-axis design with the polarimeter package located in the collimated just after the secondary mirror, and thus before any high folding angle on a flat mirror, it has been agreed to forget polarization considerations from the requirements in [AD01] and [AD02].

Mirrors Substrate Materials

Substrate materials for mirrors located in the tube and in the fork (i.e. above the new thermally isolating floor to be appointed in the building) are as required in [AD01] and [AD02]: ZERODUR® for the primary mirror and SiC (Silicon Carbide) for all other mirrors (M2 to M5).

Mirrors located in the ACE environment (field derotator and M6) are proposed to be made from ZERODUR® since SiC is not required here for thermal reasons.

Microroughness

Microroughness has not been considered in this preliminary design phase. It will concern optical manufacturing and requirement for a CVD cladding on SiC substrates (CVD cladding mandatory to achieve 2 nm microroughness).

8. TELESCOPE STRUCTURE

The telescope structure is divided in 3 main assemblies: the tube, the fork, and the ground interface. This section deals with design aspects regarding those parts.

8.1 TUBE

The tube is a mechanical assembly to which the following optical elements belong (in the sequence order defined above - §.5.1):

- the primary mirror (§.9.1);
- the field-stop or heat-stop (§.10.3);
- the secondary mirror (§.9.2);
- the output pupil stop (§.10.4);
- the polarimeter package (§.11.2 - out of AMOS scope);
- the tertiary mirror (§.9.3).

The guider telescope for tracking purpose (§.10.5) is also part of the tube assembly, although not in the optical sequence of optics deflecting the 6 arcmin portion of the sun into a stationary collimated beam towards the back-end instruments laboratory.

8.2 FORK

The fork is a mechanical assembly to which only the following optical elements belong:

- the Coudé optics (§.9.4) including mirrors M4 and M5.

8.3 GROUND INTERFACE

The tube is a mechanical assembly to which the following optical elements belong (in the sequence order defined above - §.5.1):

- the optical field derotator (§.9.5) including 3 flat folding mirrors;
- the back-end folding mirror (M6 - §.9.6);
- the wavefront sensor pick-off plate (§.5.7).

Mirrors located in the Ground Interface assembly (listed above) are proposed to be made of ZERODUR® instead of SiC (Silicone Carbide), due to the "friendly" thermal environment (ACE) obtained thanks to new floor's thermal isolation (§.4)

The wavefront sensor (§.10.6), with its pick-off partially reflecting plate (§.9.7) are also part of the ground interface mechanical assembly, although the former is not in the optical sequence of optical elements deflecting the 6 arcmin portion of the sun into a stationary collimated beam towards the back-end instruments laboratory.

9. MIRROR UNITS

The telescope includes several mirrors with related equipment (mechanical supporting cells with alignment features, thermal control, protection) taken as units. This section deals with design aspects regarding those mirror units.

9.1 M1 UNIT

On an optical point of view, the primary mirror unit mainly confines itself to the mirror.

The mirror is a concave off-axis parabola (conic constant $K = -1$) with a 4 m radius of curvature at the vertex (focal length of 2 m). The off-axis distance is 575 mm and the mirror's mechanical diameter is about 560 mm for a projected[17] useful clear aperture of 500 mm diameter. The mirror presents a 50 mm thick meniscus-like shape, with a spherical rear surface allowing to keep a roughly constant thickness. This meniscus-like shape is required by to minimise front surface deformation by the supporting structure (see FEA in [RD08]). The primary mirror material is ZERODUR® as required by [AD01].

The preliminary tolerances on manufacturing issues for the primary mirror are:

• radius of curvature (at vertex of parent parabola):	$\Delta RoC \leq \pm 5$ mm
• conic constant (of parent parabola):	$\Delta K \leq \pm 2 \cdot 10^{-4}$
• figuring errors (on reflected wavefront):	RMS WFE $\leq$ 20 nm PTV WFE $\leq$ 300 nm
• microroughness:	$Rq \leq 2$ nm (rms)

The mirror will be coated according to the requirements in [AD01]. Coating definition shall be done more accurately during the detailed design phase. Nevertheless, it is clear that the requirement calls for a performing silver coating.

The mirror will be supported by a two stages whiffle tree structure and interfaces with this support structure (through bonded pads) will be managed[18]. Note that the mirror is not light weighted (mainly for thermal considerations). The thickness, the shape, and the support design make it stiff enough so that front surface deformation is kept within the tight allowed budget (§.7.2).

The allowed thermo-mechanical deformation according to the preliminary budget is:

• surface deformation (SFE = surface error):	RMS SFE $\leq$ 7 nm

---

[17] orthogonal projection along common afocal optical axis

[18] detailed design to be done shortly after PDR

The mirror's front surface is thermally controlled to stick within maximum 1°C above ambient temperature. Although effort will be done to also stick within 1°C below ambient temperature, it is expected that a mirror's front surface colder than the ambient temperature does not affect the seeing (or less than a mirror hotter than ambient).

Beside the thermal system implemented on the rear side of the mirror (see [RD03]), an airflow system (§.10.2) will allow to flush thermally controlled air across front surface as required by [AD01].

A protective cover is implemented in the primary mirror unit (§.10.1). It aims at protecting the mirror from dust, whenever the telescope is not used.

As the mechanical dimension of the mirror is larger than the useful optical aperture, it is currently foreseen to have some physical stop in front of M1 (as close as possible to the surface). This stop will not serve to define the aperture stop anyway. This is done by the output pupil stop (§.5.4, §.8.1, §.10.4). The aim of the primary mirror's physical stop would be to limit its insulation and the reflected thermal flux towards the heat-stop. This aspect will be addressed during the detailed design phase.

9.2 M2 UNIT

The secondary mirror unit also mainly confines itself - optically - to the mirror.

The mirror is a concave off-axis parabola (conic constant K = -1) with a 0,4 m radius of curvature at the vertex (focal length of 200 mm). The off-axis distance is 57,5 mm and the mirror's mechanical diameter is about 70 mm (cylinder) for a projected[19] useful clear aperture of about 55 mm diameter (see Figure 13 above).

The mirror presents a 20 mm centre thickness for the mirror's "optical part", prolonged[20] by a 5 mm thick cylinder (Ø 30 mm) and a 5 mm thick triangular thermal plate ($Ø_{max}$ 100 mm). The rear face of the mirror's "optical part" is flat and perpendicular to parent's optical axis. On the side of this mirror's "optical part", 3 spotfaced zones are defined for blades bonding (see FEA in [RD08]). Thermal interfaces are also present through the triangular plate at the rear of the machined mirror substrate's "prolongation".

The secondary mirror material is SiC as required by [AD01].

The preliminary tolerances on manufacturing issues for the secondary mirror are:

- radius of curvature (at vertex of parent parabola):	$\Delta RoC \leq \pm 2$ mm
- conic constant (of parent parabola):	$\Delta K \leq \pm 2 \cdot 10^{-3}$
- figuring errors (on reflected wavefront):	RMS WFE ≤ 16 nm PTV WFE ≤ 300 nm
- microroughness:	Rq ≤ 2 nm (rms)

---

[19] orthogonal projection along common afocal optical axis

[20] for complementary and more detailed description of the mechanical aspect of the – monolithic SiC – M2 mirror, refer to [RD08] and to mechanical M2 unit drawing (ref. 1967-13-00-00, sub-assembly of [DWG04])

The mirror will be coated according to the requirements in [AD01]. Coating definition shall be done more accurately during the detailed design phase. Nevertheless, it is clear that the requirement calls for a performing silver coating.

The mirror will be supported through a 3 blades interface (with pads bonded on the spotfaced zones). The thickness, the shape, and the support design make it stiff enough so that front surface deformation is kept within the tight allowed budget (§.7.2).

The allowed thermo-mechanical deformation according to the preliminary budget is:

• surface deformation (SFE = surface error):	RMS SFE ≤ 5 nm

The mirror's front surface is thermally controlled to stick within maximum 0,5°C above ambient temperature. Although effort will be done to also stick within 0,5°C below ambient temperature, it is expected that a mirror's front surface colder than the ambient temperature does not affect the seeing (or less than a mirror hotter than ambient).

9.3 M3 UNIT

The secondary mirror unit also mainly confines itself - optically - to the mirror.

The mirror is mechanically similar to the secondary mirror (M2 - §.9.2) to keep the same thermo-mechanical design. It presents a flat front surface and an elliptical (130 x 100 mm^2) mechanical shape.

The mirror presents a 25 mm constant thickness for the mirror's "optical part", and is prolonged by a cylinder and a triangular thermal plate. On the side of the mirror's "optical part", 3 spotfaced zones are defined for blades bonding (see FEA in [RD08]). Thermal interfaces are also present through the triangular plate at the rear of the machined mirror substrate's "prolongation".

The tertiary mirror material is SiC as required by [AD01].

The preliminary tolerances on manufacturing issues for the tertiary mirror are:

• flatness:	focus ≤ ± 0,5 fringes
• figuring errors (on reflected wavefront):	RMS WFE ≤ 10 nm
	PTV WFE ≤ 300 nm
• microroughness:	Rq ≤ 2 nm (rms)

The mirror will be coated according to the requirements in [AD01]. Coating definition shall be done more accurately during the detailed design phase. Nevertheless, it is clear that the requirement calls for a performing silver coating.

The mirror will be supported through a 3 blades interface (with pads bonded on the side's spotfaced zones). The thickness, the shape, and the support design make it stiff enough so that front surface deformation is kept within the tight allowed budget (§.7.2).

The allowed thermo-mechanical deformation according to the preliminary budget is:

• surface deformation (SFE = surface error):	RMS SFE ≤ 2,5 nm

The mirror's front surface is thermally controlled to stick within maximum 0,5°C above ambient temperature. Although effort will be done to also stick within 0,5°C below ambient temperature, it is expected that a mirror's front surface colder than the ambient temperature does not affect the seeing (or less than a mirror hotter than ambient).

9.4 COUDÉ UNIT (M4-M5)

The thermo-mechanical design of both flat folding mirrors forming the Coudé train (M4 and M5) is similar to the design of M3.

The "optical" part of these flat mirrors is:

- Ø 96 mm round shape with constant 25 mm (TBC) thickness for M4
- 215 mm x 110 mm elliptical shape with constant 30 mm thickness for M5

As for M3, a cylinder and a triangular thermal plate prolong the mirrors "optical parts", to cope with thermal control (for both M4 and M5).

M4 will be supported through a 3 blades interface (with pads bonded on the side's spotfaced zones). Thickness, shape, support design, and the size as well, make it stiff enough to easily keep front surface deformation within the tight allowed budget.

Due to it size, the supporting concept of M5 is different from the one for M2 to M4. M5 will be supported through a 3 blades interface (with pads bonded in drilled zones in the mirror's rear surface, rather than on the mirror's side). Thickness, shape, support design, make it stiff enough to keep front surface deformation within the tight allowed budget (§.7.2).

Substrate material for M4 and M5 is SiC as required by [AD01].

The preliminary tolerances on manufacturing issues for M4 and M5 are:

- flatness: ≤ ± 2 fringes (M4) / ± 0,7 fringes (M5)
- figuring errors (on reflected wavefront): RMS WFE ≤ 10 nm (M4 and M5)
  PTV WFE ≤ 300 nm (M4 and M5)
- microroughness: Rq ≤ 2 nm (rms) (M4 and M5)

The mirrors will be coated according to the requirements in [AD01]. Coating definition shall be done more accurately during the detailed design phase. Nevertheless, it is clear that the requirement calls for a performing silver coating.

The allowed thermo-mechanical deformation according to the preliminary budget is:

- surface deformation (SFE = surface error): RMS SFE ≤ 2,5 nm (M4) / 5 nm (M5)

Mirrors front surfaces are thermally controlled to stick within maximum 0,5°C above ambient temperature. Although effort will be done to also stick within 0,5°C below ambient temperature, it is expected that mirrors front surfaces colder than the ambient temperature does not affect the seeing (or less than mirrors hotter than ambient).

9.5 FIELD DEROTATOR UNIT

The field rotator unit includes - on the optical point of view - 3 mirrors (DM1 to DM3). These mirrors are flat.

As these mirrors are located in the ACE in the building's 2nd floor, with thermal isolation from external ambient temperature, a thermal control system is not necessary. This obviously simplifies the mechanical support and the mechanical shape of the mirrors (no prolongation required). Moreover, ZERODUR® can be used instead of SiC[21].

The mechanical shape of these mirrors is as follows:

- Ø 250 mm round shape with constant 50 mm thickness for DM1
- Ø 150 mm round shape with constant 30 mm thickness for DM2
- Ø 270 mm round shape with constant 50 mm thickness for DM3

Round shape is used for optical manufacturing reasons, as far as mechanical constraints do not occur, although beam footprints call for elliptical shape.

Supporting of the derotator's mirrors is not finalised at the moment, but the supporting design used for M5 should be kept for DM1 and DM3 large mirrors, while DM2 could either use the M2-M3-M4 cells concept or the M5 one.

The allowed thermo-mechanical deformation according to the preliminary budget is:

- surface deformation (SFE): RMS SFE ≤ 2,5 nm (DM2) / 5 nm (DM1 & DM3)

The preliminary tolerances on manufacturing issues for derotator mirrors are:

- flatness: ≤ ± 2 fringes (DM2) / ± 1 fringe (DM1 & DM3)
- figuring errors (on reflected wavefront): RMS WFE ≤ 10 nm (all mirrors)
  PTV WFE ≤ 300 nm (all mirrors)
- microroughness: Rq ≤ 2 nm (rms) (all mirrors)

The mirrors will be coated according to the requirements in [AD01]. Coating definition shall be done more accurately during the detailed design phase. Nevertheless, it is clear that the requirement calls for a performing silver coating.

9.6 BACK-END FOLDING UNIT (M6)

The back-end folding unit includes - on the optical point of view - a simple flat mirror.

Again, as this mirror is located in the ACE in the building's 2nd floor, with thermal isolation from external ambient temperature, a thermal control system is not necessary. This obviously simplifies the mechanical support and the mechanical shape of the mirror (no prolongation required). Moreover, ZERODUR® can be used instead of SiC.

---

[21] it is preferable to use ZERODUR® instead of SiC whenever possible, mainly for optical manufacturing and thermo-opto-mechanical reasons, but for cost reasons as well

The mechanical shape of M6 is as follows:

- Ø 200 mm round shape with constant 40 mm thickness

Round shape is used for optical manufacturing reasons, as far as mechanical constraints do not occur, although beam footprint calls for elliptical shape.

Supporting cell of M6 is not finalised at the moment, but the large mirrors supporting design used for M5 should be kept.

The allowed thermo-mechanical deformation according to the preliminary budget is:

- surface deformation (SFE): RMS SFE ≤ 2,5 nm

The preliminary tolerances on manufacturing issues for derotator mirrors are:

- flatness: ≤ ± 1,5 fringes
- figuring errors (on reflected wavefront): RMS WFE ≤ 10 nm
  PTV WFE ≤ 300 nm
- microroughness: Rq ≤ 2 nm (rms)

The mirror will be coated according to the requirements in [AD01]. Coating definition shall be done more accurately during the detailed design phase. Nevertheless, it is clear that the requirement calls for a performing silver coating.

9.7 WFS PICK-OFF UNIT

The WFS pick-off unit will consist – on the optical point of view – in a transmission plate (window), making an angle with the output beam's propagation axis.

This plate presents two flat parallel surfaces. The first surface is used to deflect (pick-off) part of the beam towards the WFS, while most of the beam is transmitted through the plate towards the back-end instruments.

The design of this plate is not finalised. It should consist in a round shape plate, with a thickness as thin as possible but compatible with low deformation supporting design.

Material for this transmitting plate should be BK7 (or high quality glass)[22].

Once again, as this plate is located in the ACE in the building's 2nd floor, with thermal isolation from external ambient temperature, a thermal control system is not necessary.

Coating of this plate will include an anti-reflective (AR) coating on the rear surface in order to enhance global throughput. Depending on the WFS requirements in terms of flux, the front surface could either be left as is to benefit from the 4 % Fresnel reflection, or be coated with a partially reflective coating[23].

---

[22] although material such as standard fused silica is also possible

[23] spectral selection could be considered as well, depending on WFS requirements considerations

10. AUXILIARY ITEMS

Beside the telescope main structure and the mirror units, some auxiliary equipment is required, that takes place on the telescope or in the close vicinity of the telescope. This section deals with the design aspects regarding those auxiliary items.

10.1 M1 COVER

A mechanical system allowing preventing the primary mirror from dust (during non-operational time) has been designed[24].

Opening and closing the mirror cover is motorised. The cover should withstand solar flux for some time, certainly sufficient to close the enclosure. Nevertheless, the primary mirror cover is not supposed to withstand long-time exposure to the sun.

Moreover, if the cover itself can withstand some exposition to the sun, the primary mirror below the cover should not heat above specified highest temperature (50°C).

Note that this auxiliary item is not part of the optical design. It is described in [RD02].

10.2 M1 FLUSHING

The primary mirror unit includes a system to flush temperature controlled air across the front surface of the mirror, with an airflow of about 1,5 m/s.

Eventually, the system will be able to flush cooled air at higher speed flow during non-operational time (TBC)[25].

Note that this auxiliary item is not part of the optical design. It is described in [RD03].

10.3 HEAT STOP

On the optical point of view, the heat-stop is confined to its field-stop use. To this aim, the field stop mainly consists in a 4 mm diameter hole, corresponding to the 6 arcmin FOV with some margins for primary image aberrations (see Figure 12).

As the aberrated primary image does not allow for a sharp and accurate field selection limit, position and size of the field-stop is not tightly toleranced. Therefore, it will rather define a blurred limit. Fine field limit has thus to be performed at back-end instruments level if required.

Basically, the aim of the heat-stop is to block the heat from the solar disk outside the useful limited part of 6 arcmin diameter.

---

[24] see M1 unit drawing (ref. 1967-11-00-00, sub-assembly of [DWG04])

[25] e.g. in order to balance heating under M1 cover if necessary or to clean up the mirror from some dust

The heat-stop is more detailed in [RD02] and [RD03] for the thermo-mechanical aspects. Its principle is to reflect most of the light (or heat) outside the useful FOV. This is done by the reflector design of the heat-stop, which is coated with appropriated coating (with high reflectivity in the visible and high emissivity in the infrared). The reflector remains a mechanical part though, even if it has a surface finish as polished.

The mechanical configuration of the reflector makes the reflecting light fall aside from the primary mirror. Reflected light shall be diverging still. This means that when the telescope points near the horizon, the amount of light reflected by the heat-stop will be reflected towards the sun, while it will be reflected on the floor (the new one that shall thermally isolate the open enclosure from the ground interface and other equipment located on the building's 2nd floor) when telescope is pointing with low zenithal angles.

10.4 OUTPUT PUPIL STOP

As defined above in this document, the entrance pupil of the telescope being located on the off-axis primary mirror, it has been preferred to mechanically materialised the output pupil and to define it as the aperture stop of the telescope system.

Therefore, a mechanical plate with a sharp-edged 50 mm diameter hole will be located after the secondary mirror (at 230 mm from the nominal secondary mirror vertex along the collimated beam).

10.5 GUIDER TELESCOPE

The guider telescope has been considered during the preliminary design phase from a conceptual point of view.

From the Technical Proposal [AD03], the guider telescope would require a 4kx4k CCD (~12 μm pixel size) and a 2,4 m focal length telescope to cover a field of two solar disks, with an image-scale of 1 arcsec/pixel and an accuracy of 0,1 arcsec assuming 1/10 sub-pixel accuracy. Also, a limb-sensor was considered as detection technique.

Obviously, one would wish to decrease the focal length. There are at least two reasons for that:

- 2,4 m focal length is longer than the 2 m primary mirror's focal length, and one would not imagine the guider to be as long as the main telescope or close to;
- a long focal length with a large enough field of view makes it more difficult to find a commercially available telescope or objective optics.

Moreover, a coverage of two times the diameter of the sun seems a bit tight: this would only let the main telescope to point the border of the sun while keeping the full disk of the sun on the guider's CCD. It has thus been decided to increase the coverage to two-and-a-half times the diameter of the sun. This would allow the main telescope to point outside the solar disk by one-and-a-half times the radius of the sun[26].

Field coverage of the guider telescope is thus - at least - 80 arcmin diameter. This could be rounded to 1,5 degree x 1,5 degree or more.

Besides increasing the field coverage, one could wish to enhance the guider's resolution (or accuracy). Indeed, the 0,1 arcsec accuracy taken into account in the Technical Proposal is just the requirement for the closed-loop tracking over one hour[27].

Finally, limb-sensors don't seem easily commercially available.

A side aspect of the field coverage is that, depending on the detector, one could either cover the required field with a steady guider optics and single detector, or require to manage some offset between the guider, pointing and tracking at sun's centre, and the main telescope, pointing in closed-loop at the scientific target[28].

The latter could limit the CCD size ("instantaneous" field coverage limited to about one solar disk) and field requirement for guider optics, but would require more complexity by depointing the guider with respect to the main telescope or at least by moving the CCD at guider's focal plane. This should be avoided thus.

The first task is then to investigate the detector aspect by looking at:

- enhancing sub-pixel accuracy (with a target of 1/60);
- decreasing the pixel size (with a target of about 5 μm);
- CCD size (number of pixels) available as standard (2kx2k target);
- CCD size (image size) offering compatibility with commercially available optics;
- commercially available (and low-cost) CCD systems matching the above.

During investigation, it also appeared that fast enough CCD would be preferable, allowing averaging techniques.

Also, although the limb-sensor technique is not totally rejected, CCD-based centroïdisation methods and algorithms are more common and easier to deal with. Limb-sensor techniques are usually linked to 4-cells detectors, which appear more constraining with respect to the application (field offset management, accuracy), and would require more software development, although detector itself would be cheaper.

---

[26] there is no requirement on this point; so it has been decided to go for similar requirement as ATST

[27] note that it is not clear that the "one-shot" accuracy or resolution of the guider is directly accounted in the closed-loop tracking performance (especially compared to expected seeing): statistical processing and efficient algorithms are more directly concerned

[28] offset is thus the angle between the sun's centre and the scientific target, which is constant during tracking once it has been set

The current baseline uses a 4,8kx3,2k (16 Mpx), 35mm standard CCD (3:2 aspect ratio), with 7,4 μm pixel size (square) and 3 frames per second frame rate. It moreover offers interesting features such as electronic shutter, progressive scan readout, low noise, high dynamic range, high sensitivity, and blooming suppression.

With this baseline CCD, and accounting for a sub-pixel accuracy of 1/40 that seems feasible, a good fit focal length of 740 mm would correspond to:

- image scale of 2 arcsec/px;
- 0,05 arcsec accuracy;
- 2,7 deg x 1,8 deg FOV coverage (80 arcmin would require 2400 px).

With the same, a 600 mm focal length guider optics would correspond to a 2,54 arcsec/px image scale, a 0,064 arcsec accuracy, and a 206 arcmin x 137 arcmin field coverage. On the other side, and again with the same assumptions, a 1 m focal length would correspond to a 1,48 arcsec/px, a 0,04 arcsec accuracy, and a 120 arcmin x 80 arcmin field coverage.

This baseline CCD therefore allows the selection of suitable guider optics. This selection will be done during the detailed design phase. With the above indications, it appears possible to look for a good professional photographic teleobjective (*f* between 0,6 m and 1,0 m) or a astronomical[29] - most probably refracting – telescope. Both would offer good enough image quality.

One should note that the main telescope's pointing direction is primarily given by the primary mirror's optical axis.

To eliminate the most critical contributor to the closed-loop tracking quality, which is the differential deflection with respect to the main telescope, one is expecting to attach the guider to the primary mirror's mainframe on the tube.

On the other hand, field selection is performed (at first glance) by the field-stop. The latter does not impact tracking accuracy but could produce a slight shift of the field limits selected around the steady, "tracked", scientific object.

The detailed closed-loop tracking analysis will be performed during the detailed design phase. Nevertheless, the preliminary guider design described above provides already a good starting point. While the guider optics is selected according to the finally chosen detector, the guider will be incorporated in the overall telescope design.

The task of the guider is to close the tracking loop. It is not aimed at open-loop pointing. Nevertheless, use of the guider at night, pointing at stars, is under consideration. The information should thus be correlated with information from the main telescope while establishing and calibrating the pointing model (see [RD06]). This could help for differential deflection calibration. This needs further and deeper investigation.

---

[29] from high quality amateur astronomy market

10.6 WAVEFRONT SENSOR

Preliminary tolerance analysis (§.6.3) outlines the sensitivity of telescope's performance (wavefront error) with respect to secondary mirror's focus, decentre and tilt. It thus appears helpful - if not even necessary – to monitor and correct wavefront errors due to operational misalignment. A wavefront sensor (WFS) can perform this task.

Basically, the WFS uses the Shack-Hartmann principle to analyse incoming wavefront. It provides, among other, the Zernike decomposition of the wavefront. The Zernike coefficients are then translated into secondary mirror's corrections, which are transmitted to the hexapod.

Discussing WFS related aspects has been a long process, which is expected to converge at the beginning of the detailed phase, to finalize specification, interfaces, and contract with a candidate supplier for the WFS. Going further requires to freeze the optical design of the telescope (that is the aim of the PDR).

The following aspects came into discussion during this WFS pre-definition phase.

Part of the light coming from the secondary mirror (collimated beam), and associated wavefront, shall be available to the WFS. This is the task of the pick-off optics (§.5.7). Requirements regarding the required amount of light available to the WFS, and its spectral characteristics should be defined by the sub-contractor (see also §.7.3).

The output beam from the secondary mirror is collimated, while the WFS requires a focused beam (with an optimum F#). This will be the task of a focusing optics to be part of the WFS supplier's furniture. The supplier shall check quality impact of this focusing optics: focusing optics impact on the wavefront could be calibrated out). The focusing optics, together with the WFS internal collimator will convert the large collimated beam (Ø 50 mm pupil diameter) into the small diameter accepted by the CCD and lenslet array. Note that the focusing should be large enough (field spread beam expansion).

Once focused into the WFS itself, it is required to select only part of the - 6 arcmin diameter – extended source to have a punctual source. Placing a pinhole of suitable size at the focus of the focusing optics performs this task. Note that this pinhole can be replaced by a calibration source for internal WFS calibration purpose. Corresponding motorised mechanism is part of the WFS. A third position transmitting the whole 6 arcmin field is possible.

The WFS apparently requires the pupil to be derotated (it is rotated by the Alt.-Az. mount and by the field derotator). Thus, the WFS (possibly including focusing optics) shall be located on a rotation stage.

The WFS operating scheme as described here above makes it working on-axis. Off-axis performance is not considered. This is sufficient to monitor and correct secondary mirror's misalignment.

As described above, the WFS will provide Zernike coefficients to the TCS. Basically, focus and two-axes coma information is usually sufficient to perform the correction. Nevertheless, according to a quick optical analysis showing Zernike deformation for afocal system's misalignment, more detailed Zernike information is required, providing also tilts, astigmatisms, and 3-fold, as well as possibly 5th order astigmatisms. This has to be checked with further and more detailed investigation with the optical model.

The TCS will then convert the provided Zernike information into hexapod motion, based on translation tables (obtained from the optical model)[30]. Secondary mirror's position and orientation will then be corrected thanks to the hexapod.

Note also that the WFS needs to be adapted from its standard stellar operation to MAST solar work. Nevertheless, it could be interesting to keep stellar operation capabilities for maintenance and calibration tasks at night on stars.

Also worth to mention is that WFS duty cycle will take care of seeing integration (or averaging). WFS information is thus expected at a rate of about one data set by minute of time (TBC).

10.7 ALTITUDE CABLE-WRAP

This auxiliary item does not concern optical design. It is mainly described in mechanical design [RD02] and electrical design [RD04].

10.8 AZIMUTH CABLE-WRAP

This auxiliary item does not concern optical design. It is mainly described in mechanical design [RD02] and electrical design [RD04].

10.9 UPPER-SUNSHIELD

This auxiliary item does not concern optical design. It is mainly described in mechanical design [RD02] and thermal design [RD03].

10.10 CABINETS & SERVICES RELATED TO THE TELESCOPE

This auxiliary item does not concern optical design. It is mainly described in thermal design [RD03] and electrical design [RD04].

---

[30] this corresponds to the current baseline, but the WFS could possibly also provide the required motion directly, beside the Zernike information

11. IMPLANTATION AND INTERFACES

The telescope is installed on the upper floor of the main existing building on the USO island in Udaipur. It is thus important to define how it will be implemented with respect to the existing site configuration and what appointments have to be taken. Also the interfaces with the site equipment and with specific instruments have to be accounted and defined. This section deals with design aspects regarding the implantation and interfaces of the telescope on-site. It mainly concerns two aspects:

- the telescope with its auxiliary equipment;
- the polarimeter package (out of AMOS scope) to take place between M2 and M3.

11.1 TELESCOPE AND AUXILIARY EQUIPMENT

On the optical point of view, the implantation and interfaces of the telescope consists in the output beam (refer also to §.7.1 and §.8.3).

Interface with the building's 2nd floor (height of the output beam axis) is defined in [DWG02]. Nevertheless, this is possibly only an indicative value since reference for the telescope is rather accounted from the new floor level. Anyway, this interface should be examined in depth at this PDR level, in order to agree upon frozen interfaces.

The output beam level is 1220 mm below the reference level[31] and thus 553 mm above the modified pier's upper level (ground interface lower level), i.e. approximately 1280 mm above the current 2nd floor level (refer to [DWG02]).

Also to consider is the possible location for the back-end instruments "laboratory". Indeed, as the beam expands with field spread (§.7.1), it should be wise to investigate this aspect on USO's side (please refer to the note at the end of §.7.1. Also consider auxiliary equipments such as the cable-wrap support[32] around the ground interface mechanically described in [RD02] and in [DWG06][33].

11.2 POLARIMETER PACKAGE

The polarimeter is not in the scope of AMOS design and supply. Only some interface shall be provided for installation of this polarimeter package on the telescope.

The polarimeter package's interface is described in AMOS drawing [DWG03]. It is located after the secondary mirror and the output pupil in the demagnified collimated (output) beam.

---

[31] the reference level is expected to be at the level of the ring of the existing dome, i.e. the upper side of the new floor to be appointed

[32] see Cable-Wrap drawing (ref. 1967-40-00-00)

[33] refer also to [DWG01]

From this preliminary optical design, the polarimeter package is located 420 mm after the output pupil (thus at 650 mm from secondary mirror's vertex along output beam's direction of propagation). As the polarimeter package is assumed to be 150 mm long, its output is located 1000 mm before the tertiary mirror.

The output beam size accounting for field spread is thus 57,3 mm diameter at polarimeter package's entrance, and 60 mm diameter at polarimeter package's output.

According to discussions during the preliminary design phase, the polarimeter package will consist in a 5 kg (or less) box.

The size of the box is 130 x 200 x 150 mm^3 (width x length x height) with a 65 mm diameter hole located at 60 mm from the origin of polarimeter package's frame in X and Y directions.

The frame to refer to here is defined by:

- its Z-axis pointing towards M2 (vertical for a telescope pointing at the zenith) and corresponding to the "height" of the box;
- its Y-axis located in the plane including the common afocal optical axis and the centres of the off-axis parabolas, pointing from M1 side towards M2 side (horizontal for a telescope pointing at the zenith), and corresponding to the "length" of the box;
- its X-axis completing the right-handed frame and corresponding to the "width" of the box;
- its origin in the upper rear corner of the box.

The polarimeter package will house Polarization Calibrator Modules and Polarization Modulator Modules. Polarimeter's electronics are not included in the polarimeter package. They shall be located "on-board" the telescope (expected in cabinets located on the azimuth cable-wrap rotating part – see [RD04]).

S.A. AMOS
ADVANCED MECHANICAL AND OPTICAL SYSTEMS

MULTI-APPLICATION SOLAR TELESCOPE

PRELIMINARY MECHANICAL DESIGN REPORT

[CONTRACT NO: PRUS20060004600101 FE]

Doc. nr :	AMOS/1967/30/02
Issue :	1.A
Date :	13/7/07

	NAME	DATE	SIGNATURE
Prepared by	Mechanical Dept.	13/7/07	Delrez
Checked by	Christophe DELREZ	13/7/07	Delrez
Released by	Stefan DENIS	13/7/07	Stefan Denis

DISTRIBUTION LIST

Name	Company	Quantity
Archives	AMOS	original
Stefan DENIS	AMOS	1 copy
Prof. P. VENKATAKRISHNAN	PRL/USO	1 copy

CHANGE RECORD

ISSUE	DATE	NB OF PAGES	MODIFIED PAGES	REMARKS
1.0	13/7/07	39	initial issue	

TABLE OF CONTENTS

1. APPLICABLE & REFERENCE DOCUMENTS

Applicable and reference documents are defined here below. This includes documents and drawings.

1.1 APPLICABLE DOCUMENTS

ITEM	*TITLE*	*REFERENCE*	*ISSUE*	*DATE*
AD01	*Tender Specification [PRL/04/05-06]*	*1967/03/01*	-	*22/12/05*
AD02	*User Requirements*	*1967/03/02*	-	-
AD03	*MAST Technical Proposal (AMOS)*	*D1660/technical*	*2.0*	*19/05/06*
AD04	*Compliance Matrix (revised)*	-	-	*01/06/06*

1.2 REFERENCE DOCUMENTS

ITEM	*TITLE*	*REFERENCE*	*ISSUE*	*DATE*
RD01	*Preliminary Optical Design Report*	*1967/30/01*	*1.A*	*jj/mm/aa*
RD02	*Preliminary Mechanical Design Report*	*1967/30/02*	*1.A*	*jj/mm/aa*
RD03	*Preliminary Thermal Design Report*	*1967/30/03*	*1.A*	*jj/mm/aa*
RD04	*Preliminary Electrical Design Report*	*1967/30/04*	*1.A*	*jj/mm/aa*
RD05	*Compliance Matrix (PDR issue)*	*1967/30/05*	*1.A*	*jj/mm/aa*
RD06	*Preliminary TCS Design Report [OSL]*	*1967/30/06*	*1.A*	*jj/mm/aa*
RD07	*Main Performance Analyses & Error Budgets*	*1967/01/10*	*1.A*	*jj/mm/aa*
RD08	*Telescope Structure FEM analysis*	*1967/01/08*	*2*	*27/06/07*
RD09	*M1 Cell FEM Analysis*	*1967/01/09*	*1*	*30/05/07*
RD10	*Mirrors Supports FEM Analysis*	*1967/01/11*	*1*	*20/06/07*

1.3 REFERENCE DRAWINGS

ITEM	*TITLE*	*REFERENCE*	*ISSUE*	*DATE*
DWG01	*General View*	*1967-00-00-00*	*A*	*13/07/07*
DWG17	*Optical Path Layout*	*1967-00-00-10*	*A*	*13/07/07*
DWG02	*Building Interfaces*	*1967-00-00-90*	*A*	*13/07/07*
DWG03	*Polarimeter Interfaces*	*1967-10-00-90*	*A*	*13/07/07*
DWG04	*Tube General Assembly*	*1967-10-00-00*	*A*	*13/07/07*
DWG07	*M1 mirror Assembly*	*1967-11-00-00*	*A*	*13/07/07*
DWG08	*M2 mirror Assembly*	*1967-13-00-00*	*A*	*13/07/07*
DWG05	*Fork General Assembly*	*1967-20-00-00*	*A*	*13/07/07*
DWG09	*Altitude drive Assembly*	*1967-21-10-00*	*A*	*13/07/07*
DWG10	*Altitude brake Assembly*	*1967-21-20-00*	*A*	*13/07/07*
DWG11	*Coudé train Assembly*	*1967-23-00-00*	*A*	*13/07/07*
DWG06	*Ground Interface General Assembly*	*1967-30-00-00*	*A*	*13/07/07*
DWG12	*Azimuth drive Assembly*	*1967-31-00-00*	*A*	*13/07/07*
DWG13	*Derotator Assembly*	*1967-34-00-00*	*A*	*13/07/07*
DWG14	*M6 Assembly*	*1967-35-00-00*	*A*	*13/07/07*
DWG16	*Cable Wrap Assembly*	*1967-40-00-00*	*A*	*13/07/07*
DWG15	*Upper Sunshield and Cable Wrap Assembly*	*1967-50-00-00*	*A*	*13/07/07*

2. ACRONYMS

AD	:	Applicable Document
Alt.	:	Altitude (axis)
Alt-Az.	:	Altitude-Azimuth (mount)
AMOS	:	Advanced Mechanical & Optical Systems
Az.	:	Azimuth (axis)
C	:	Compliant
DDR	:	Detailed Design Review
DWG	:	Drawing
FFOV	:	Full Field Of View
FOV	:	Field Of View

H/W	:	Hardware
HS	:	Heat Stop
I/F	:	Interface(s)
K-O	:	Kick-Off
MAST	:	Multi-Application Solar Telescope
mNC	:	marginally Non-Compliant
N/A	:	Not Applicable
NC	:	Non-Compliant
NFOV	:	Null Field Of View (= centre of the field)
OSL	:	Observatory Science Ltd.
PDR	:	Preliminary Design Review
pNC	:	partially Non-Compliant
PP	:	Polarimeter Package
PRL	:	Physical Research Laboratory (Govt. of India)
PTV	:	Peak-To-Valley
RD	:	Reference Document
RMS	:	Root Mean Square
RSS	:	Root Sum Square
S/W	:	Software
TBA	:	To Be Approved (by PRL/USO)
TBC	:	To Be Confirmed (by AMOS)
TBD	:	To Be Defined (by AMOS or PRL/USO)
TCS	:	Telescope Control System
USO	:	Udaipur Solar Observatory (PRL – Govt. of India)
WFE	:	WaveFront Error
WFS	:	WaveFront Sensor

3. SCOPE

This document forms a part of the description of the preliminary design done by AMOS for the MAST project. It is not intended at providing a thorough description of the telescope's design, but it rather defines the basic concepts, assumptions and interfaces taken into account by AMOS during the preliminary design phase.

Design documents that participate to the description of the MAST preliminary design include optical [RD01], mechanical [RD02], thermal [RD03], and electrical [RD04] preliminary design reports. These design reports can refer to specific reference documents [RDxx] whenever required. Assembly and interface design drawings [DWGxx] provide complementary information to the design description. A TCS preliminary design report [RD06] completes the list of design documents.

This document is part of the MAST PDR data package, and thus participates to the process of freezing the basic concepts, assumptions and interfaces before proceeding to the detailed design. It is important to agree on a frozen status of these design aspects at PDR level in order to avoid schedule and cost impact of design modification during the detailed design phase.

The telescope design is obviously driven by the particular object it is dedicated to observe: the Sun. On the other hand, the specific environmental conditions (especially the temperature range and variations) are also driving parameters for the design. Finally, the telescope preliminary design aims at basically complying with the design requirements expressed by PRL/USO (Alt-Az. mount, off-axis optical configuration, materials requirements for the mirrors, ...).

Whenever relevant, a justification (discussion, analysis, calculation note) of the design choices is provided or referred to (through Reference Documents). This aims at showing the good match of the design with the PRL/USO requirements ([AD01] & [AD02]). Meanwhile, specific Performance Analyses and Error Budgets related to the main MAST requirements are provided in a separate document [RD07], while a Compliance Matrix summarizes the compliance status of the design with respect to the requirements in another separate document [RD05].

This document specifically deals with the mechanical part of the MAST preliminary design. It focuses on the mechanical Alt.-Az. mount design, on its implications, its sub-assemblies and components, as well as on the implantation of the telescope within the existing building. This document also defines all mechanical interfaces, e.g. interfaces with the pier, building and customer's instrumentation (polarimeter, back-end instruments).

4. TELESCOPE DESIGN OVERVIEW

The Multi-Application Solar Telescope (MAST) is a 50 cm diameter class telescope to be installed on the USO island on the lake Fatehsagar in Udaipur, India. It is dedicated to solar observation.

The telescope is designed, manufactured, assembled and installed on-site by AMOS. It will be installed on the upper floor of the main existing building. Some appointments of the existing pier, dome and 2nd floor will be necessary for that purpose. Moreover, some additional equipment will be required on-site for proper operation of the telescope.

An overview of the MAST design outlines 3 categories of design elements that drive the structure of the document:

- the *telescope structure* (§.5), including the tube, fork and ground interface parts;
- the *mirror units* (§.6), including the primary mirror, the secondary mirror and the tertiary mirror units, the Coudé optics unit, the field derotator unit, the back-end folding unit, and the wavefront sensor pick-off unit;
- the *auxiliary equipment* (§.7), including a M1 cover and a M1 flushing system, the heat stop, an output pupil stop, a guider telescope, a wavefront sensor, the altitude and azimuth cable-wraps.

The implantation of the telescope in the existing building and the interfaces with the PRL/USO equipment and site also forms an important part of the design (§.10).

All the above mentioned design elements concern several aspects of the design:

- the optical design;
- the mechanical design;
- the thermal design;
- the electrical design.

Each of these design aspects is detailed in a separate document.

Optical Design

The *optical design* (detailed in [RD01]) is based on an off-axis afocal gregorian configuration formed by two confocal off-axis concave parabolas (M1 & M2). The ratio of the focal lengths (f_{M1}/f_{M2}) gives the angular afocal magnification, which is the reverse of the pupil magnification.

A field stop, located at the primary focus, limits the field of view to a diameter of about 6 arcmin. This field stop also and primarily serves as a heat stop (see thermal design). A pupil stop will materialize the output pupil after M2. Both the pupil stop and the field/heat stop are included in the auxiliary items list.

The specification speaks for a one-tenth pupil demagnification, and hence to a 10-times angular magnification. Thus, the collimated output beam presents a one-degree field diameter spread angle that makes the full field beam footprint quickly enlarge.

A set of flat mirrors (M3 to M6) folds the beam several times along the desired path that coincides with the mechanical altitude and azimuth axes: between M3 and M4, and between M5 and M6, respectively.

The last flat folding mirror (M6) folds the beam out of the telescope towards back-end instruments. Beside these flat folding mirrors, the optical design also includes a pick-off system that folds part of the beam towards the wavefront sensor system.

An optical field derotator takes place between M5 and M6, i.e. where the beam coincides with the azimuth axis. It is formed by 3 flat mirrors rotating as a group. The aim of this field derotator is to keep the image stationary at back-end instruments level, while the Alt-Az. mount concept basically makes the image rotate.

A guider telescope and a wavefront sensor complete the optical design aspects for the telescope, as auxiliary equipment.

Optical configuration and interfaces shall be definitely set from the PDR.

Mechanical Design

Mechanical design (detailed in this document) is based on the well-known Alt-Az. mount concept. The telescope is then split into 3 main parts or assemblies:

- the ground interface assembly, that interfaces the telescope to the pier, supports the telescope's other main parts through an azimuth bearing, and which structure supports some equipment such as a field derotator, a mirror unit folding the beam to the back-end instruments, and a wavefront sensor unit;
- the fork assembly, which rotates around the azimuth axis, and supports the Coudé optics and the altitude bearing;
- the tube assembly, which rotates around the fork's altitude axis and includes the primary, secondary and tertiary mirrors (M1, M2, M3) units, a heat-stop, and the interface for the polarimeter package.

Most of the auxiliary equipment also concern the mechanical design: a dust protective cover and a front surface flushing system for the primary mirror, the heat stop and the pupil stop, the guider telescope and the wavefront sensor, the azimuth and altitude cable-wraps. All these items have to be implemented in the overall mechanical design.

The mechanical design also takes into account the implantation of the telescope and some auxiliary equipment (e.g. the azimuth cable-wrap) within the existing building, according to some appointments to be defined, as mentioned above. The main appointments are:

- to change the existing pier in order to support and interface with the telescope design (ground interface);
- to change the existing dome for an entirely retractable one (to operate the telescope in open-air conditions), while persistence of a collapsible wind screen with ventilation capabilities still should be considered;
- to add a new floor at ring level of the existing dome, that provides maintenance and engineering access to fork and tube equipments located above it, while thermally isolating the existing 2nd floor (with pier, ground interface and control equipment) from the open-sky upper level (with fork and tube).

Beside the implantation of the telescope in the existing building, a major task of the preliminary mechanical design is to define all interfaces with customer equipment and site, so that these interfaces are definitely set from the PDR.

The mechanical design goal is to provide a good overall stiffness (with first global eigenfrequency higher than 20 Hz), a mechanical stability suitable regarding the specification, and a robust cost effective design. Another goal of the mechanical design is to keep the beam path as short as possible, in order to limit the impact of the angular field spread. The mechanical design is also in charge of ensuring an almost deformation free support of each mirror.

Thermal Design

The *thermal design* (detailed in [RD03]) aims at controlling the impact of the solar flux on opto-mechanical elements, as well as controlling the temperature of the equipment so that the difference with respect to the ambient temperature is minimum in order to limit seeing degradation. This is done by heating and cooling of the main elements. Thermal design and control is difficult because of large variations of operating temperature and fast temperature variation (especially in the morning hours).

The thermal design mainly concerns the following equipment: telescope structure (shielding), telescope environment (paint/coating of the floor), mirrors M1 to M5 (heating and cooling concept), and obviously the heat stop. The assumption is made that a new floor (to be appointed – see above) thermally isolates the existing 2nd floor from the open-sky upper level exposed to the sun. That way, equipment that is part of the ground interface assembly or that is more generally located on the 2nd floor level (e.g. control equipment) is located in a temperature-controlled (or air-controlled) environment (ACE). This eases by far the thermal control of these items.

Thermal design also concerns the flushing system of the primary mirror and the telescope cable-wraps (or equivalent system) because of the cooling fluids.

Thermal design basic concepts and interfaces shall be set from the PDR.

Electrical Design

The *electrical design* (detailed in [RD04]) includes 3 aspects of the telescope design:

- electrical design itself (regarding power supply, electrical control, wiring, ...);
- mecatronics design (dealing with electro-mechanical equipments and their control);
- software design (mainly for control, thus mainly the Telescope Control Software).

Mecatronics on the MAST project mainly concerns the definition of the motion axes and the choice of equipment that performs each required motion respectful of the telescope's specified requirements. The main motion axes of the telescope are the Alt. and Az. rotation axes. Other motion axes of importance at equipment level include the M2 hexapod motion (to correct for M1-M2 operational misalignment) and the field derotator rotation axis. Further motion axes include possible guider telescope and wavefront sensor needs. The mecatronics part of the electrical design mainly deals with the control loops.

The TCS is sub-contracted to OSL and the TCS preliminary design is described in a separate document [RD06].

The electrical design – properly speaking and beside the mecatronics and software considerations – defines the electrical cabinets, the electronics equipment and the cables required to proper functioning of the control loops.

Electrical interfaces and basic concepts shall be definitely set from the PDR.

5. TELESCOPE STRUCTURE

The telescope structure is divided in 3 main assemblies: the tube, the fork, and the ground interface. This section deals with design aspects regarding those parts.

When reading this document, the reader should take the various drawings included in the DP in order to better understand the description of the items. The documents RD08, 09 and 10 are also necessary.

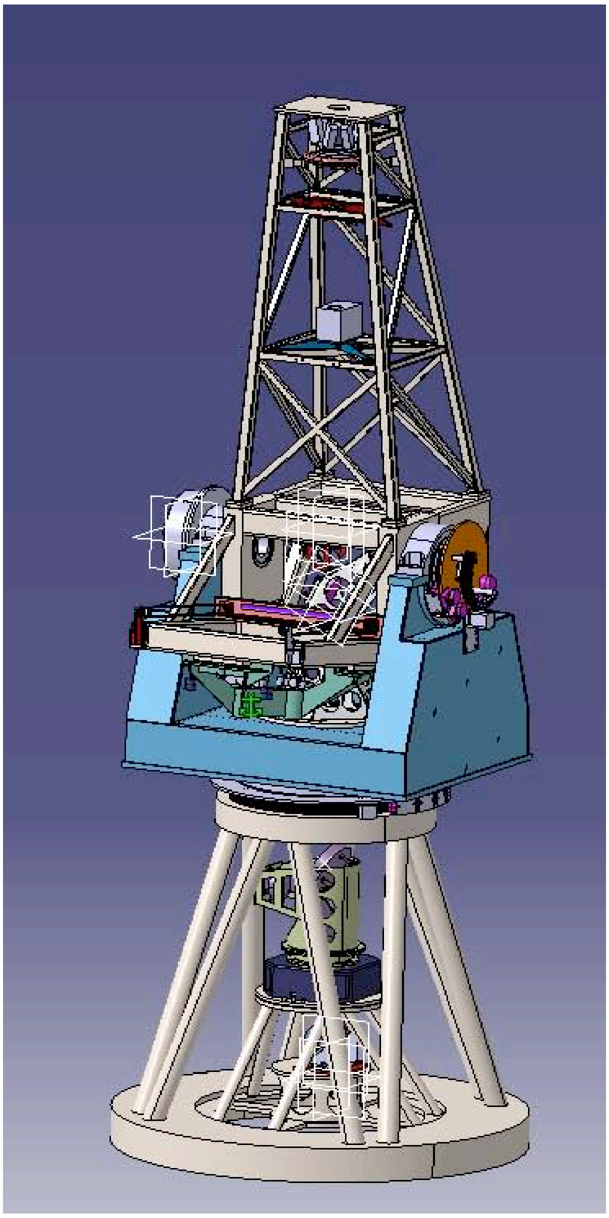

General view of the MAST

5.1 TUBE

The design selected for the tube is composed of the following elements, taking into account the decentring of the M1 mirror:

- a very stiff central structure connecting the two altitude shafts
- a reinforced struss structure to connect this part and the M2 hexapod interface and to provide an interface for the polarimeter
- the M2 unit which consists in an hexapod, the M2 and its cooling system
- the M1 unit connected to the central part thanks to a set of bars.

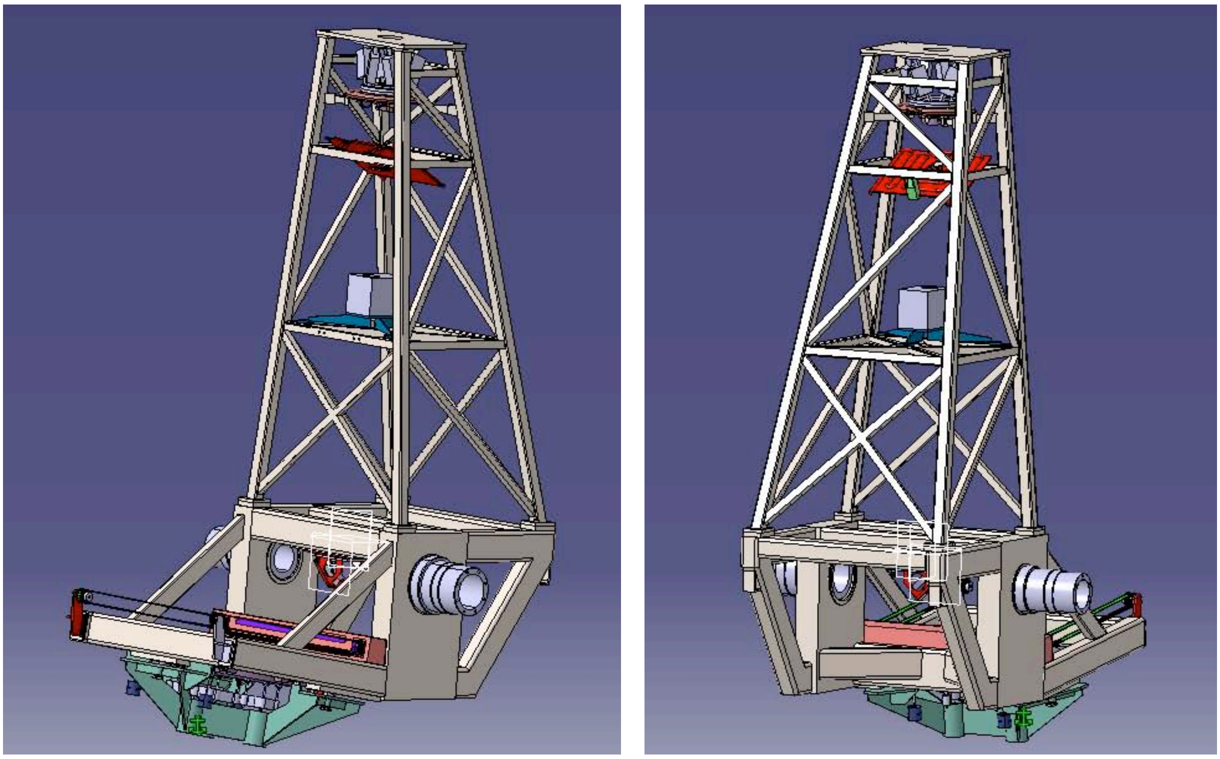

Assembly of the tube

The central part of the tube, which makes the connection between the two altitude axis supports, is called centrepiece. This part must be very stiff because its bending due to the dead weight of the M1 units and M2 units must be minimised. This part also increases the stiffness of the fork namely by blocking the anti-symmetrical mode of the fork arms.

The centrepiece described here is not classical due to the off axis optical design. It is composed of 2 steel welded box structures that support the altitude axis. They are connected by 3 transversal bars and 2 stiffeners. This design is due to the fact that space must be left free on the side opposite to the M1 mirror for the Coudé train structure, which is supported by the fork. The two altitude shafts are connected by screwing or welding to the 2 lateral sides of the centrepiece. The 2 shafts will be engaged in the 2 altitude bearing inner rings. The M3 unit is supported by a plate fixed to the transversal bars connecting the 2 lateral structures. Push-pull screws allow to align the mirror.

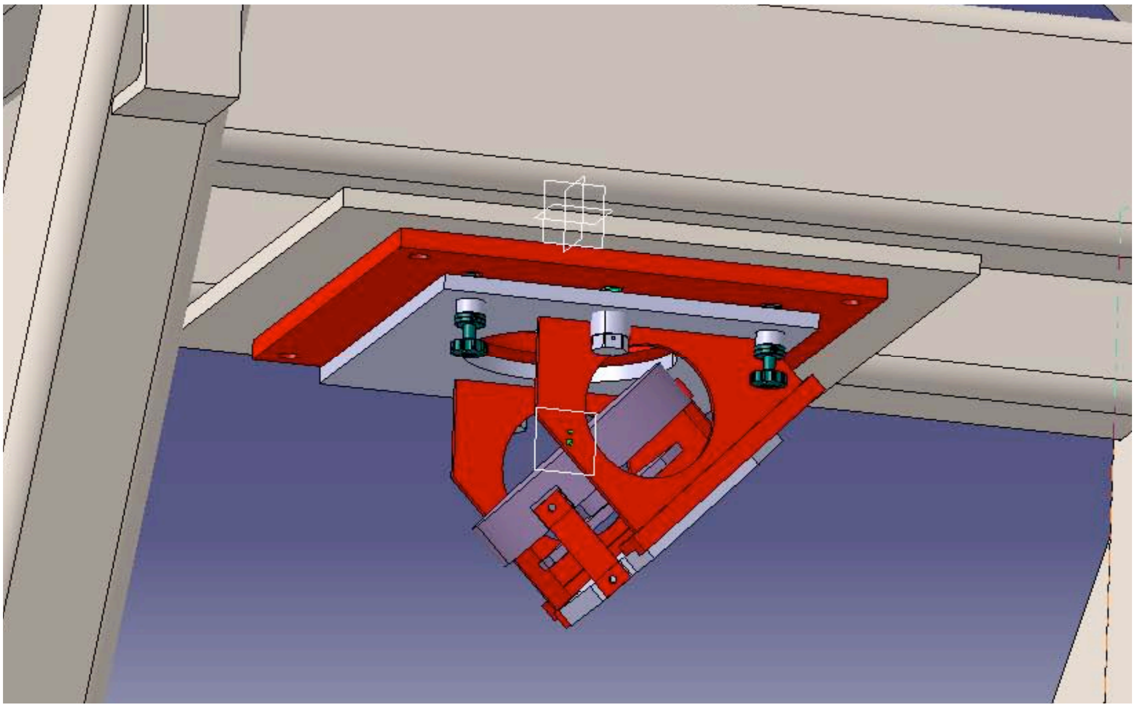

M3 unit

The M1 cell is directly connected to the centrepiece lateral side thanks to a set of bars and stiffeners.

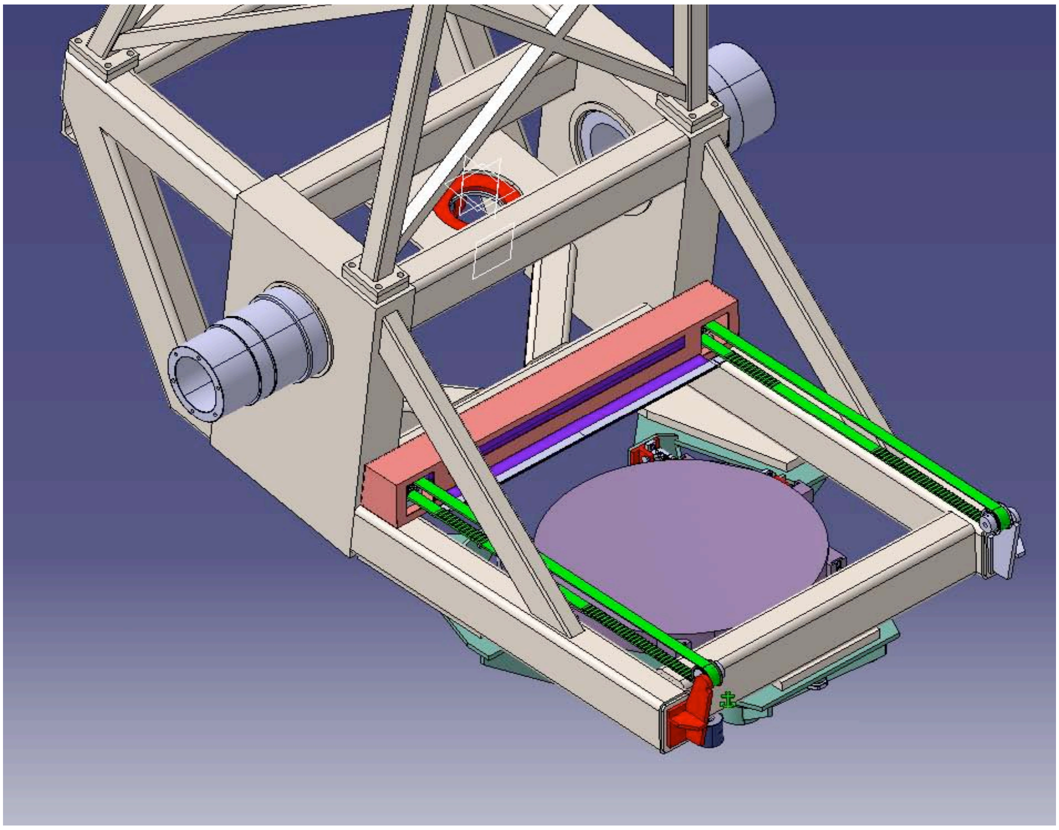

M1 unit connection to the tube

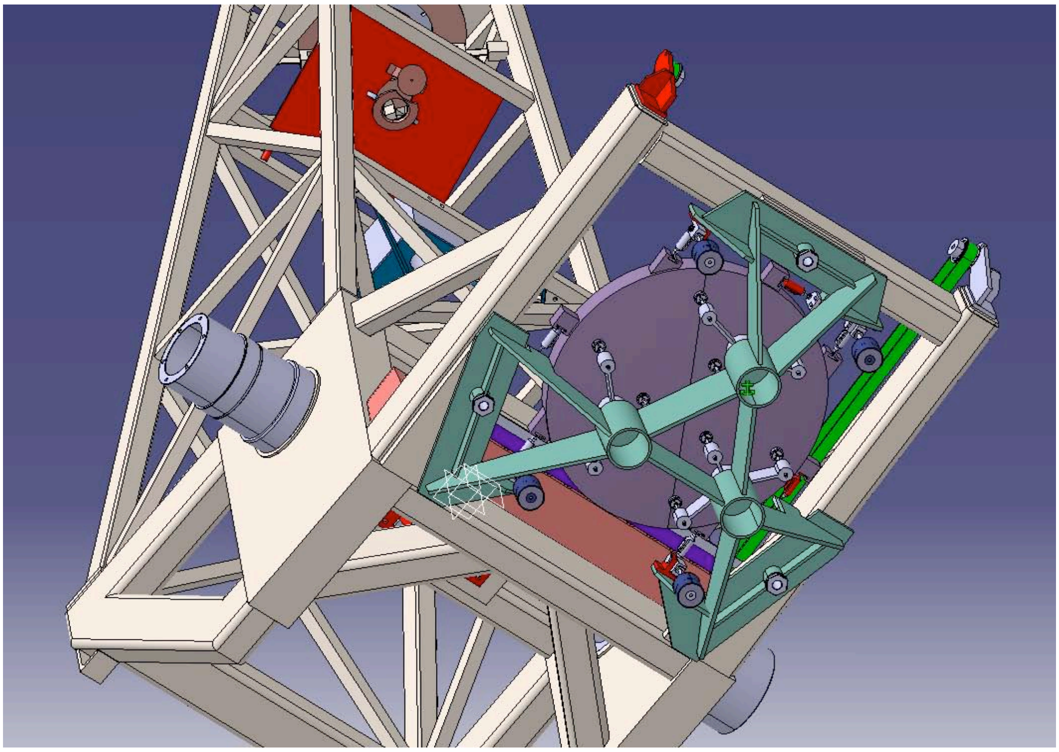

M1 cell interface

The M2 interface plate is connected to the centrepiece with a struss structure composed of 4 vertical bars reinforced by several stiffeners. This strut will be connected by screwing to the centrepiece. Adjustment using shims will be possible. It also supports the interface for the polarimeter and the heat stop. The polarimeter can be aligned wrt the optical beam using the fixation screws. Location pins will be added to allow the mounting/dismounting of the equipment without having to re-align.

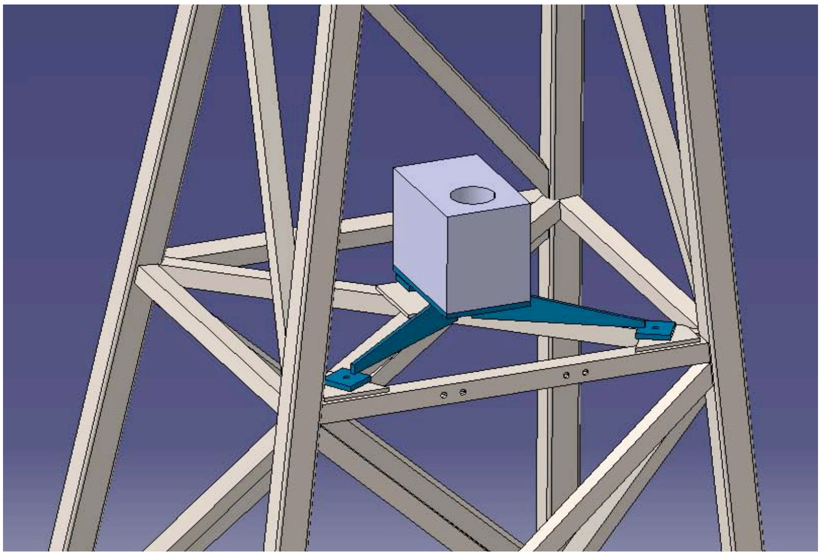

Polarimeter Interface

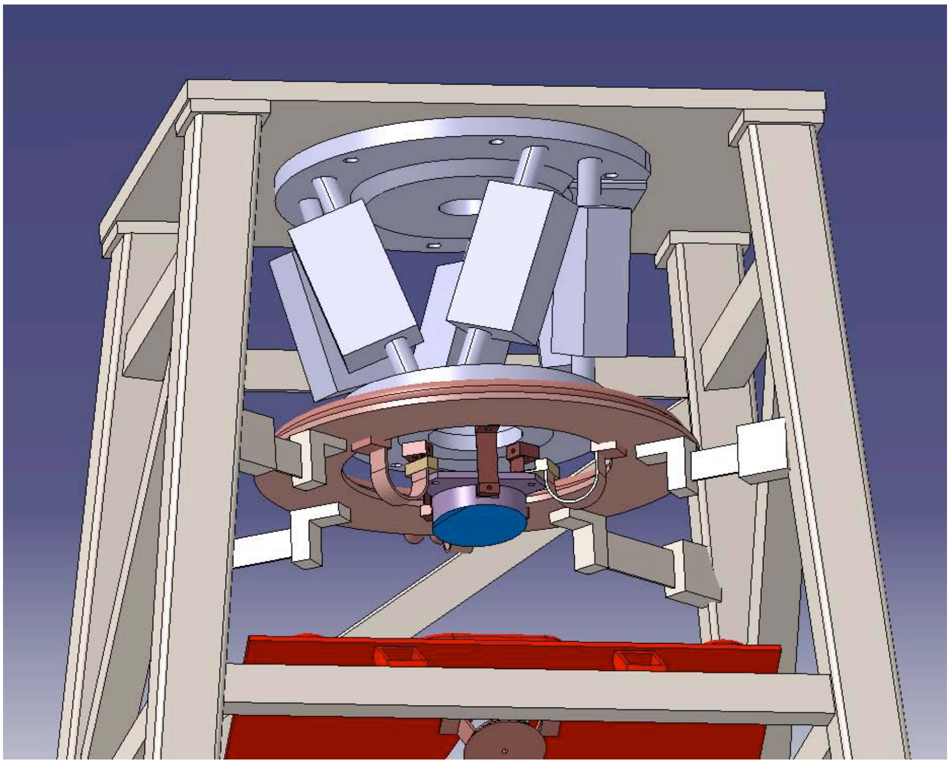

M2 unit, including cooling system

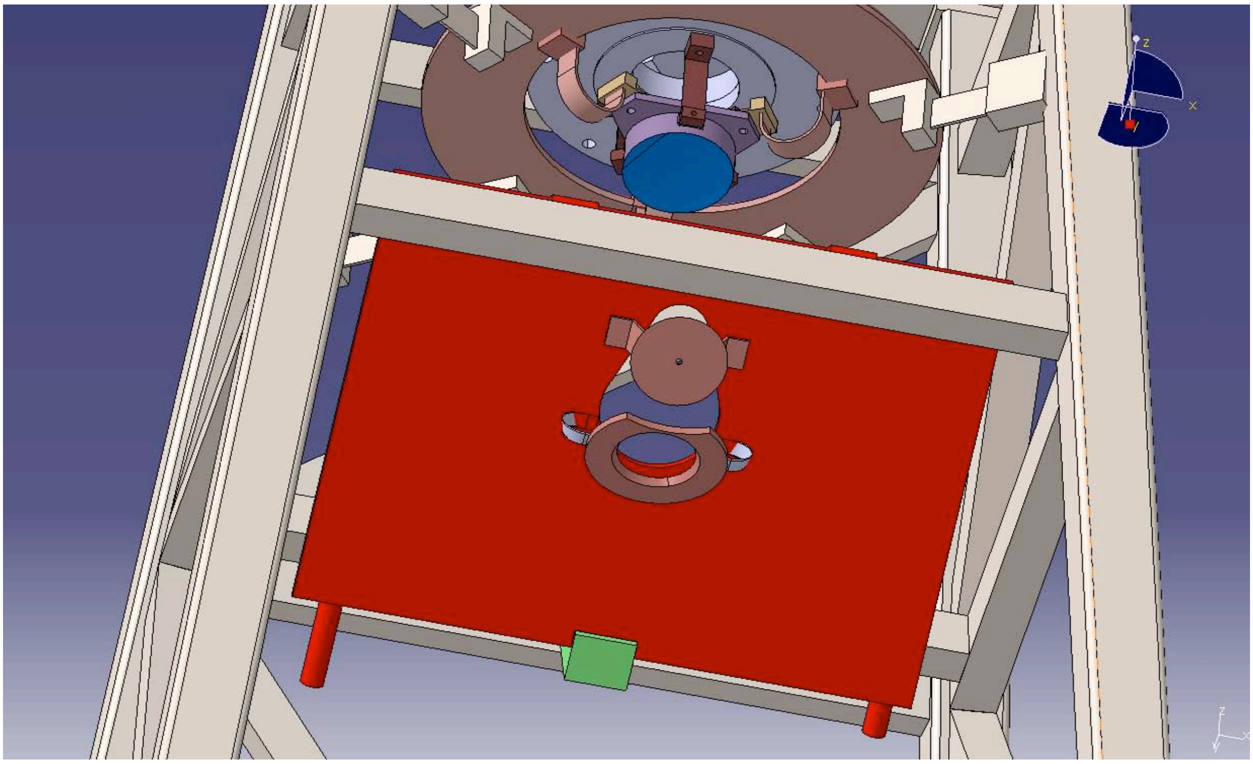

Heat stop and output pupil

Balancing of the tube will be insured by placing counterweight at dedicated locations on the structure.

5.2 FORK

The aim of the fork is to ensure the mechanical connection between the azimuth bearing and the two altitude axis supports. This mechanical shape of a fork is of course critical for the stiffness point of view and the bending modes of the fork are usually corresponding to the first eigenfrequency of a telescope. For this reason, this part has to be studied really carefully.

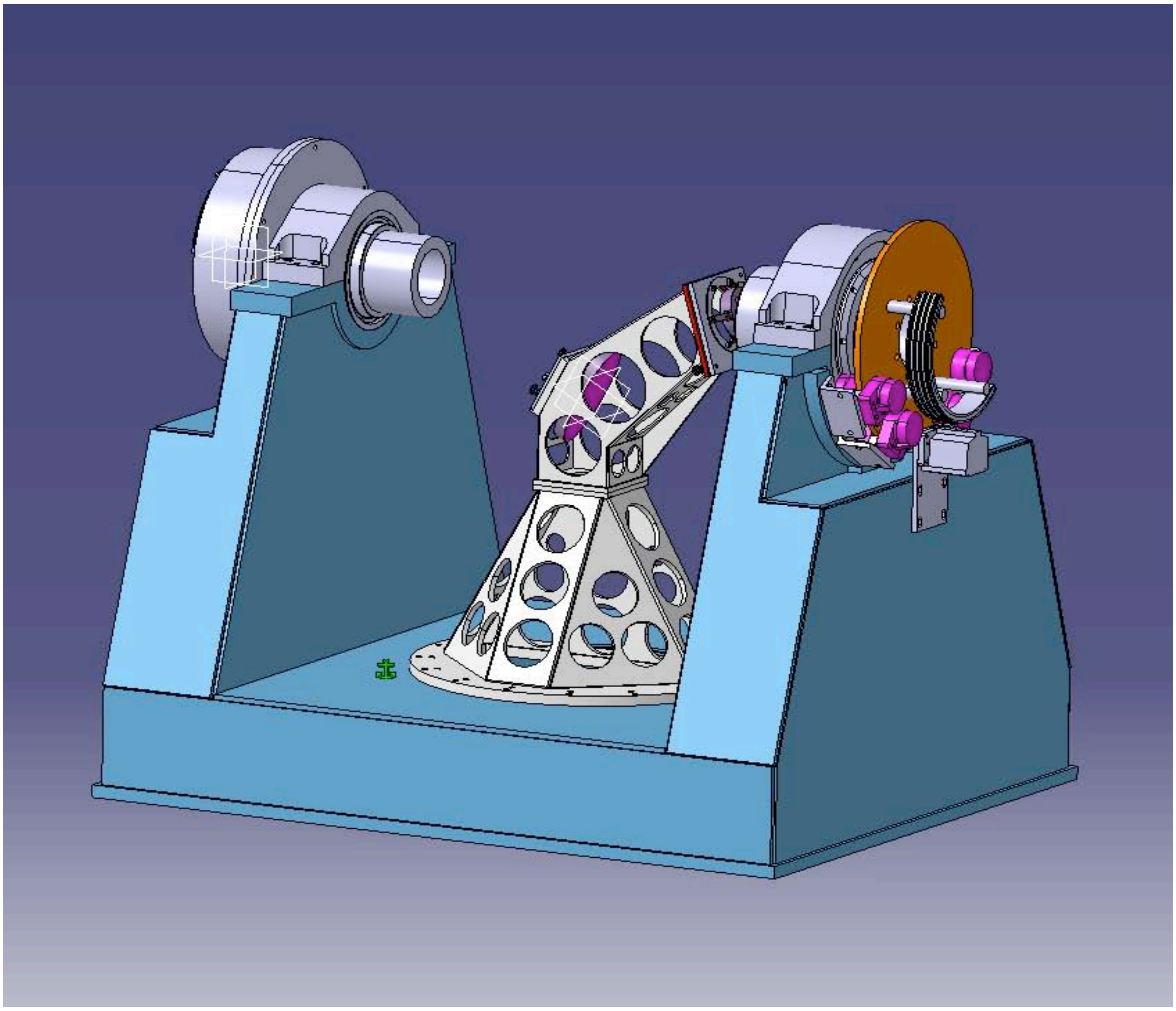

General view of the fork with the Coudé train from the altitude brake side

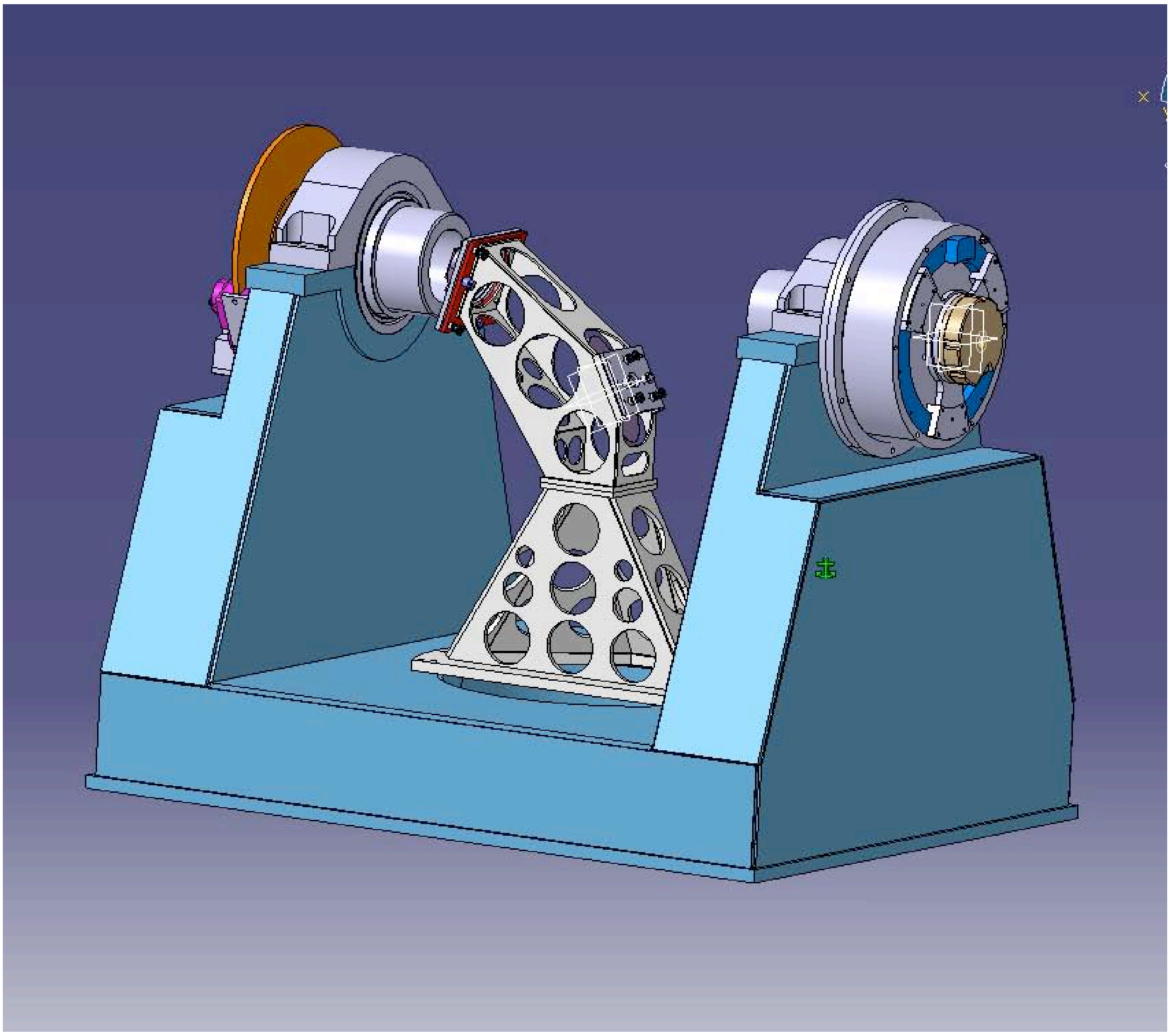

General view of the fork with the Coudé train from the altitude drive side

The fork has a classical shape with a stiff lower plate interfacing with the intermediate plate and with two rectangular vertical frames interfacing with the altitude axis supports on the upper side. The basis of the fork is formed by an inner cylinders and an outer rectangular shape structure with internal radial ribs and closed by two plates. Some circular ribs are also localised at the interface with the azimuth drive assembly. The two arms of the fork are two closed welded boxes with internal ribs. The thickness of all the plates and the localisation of the ribs is optimised to have a maximum of stiffness for a minimum of weight. Some apertures are foreseen in the fork structure to access to the screws for the fixation of the fork on the Azimuth drive Assembly.

The fork supports on one side the Altitude drive assembly and on the other side the Altitude brake assembly. These system are described in details in [RD04].

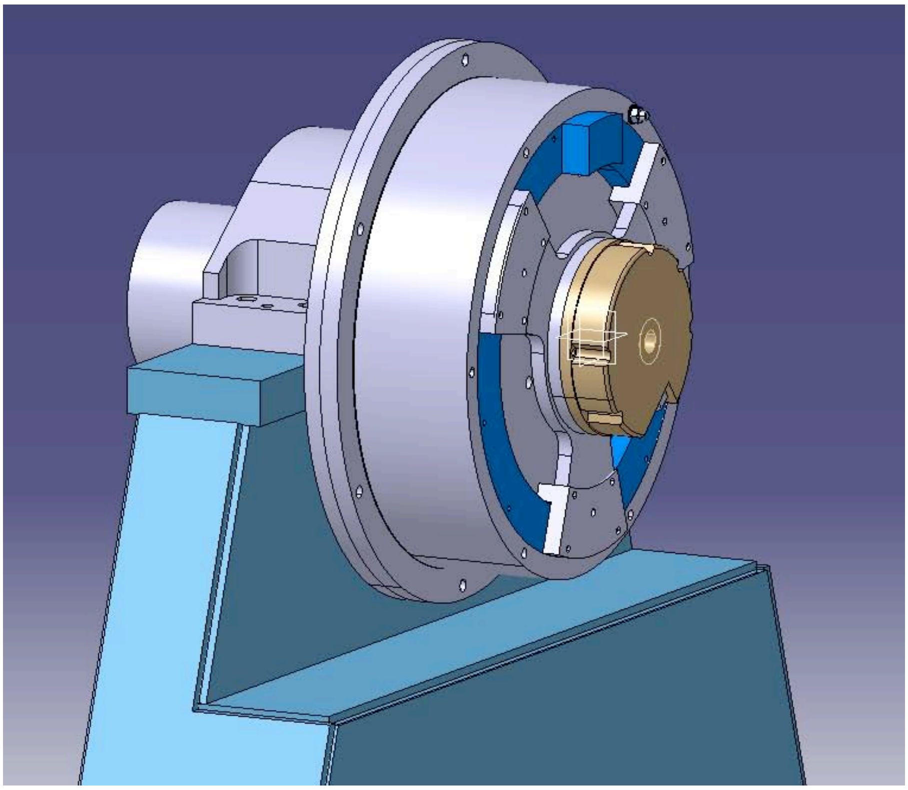

Altitude Drive System

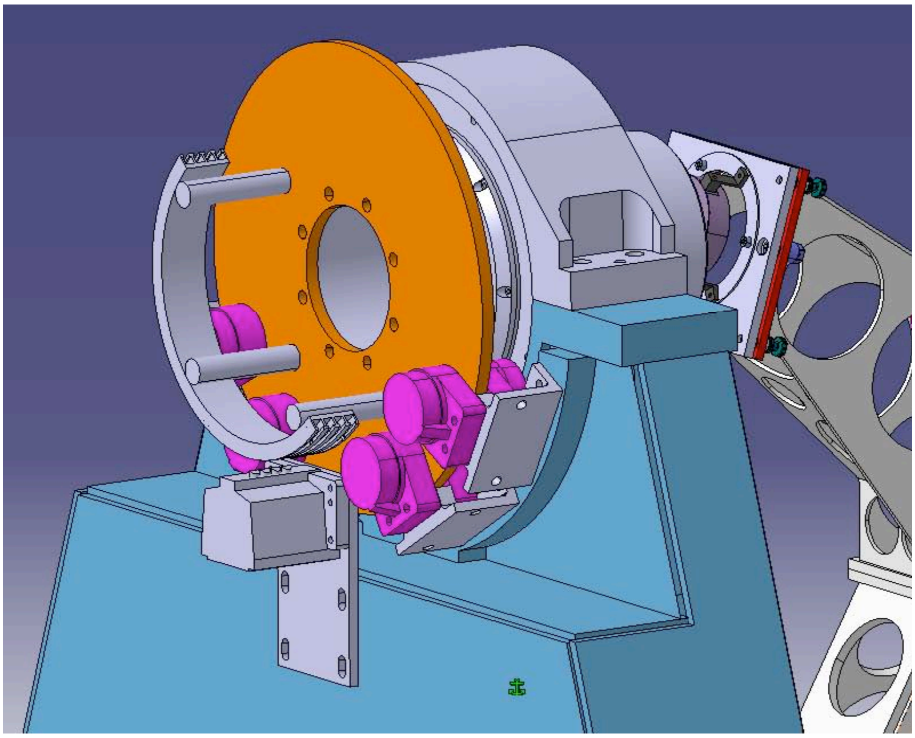

Altitude Brake and Limit Switches System

5.3 GROUND INTERFACE

The ground interface structure (GIS) is just a structure to connect the azimuth assembly to the pier.

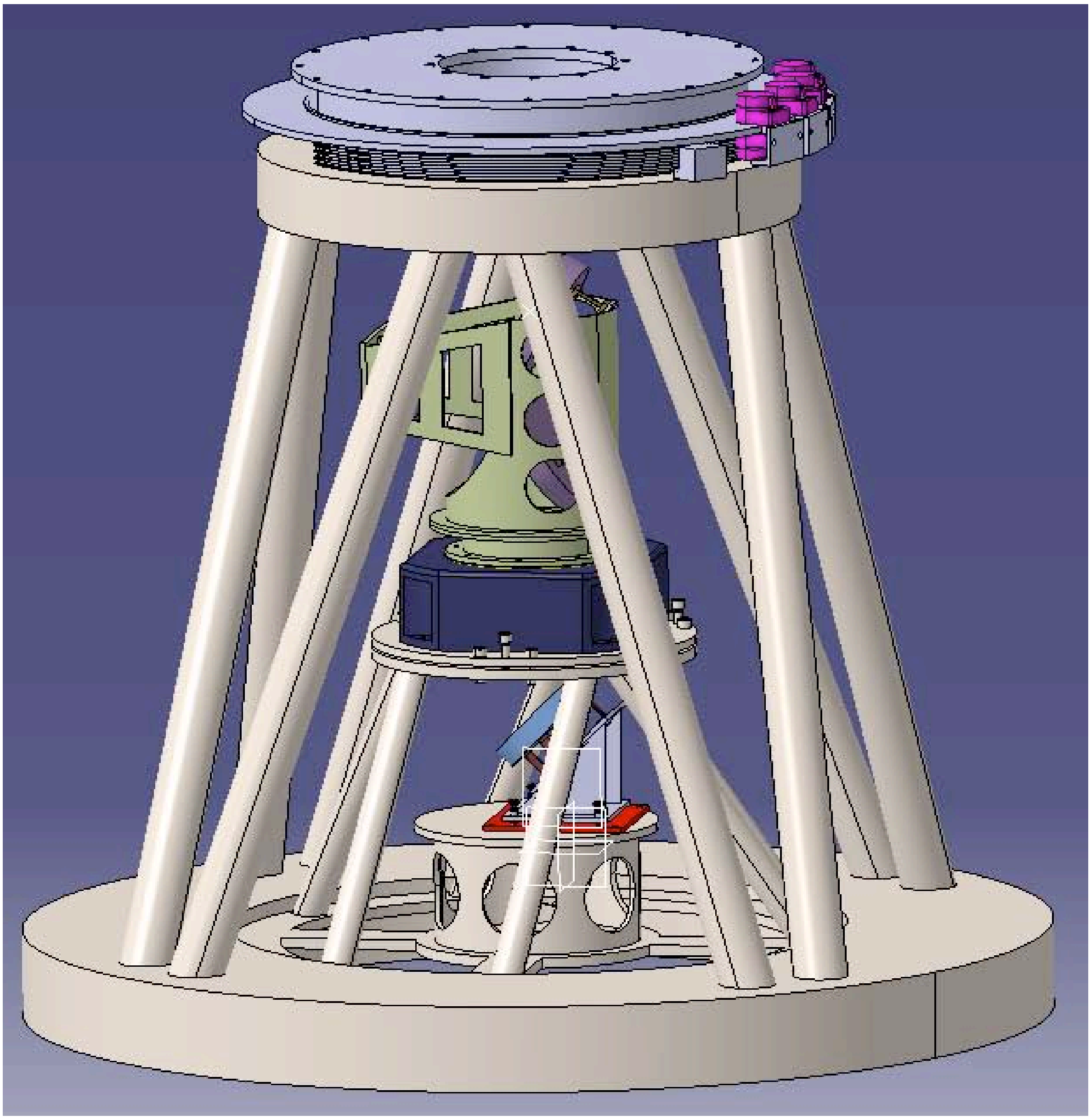

General View of the Ground Interface Structure

The GIS is a steel welded structure. The stiffness of this part must be as high as possible because it ensures the embedding of the telescope with the ground. This stiffness directly influences the global bending modes of the telescope that are classically the two first modes of a telescope. In addition, reservation must be foreseen in order to let the possibility to install/remove the derotator and to position the instrument at the M6 level as close as possible of M6 unit.

In order to fulfil these various requirements, AMOS has done the following design:

The GIS is made of 2 thick plates connected by 8 bars. The structure has been optimised by FEM in terms of stiffness. The upper face of the ground interface structure has some machining and drilling for the interface of the azimuth drive assembly, the brakes and the switches.

The lower plate will insure the interface with the pier. AMOS has foreseen manual levelling table to align the telescope on the pier. After alignment, concrete without restraint will be poured in order to anchor the telescope on the pier.

The M6 unit Assembly is fixed on the lower part of the GIS, as well as the field derotator. Both are connected to the GIS thanks to dedicated mechanical structures. The field derotator design philosophy has been done so that it can be mounted/dismounted. Location pins insure repeatability of the mounting of this assembly on the telescope.

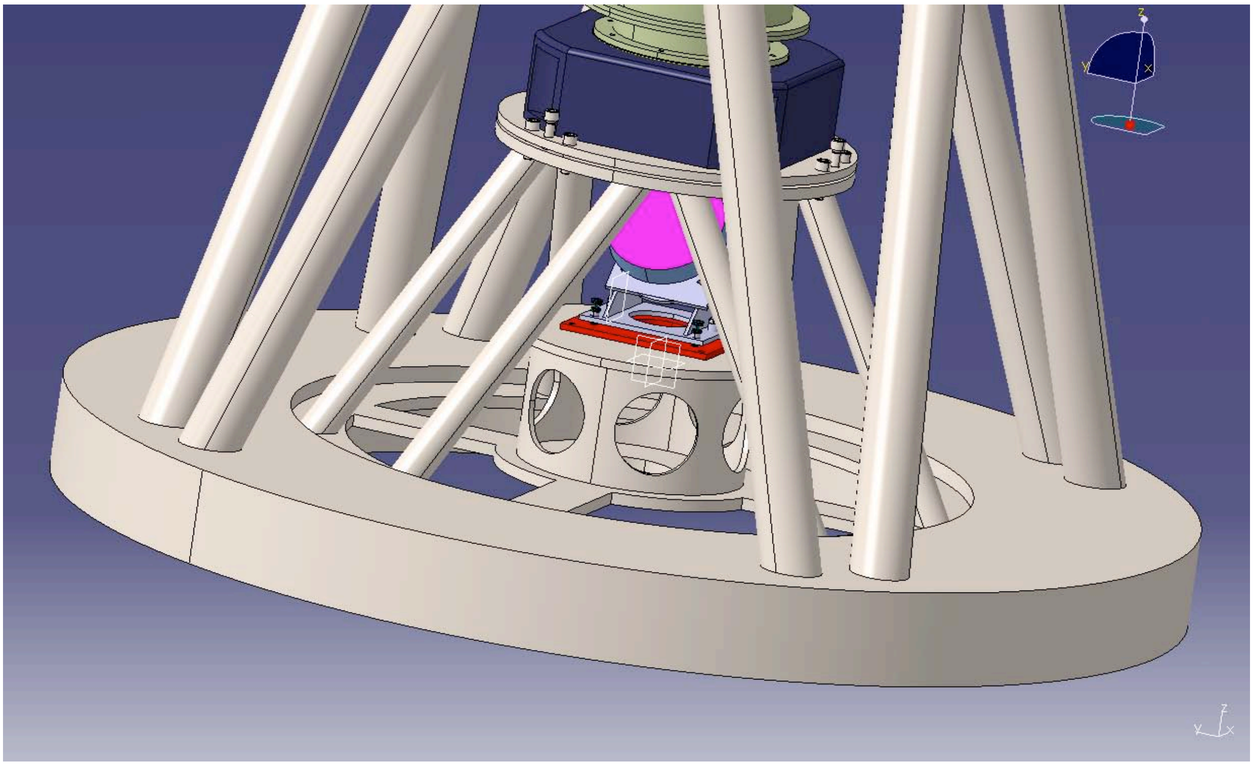

M6 unit and Field Derotator support structures

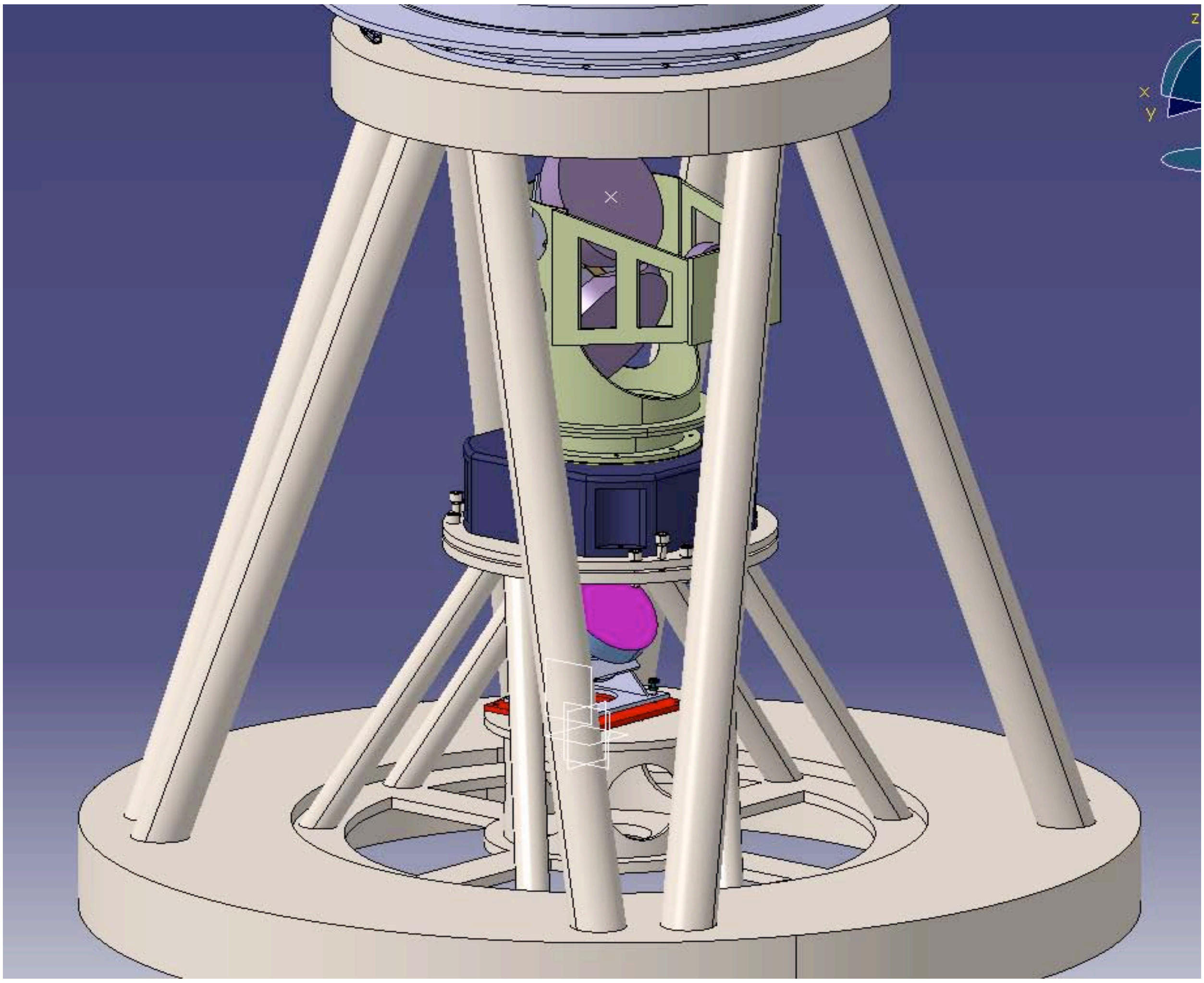

M6 unit and Derotator Assembly

6. MIRROR UNITS

The telescope includes several mirrors with related equipment (mechanical supporting cells with alignment features, thermal control, protection) taken as units. This section deals with design aspects regarding those mirror units.

6.1 M1 UNIT

The M1 cell is descibed in details in the document [RD09]. Concerning the mirror support system, it is deeply detailed in the document [RD10].

The following figures show the M1 unit. One can see on the first picture the 3 screws that will allow to align the M1 Cell with respect to the tube structure.

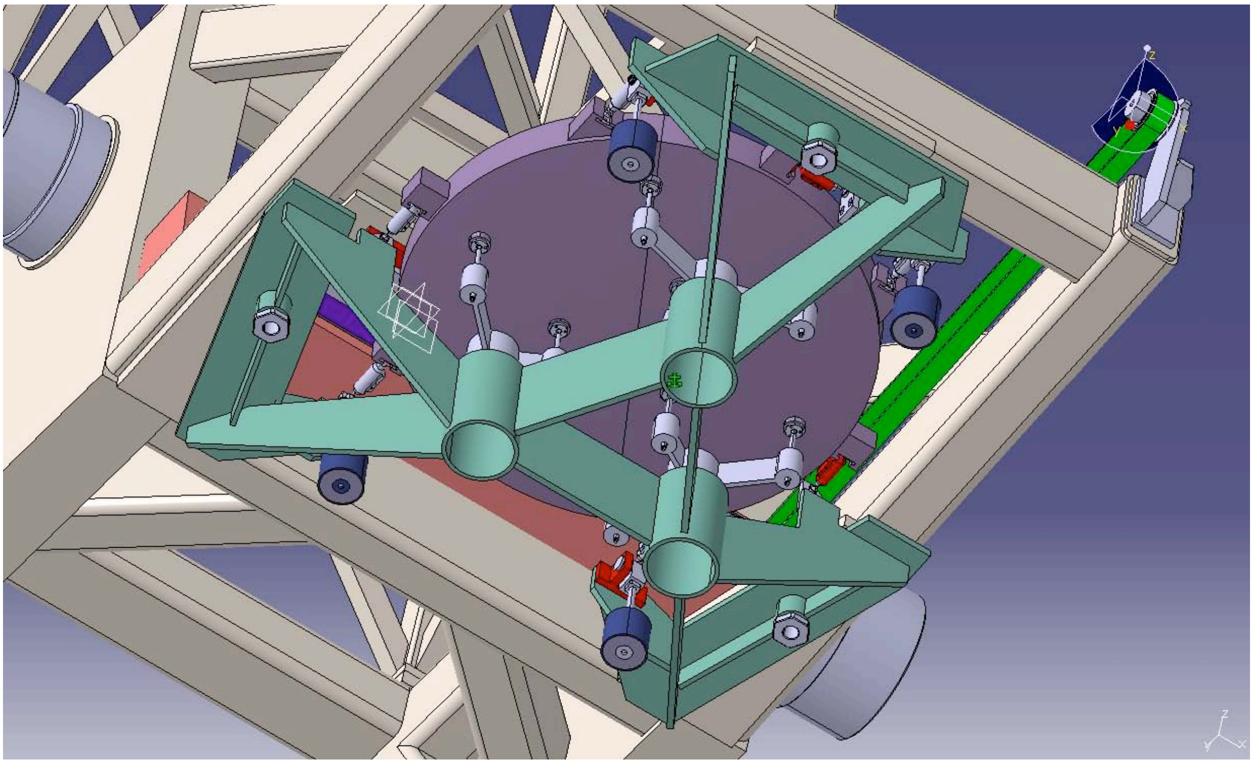

M1 Cell from the back side

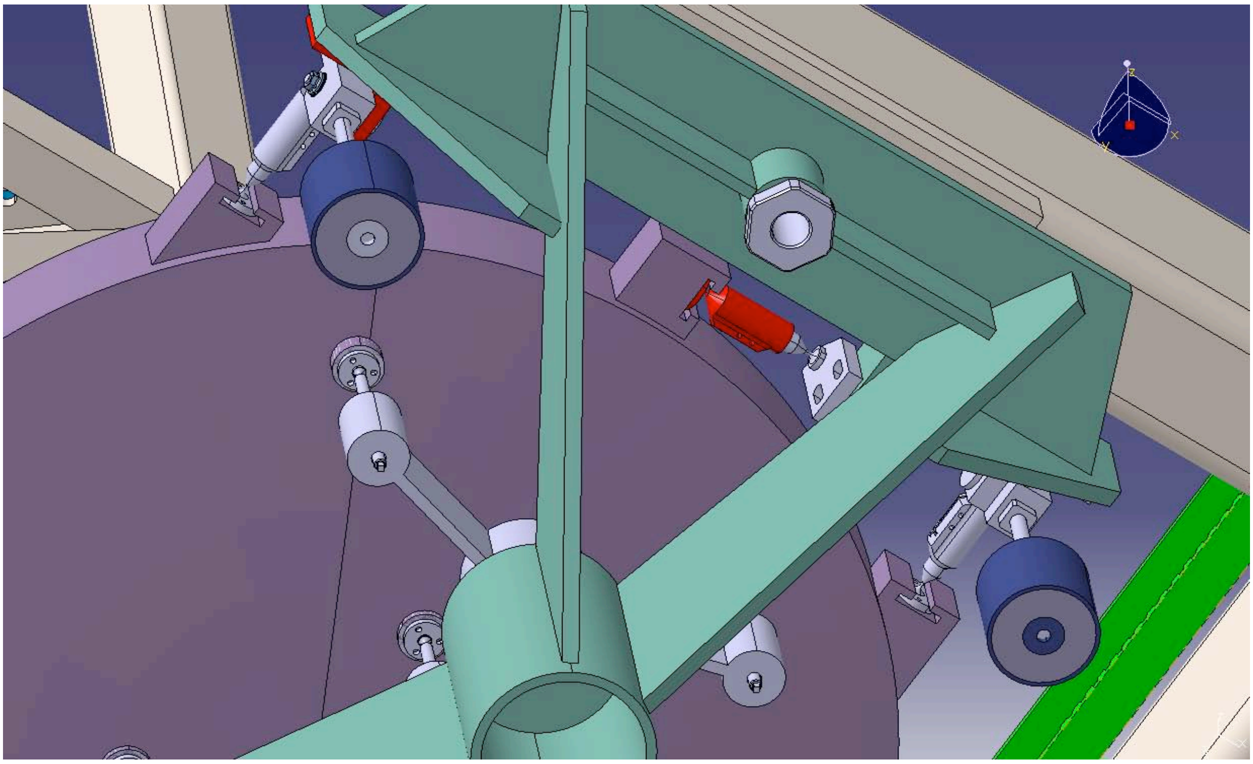

**Cell Adjustment screw, Axial support system,
Lateral support system and anti rotation device**

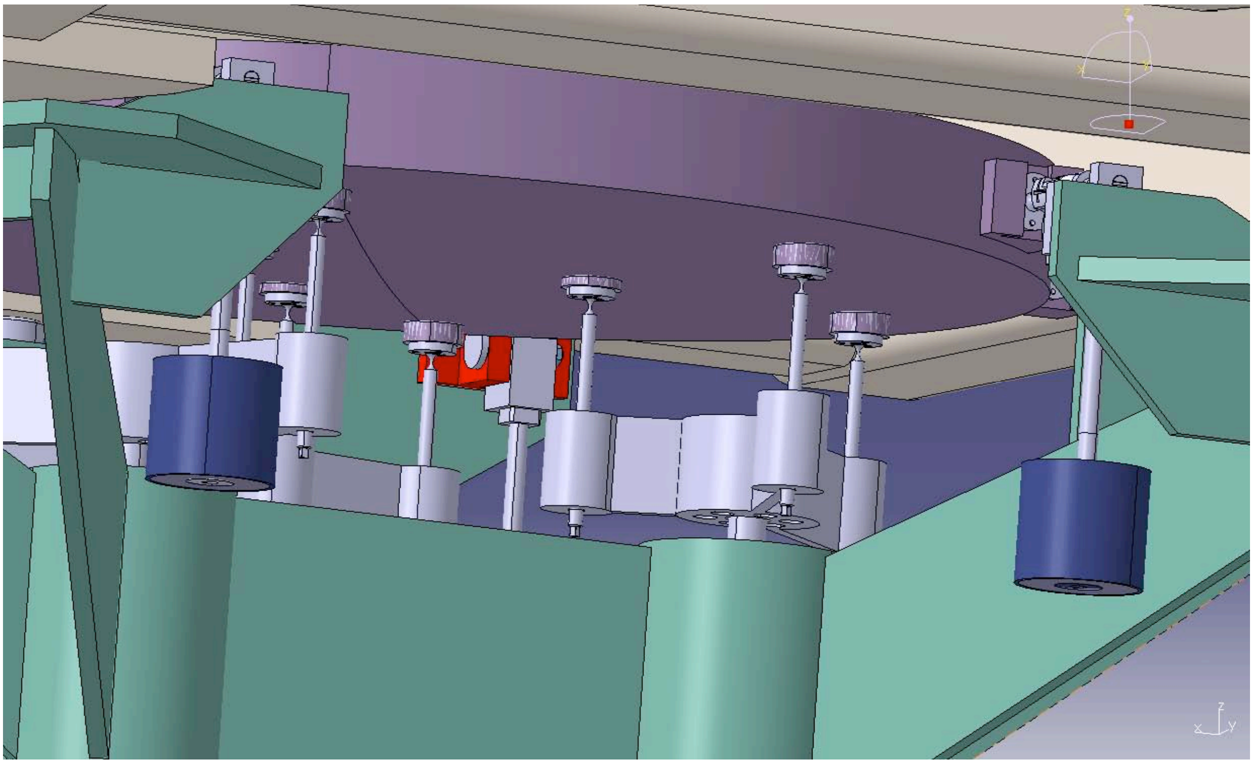

Axial support system, needle

6.2 M2 UNIT

The M2 unit is composed of the hexapod, which is fixed to the strut structure of the tube and the M2 mirror and its support system and cooling device. It is represented on the following figure. The hexapod allows to move the M2 in tilt, decentring and translation.

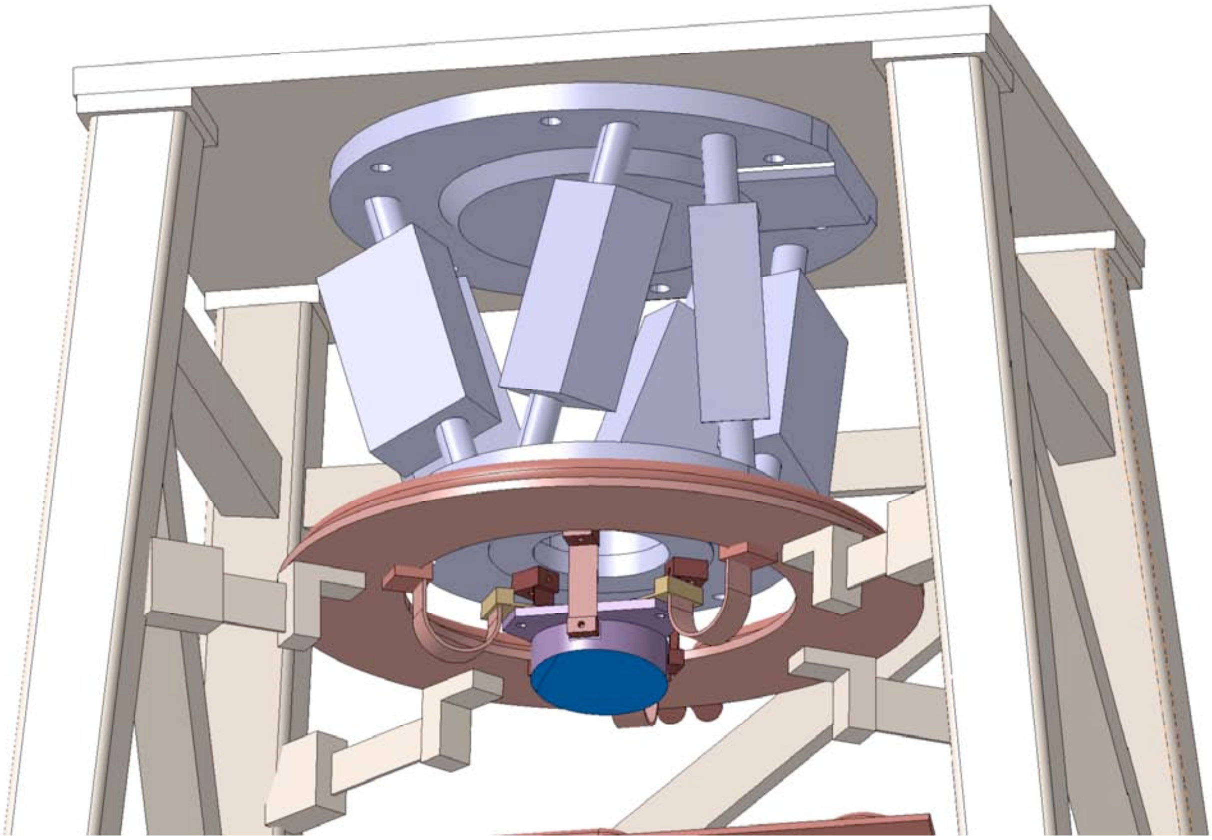

M2 unit

6.3 M3 UNIT

The M3 unit is shown on the following picture:

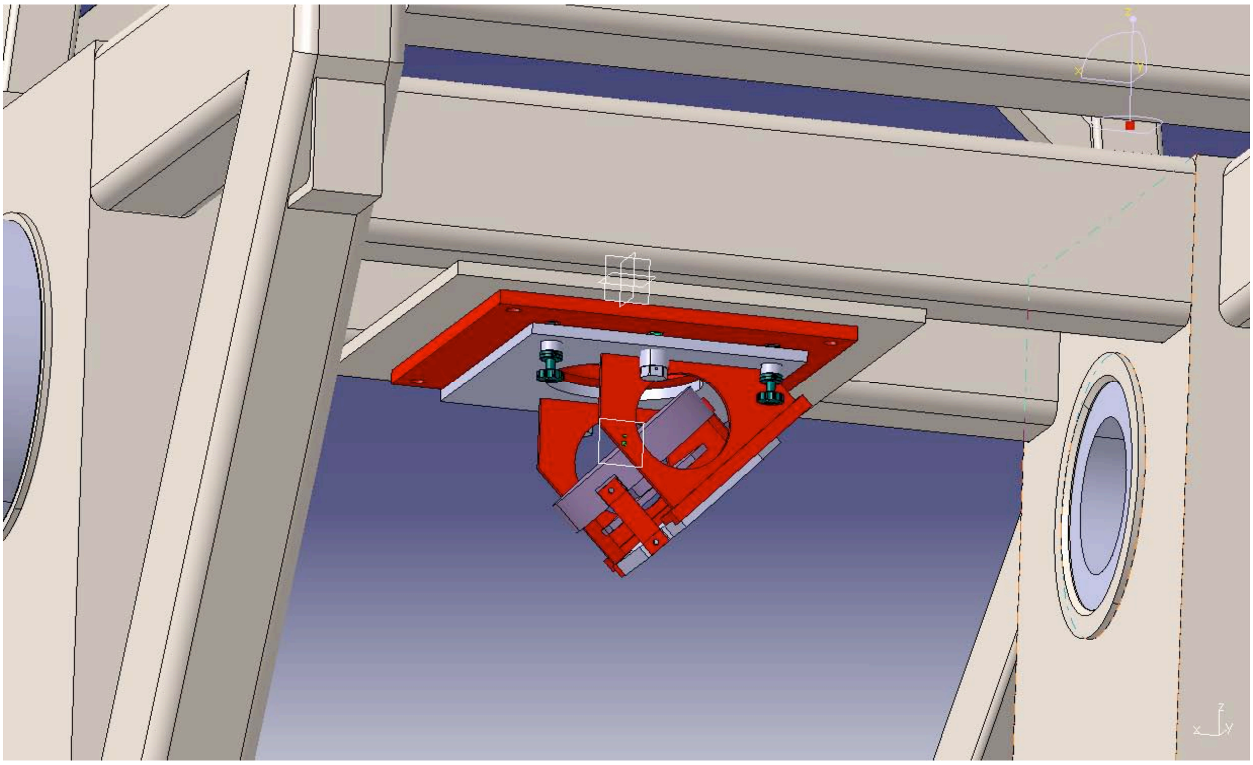

M3 unit

One can see on the figure that the alignment system of this mirror is a push pull screws system.

6.4 COUDÉ UNIT (M4-M5)

The Coudé Train unit is an assembly of lightweighted plates. It supports M4 and M5 mirrors and cells. Adjustment devices are foreseen on the assembly for the alignment of the mirrors. Push-pull screws will be used.

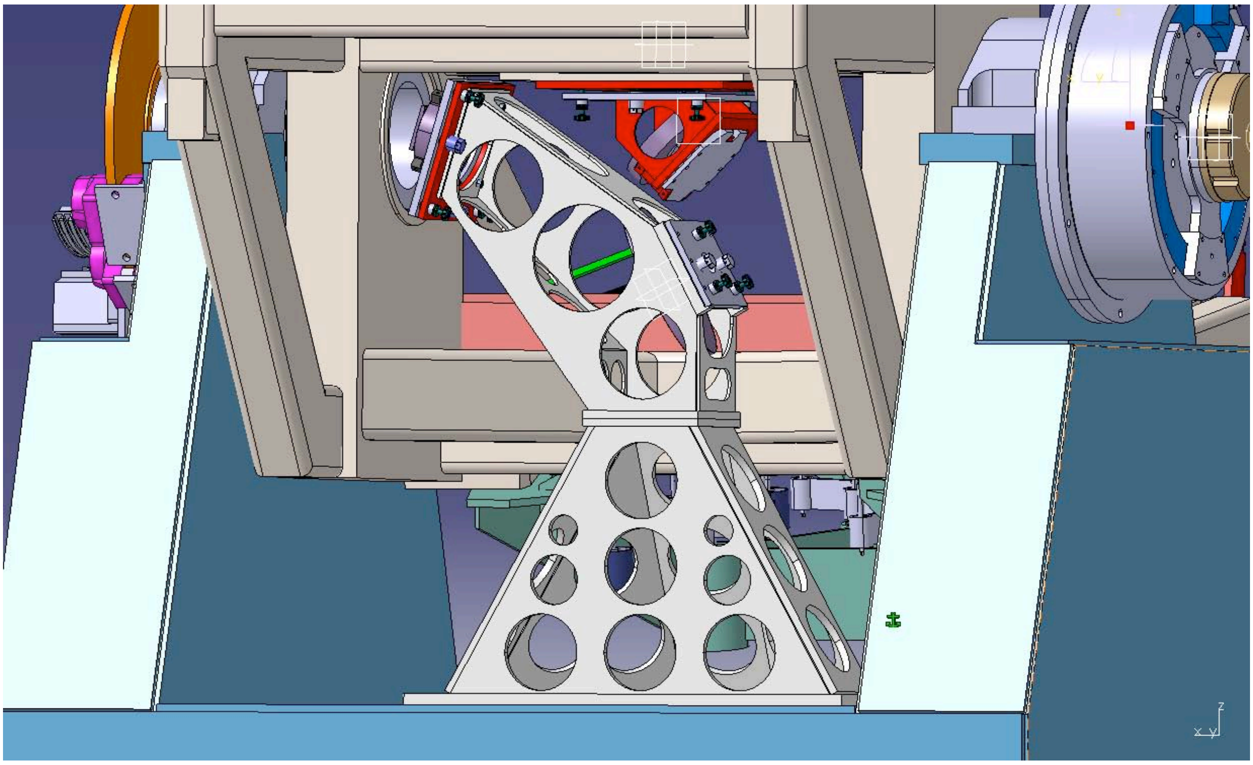

Coudé Train Assembly on the fork

6.5 FIELD DEROTATOR UNIT

This assembly is designed to support the 3 mirrors that are used to make the derotation of the optical field. So this is a very stiff cylindrical structure that supports the 3 mirrors and mount and that is supported by an off-the-shelf motorized turntable with a big clear aperture of 250 mm. The mechanical interface of this item is done so that the system can be mounted/dismounted. Location pins insure the repositioning.

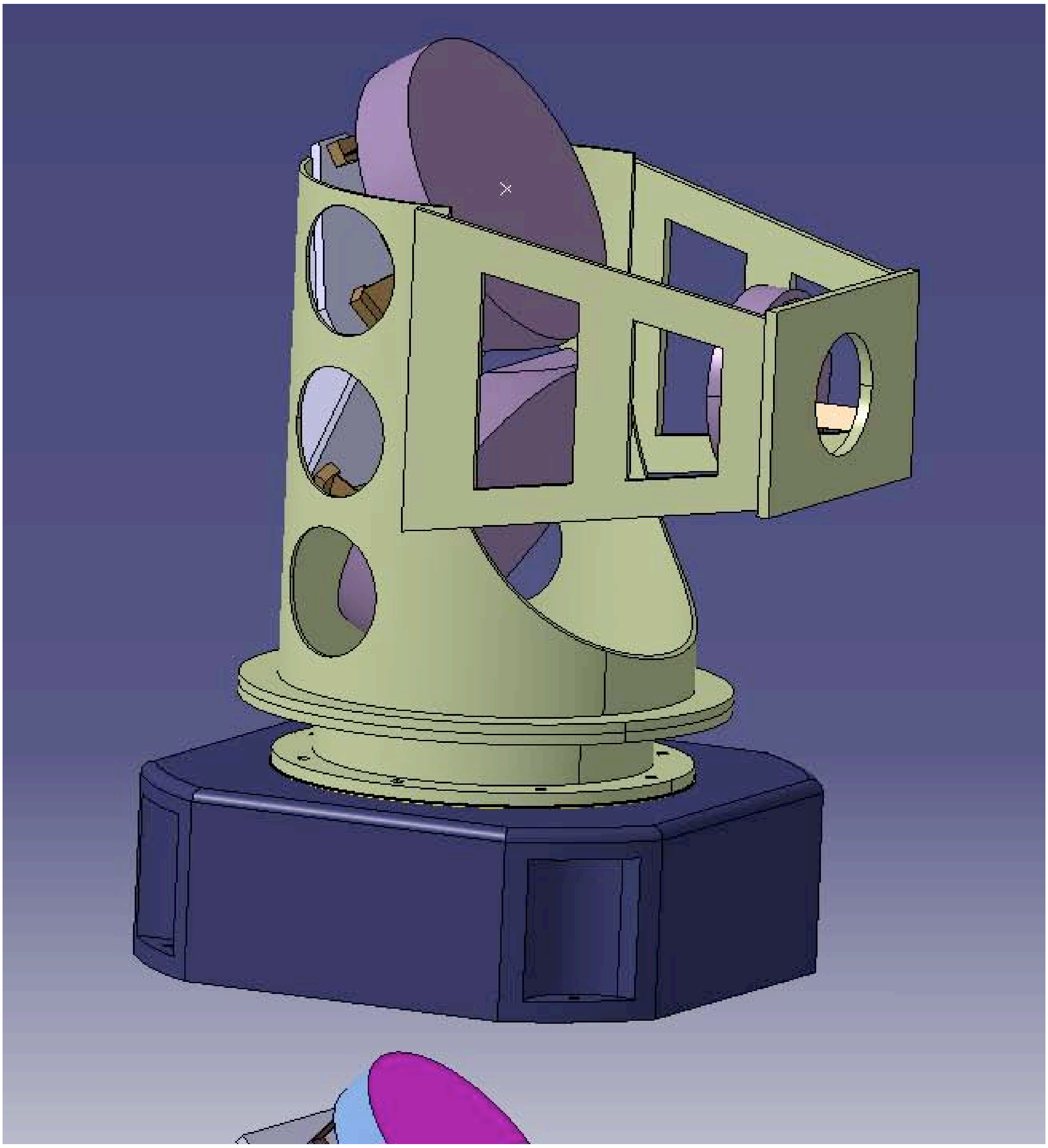

Field Derotator Assembly

6.6 BACK-END FOLDING UNIT (M6)

The M6 unit consists in an assembly similar to the M3 unit. The same system of push-pull screws is used for the alignment of the mirror.

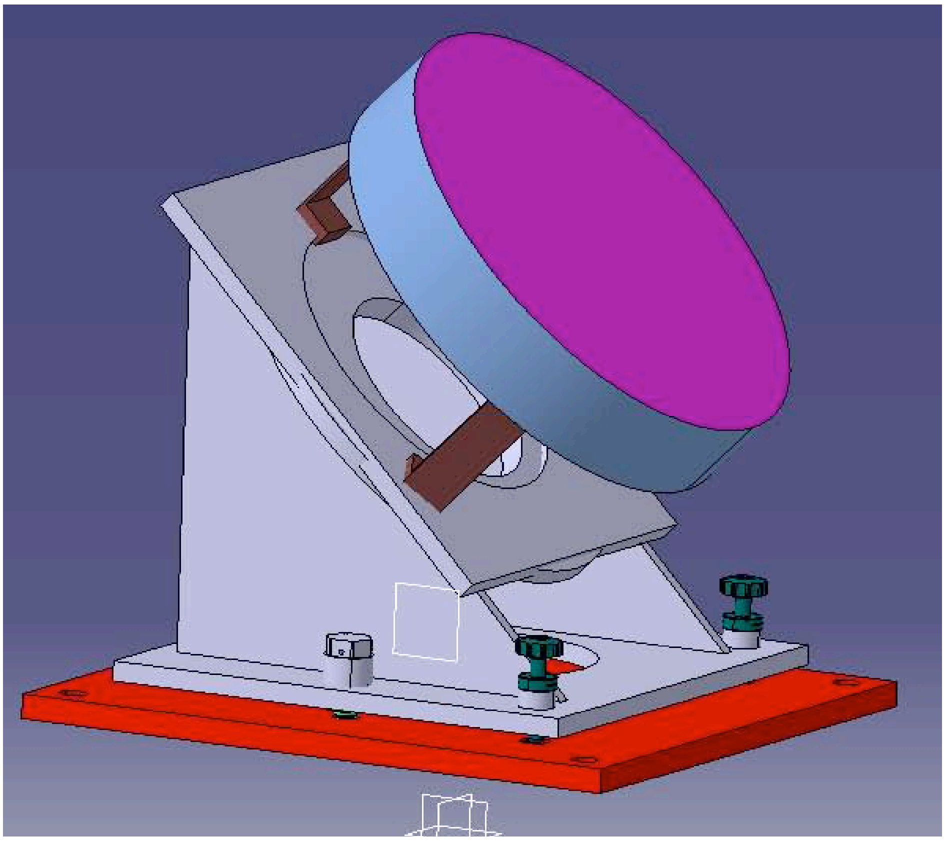

M6 unit

6.7 WFS PICK-OFF UNIT

This item is not yet mechanically defined.

7. AUXILIARY ITEMS

Beside the telescope main structure and the mirror units, some auxiliary equipment is required, that takes place on the telescope or in the close vicinity of the telescope. This section deals with the design aspects regarding those auxiliary items.

7.1 M1 COVER

The M1 mirror will be protected by a retractable cover. The cover will be composed of a cloth wind up around a drum. A motor will extend the cloth while a torsional spring located inside the drum will help retracting it. Two limit switches at both ends of the stroke will limit it.

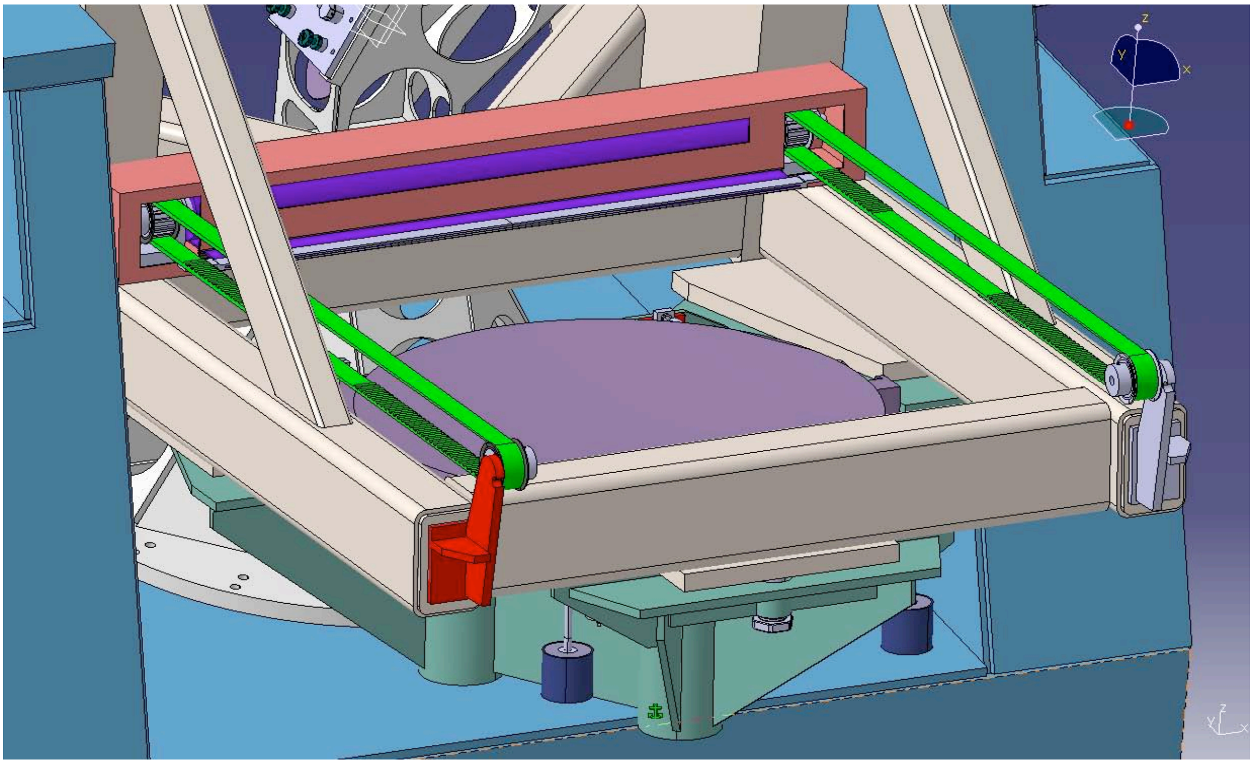

M1 cover System

7.2 M1 FLUSHING

Not yet mechanically defined.

7.3 HEAT STOP

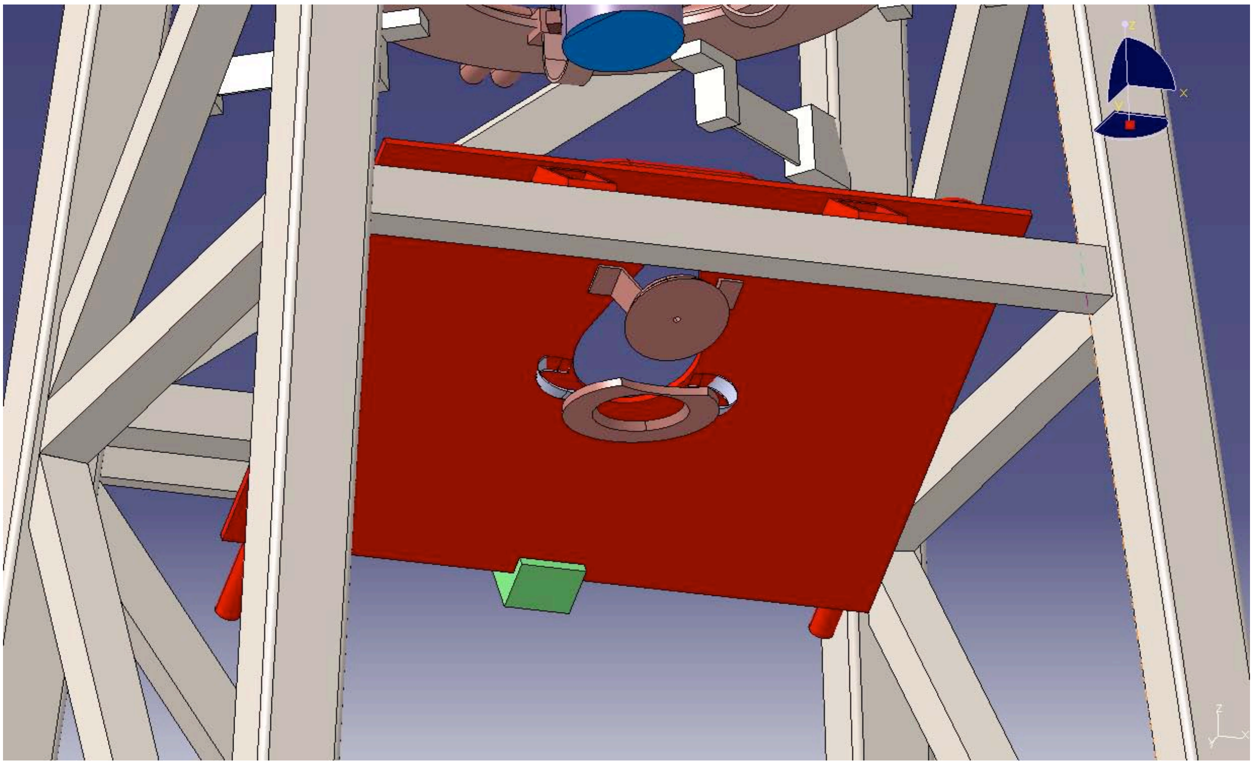

Heat stop and Output pupil stop

This equipment is described in details in the document [RD03].

7.4 OUTPUT PUPIL STOP

See figure in §7.3. This equipment is described in document [RD01].

7.5 GUIDER TELESCOPE

This equipment is not mechanically defined. The guider will be placed on the tube of the telescope, in a position so that it will have the same pointing axis as M1.

Consideration about the guider can be found in [RD01].

7.6 WAVEFRONT SENSOR

This item is not yet mechanically defined. Consideration about the guider can be found in [RD01].

7.7 ALTITUDE CABLE-WRAP

The altitude cable wrap connects the tube to the fork. The cable wrap will not be motorized and will be located close to one altitude bearing.

7.8 AZIMUTH CABLE-WRAP

The cable wrap system must allow doing an angle of 200° with the azimuth axis. We have decided to place the cable wrap under the level of the fork. The fixed part of the cable wrap is supported by a mechanical structure that lies on the ground of the room.

To reduce the friction budget for the azimuth axis we have decided to motorise the cable wrap. In this case, the cable wrap has to be synchronised with the telescope.

The cable wrap also supports the electrical cabinets.

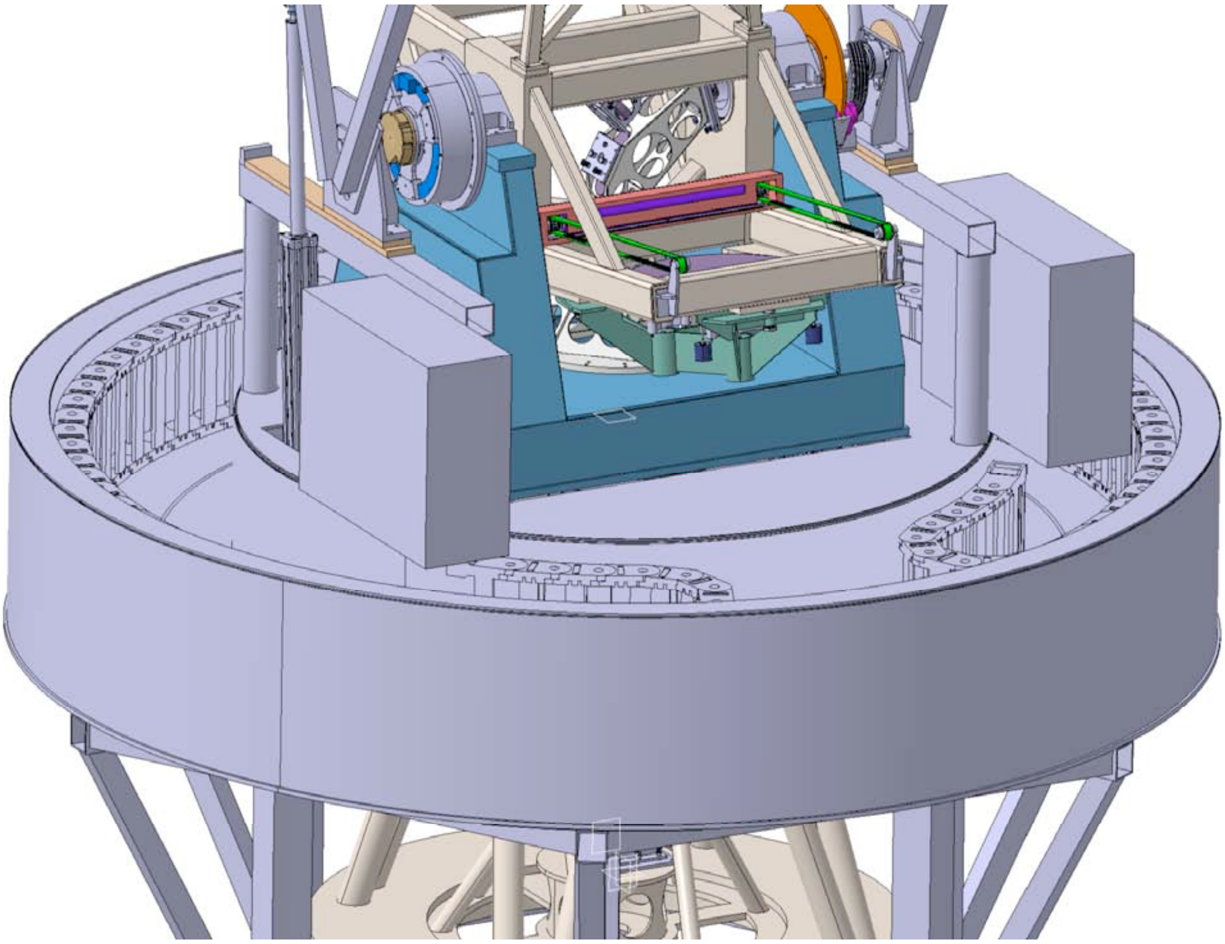

Cable Wrap General View

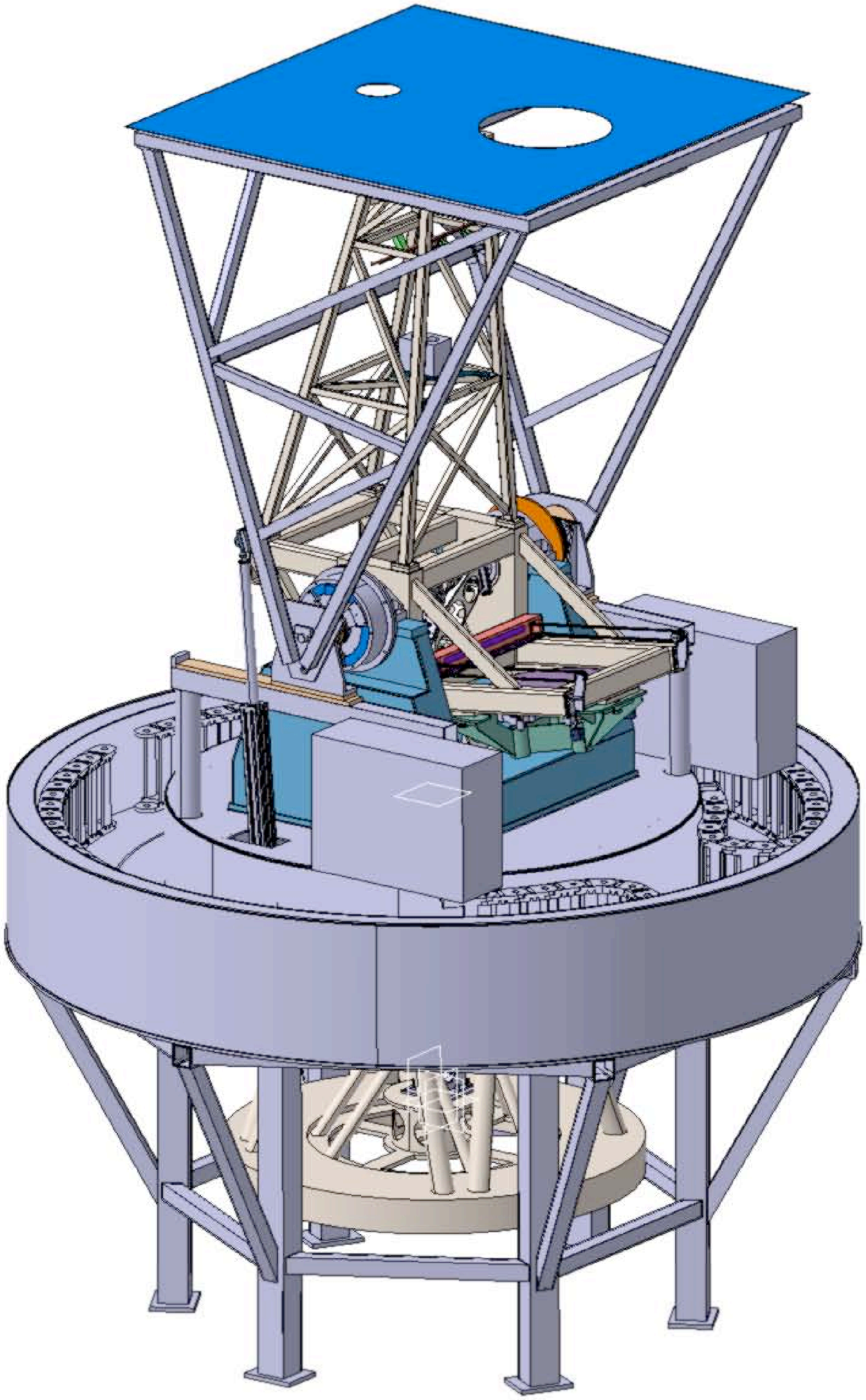

Telescope with the Cable Wrap and the Upper Sunshield

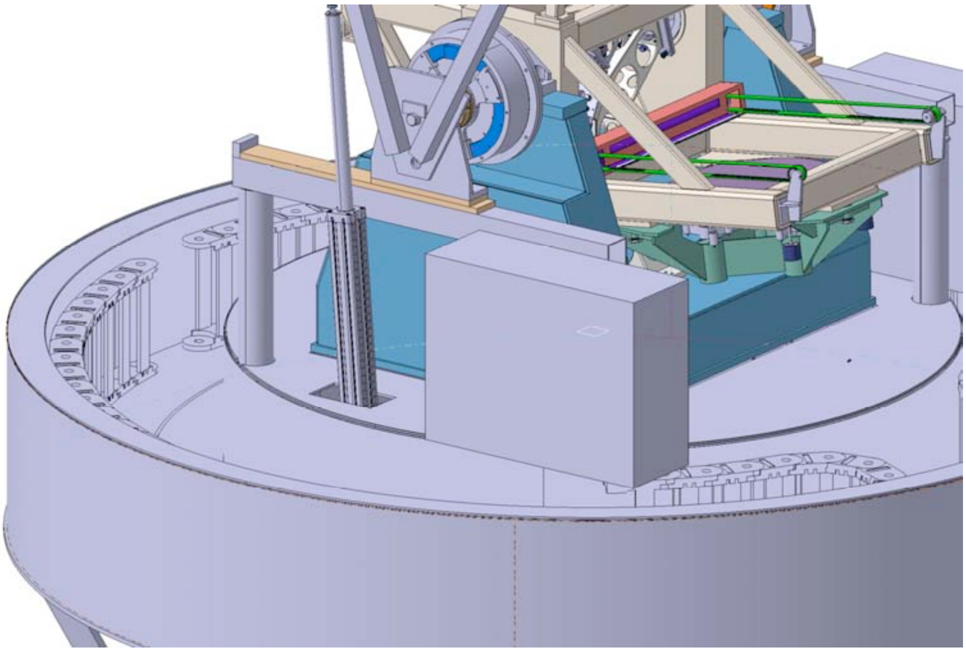

Actuator of the Upper Sunshield and electrical cabinets

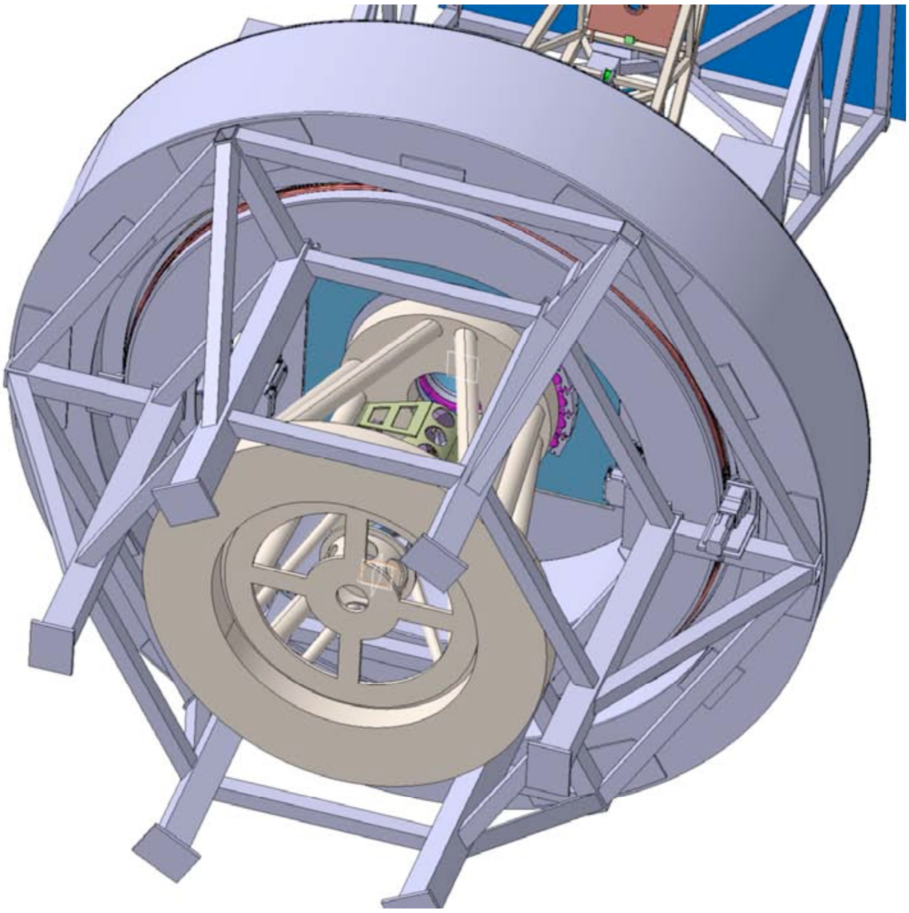

Lower view of the Cable Wrap

7.9 UPPER SUN SHIELD

The upper sun shield is used to protect the telescope structure from the heat due to the sunbeam. It consists in a mechanical structure ended by a cooled top plate. 2 holes are made in this top plate, one for the M1 and one for the guider. The system is motorized by two linear actuators, one on each side of the telescope. During maintenance, it will be possible to disconnect the upper sun shield from actuators and to move the sun shield 500 mm horizontally and perpendicularly of the elevation axis. This will allow access to elevation motorization.

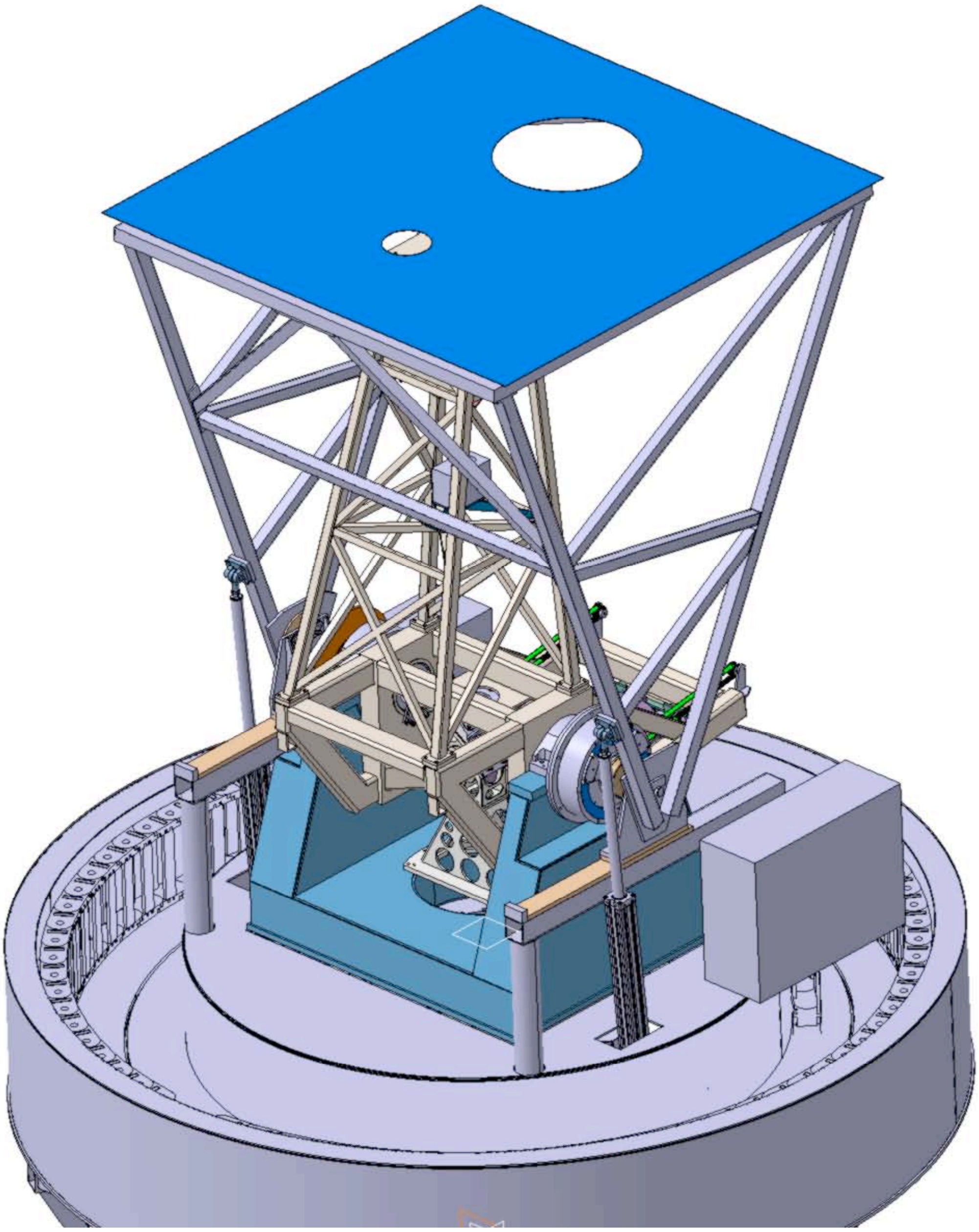

Upper Sunshield

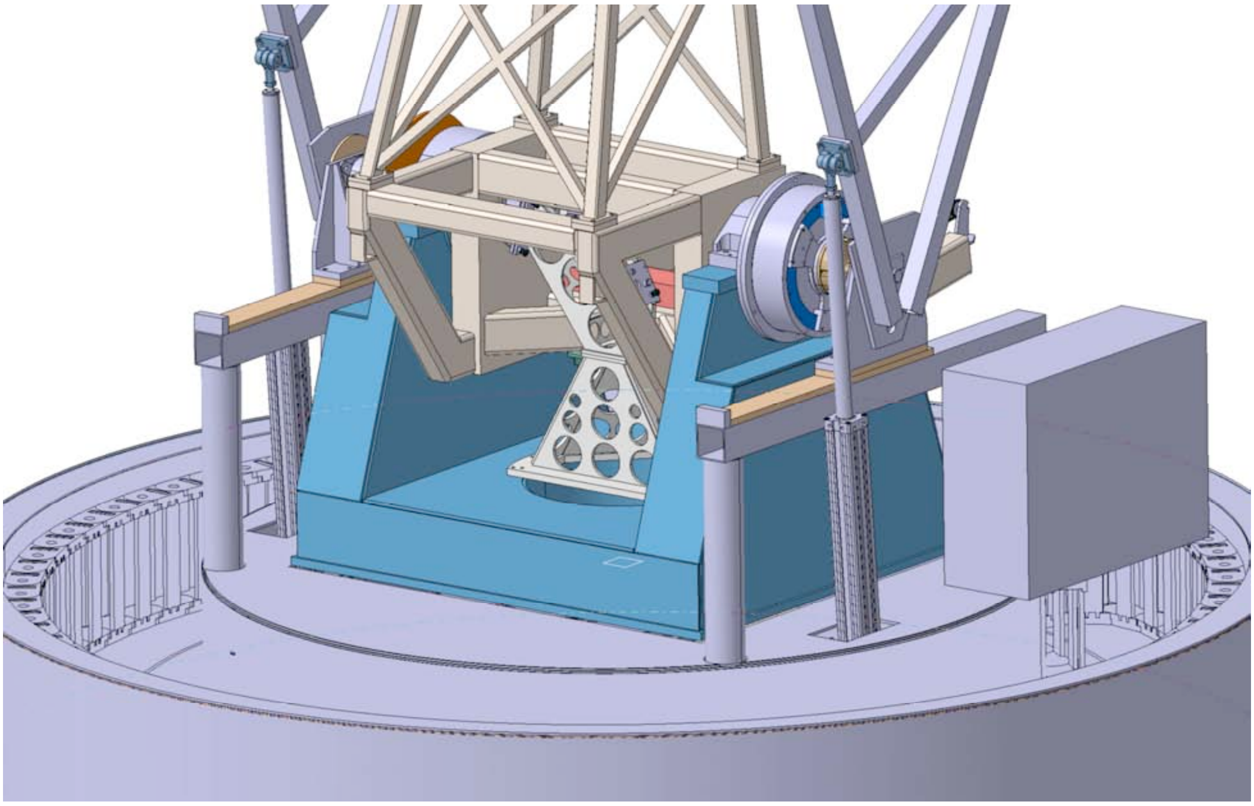

Actuators of the upper sunshield

7.10 CABINETS & SERVICES RELATED TO THE TELESCOPE

These cabinets will be placed on the Azimuth cable wrap.

8. IMPLANTATION AND INTERFACES

The telescope is installed on the upper floor of the main existing building on the USO island in Udaipur. It is thus important to define how it will be implemented with respect to the existing site configuration and what appointments have to be taken. Also the interfaces with the site equipment and with specific instruments have to be accounted and defined. This section deals with design aspects regarding the implantation and interfaces of the telescope on-site. It mainly concerns two aspects:

- the telescope with its auxiliary equipment;
- the polarimeter package (out of AMOS scope) to take place between M2 and M3.

8.1 TELESCOPE AND AUXILIARY EQUIPMENT

The interface of the telescope with the building is defined in [DWG02], as well as the expected appointments to be done on the building.

8.2 POLARIMETER PACKAGE

See §5.1.

Polarimeter on the tube structure

S.A. AMOS
ADVANCED MECHANICAL AND OPTICAL SYSTEMS

LLOYD'S REGISTER QUALITY ASSURANCE ISO9001
UKAS QUALITY MANAGEMENT 001

MULTI-APPLICATION SOLAR TELESCOPE

PRELIMINARY THERMAL DESIGN REPORT

[CONTRACT NO: PRUS20060004600101 FE]

Doc. nr :	AMOS/1967/30/03
Issue :	1.A
Date :	13/07/07

	NAME	DATE	SIGNATURE
Prepared by	Pierre COUCKE Pierre JAMOTTON	13/07/07	
Checked by	Christophe DELREZ	13/07/07	
Released by	Stefan DENIS	13/07/07	

DISTRIBUTION LIST

Name	Company	Quantity
Archives	AMOS	original
Stefan DENIS	AMOS	1 copy
Prof. P. VENKATAKRISHNAN	PRL/USO	1 copy

CHANGE RECORD

ISSUE	DATE	NB OF PAGES	MODIFIED PAGES	REMARKS
1.0	13/07/07	34	initial issue	

TABLE OF CONTENTS

1. APPLICABLE & REFERENCE DOCUMENTS

Applicable and reference documents are defined here below. This includes documents and drawings.

1.1 APPLICABLE DOCUMENTS

ITEM	*TITLE*	*REFERENCE*	*ISSUE*	*DATE*
AD01	*Tender Specification [PRL/04/05-06]*	*1967/03/01*	-	*22/12/05*
AD02	*User Requirements*	*1967/03/02*	-	-
AD03	*MAST Technical Proposal (AMOS)*	*D1660/technical*	*2.0*	*19/05/06*
AD04	*Compliance Matrix (revised)*	-	-	*01/06/06*

1.2 REFERENCE DOCUMENTS

ITEM	*TITLE*	*REFERENCE*	*ISSUE*	*DATE*
RD01	*Preliminary Optical Design Report*	*1967/30/01*	*1.A*	*13/07/07*
RD02	*Preliminary Mechanical Design Report*	*1967/30/02*	*1.A*	*13/07/07*
RD03	*Preliminary Thermal Design Report*	*1967/30/03*	*1.A*	*13/07/07*
RD04	*Preliminary Electrical Design Report*	*1967/30/04*	*1.A*	*13/07/07*
RD05	*Compliance Matrix (PDR issue)*	*1967/30/05*	*1.A*	*13/07/07*
RD06	*Preliminary TCS Design Report [OSL]*	*1967/30/06*	*1.A*	*13/07/07*
RD07	*Main Performance Analyses & Error Budgets*	*1967/01/10*	*1.A*	*13/07/07*

1.3 REFERENCE DRAWINGS

ITEM	*TITLE*	*REFERENCE*	*ISSUE*	*DATE*
DWG01	*General View*	*1967-00-00-00*	*A*	*13/07/07*
DWG02	*Building Interfaces*	*1967-00-00-90*	*A*	*13/07/07*
DWG03	*Polarimeter Interfaces*	*1967-10-00-90*	*A*	*13/07/07*
DWG04	*Tube General Assembly*	*1967-10-00-00*	*A*	*13/07/07*
DWG05	*Fork General Assembly*	*1967-20-00-00*	*A*	*13/07/07*
DWG06	*Ground Interface General Assembly*	*1967-30-00-00*	*A*	*13/07/07*

2. ACRONYMS

ACE	:	Air-Conditioned Environment
AD	:	Applicable Document
Alt.	:	Altitude (axis)
Alt-Az.	:	Altitude-Azimuth (mount)
AMOS	:	Advanced Mechanical & Optical Systems
Az.	:	Azimuth (axis)
C	:	Compliant
DDR	:	Detailed Design Review
DWG	:	Drawing
FFOV	:	Full Field Of View
FOV	:	Field Of View
H/W	:	Hardware
HS	:	Heat Stop
I/F	:	Interface(s)
K-O	:	Kick-Off
MAST	:	Multi-Application Solar Telescope
mNC	:	marginally Non-Compliant
N/A	:	Not Applicable
NC	:	Non-Compliant
NFOV	:	Null Field Of View (= centre of the field)
OSL	:	Observatory Science Ltd.
PDR	:	Preliminary Design Review
pNC	:	partially Non-Compliant
PP	:	Polarimeter Package
PRL	:	Physical Research Laboratory (Govt. of India)
PTV	:	Peak-To-Valley
RD	:	Reference Document
RMS	:	Root Mean Square
RSS	:	Root Sum Square
S/W	:	Software
TBA	:	To Be Approved (by PRL/USO)
TBC	:	To Be Confirmed (by AMOS)
TBD	:	To Be Defined (by AMOS or PRL/USO)
TCS	:	Telescope Control System
USO	:	Udaipur Solar Observatory (PRL – Govt. of India)
WFE	:	WaveFront Error
WFS	:	WaveFront Sensor

3. SCOPE

This document forms a part of the description of the preliminary design done by AMOS for the MAST project. It is not intended at providing a thorough description of the telescope's design, but it rather defines the basic concepts, assumptions and interfaces taken into account by AMOS during the preliminary design phase.

Design documents that participate to the description of the MAST preliminary design include optical [RD01], mechanical [RD02], thermal [RD03], and electrical [RD04] preliminary design reports. These design reports can refer to specific reference documents [RDxx] whenever required. Assembly and interface design drawings [DWGxx] provide complementary information to the design description. A TCS preliminary design report [RD06] completes the list of design documents.

This document is part of the MAST PDR data package, and thus participates to the process of freezing the basic concepts, assumptions and interfaces before proceeding to the detailed design. It is important to agree on a frozen status of these design aspects at PDR level in order to avoid schedule and cost impact of design modification during the detailed design phase.

The telescope design is obviously driven by the particular object it is dedicated to observe: the Sun. On the other hand, the specific environmental conditions (especially the temperature range and variations) are also driving parameters for the design. Finally, the telescope preliminary design aims at basically complying with the design requirements expressed by PRL/USO (Alt-Az. mount, off-axis optical configuration, materials requirements for the mirrors, ...).

Whenever relevant, a justification (discussion, analysis, calculation note) of the design choices is provided or referred to (through Reference Documents). This aims at showing the good match of the design with the PRL/USO requirements ([AD01] & [AD02]). Meanwhile, specific Performance Analyses and Error Budgets related to the main MAST requirements are provided in a separate document [RD07], while a Compliance Matrix summarizes the compliance status of the design with respect to the requirements in another separate document [RD05].

This document specifically deals with the thermal part of the MAST preliminary design. It focuses on the heating due to telescope's exposition to the sun and on the thermal control of the telescope with respect to the ambient temperature variation. Both aspects drive the other parts of the design.

4. TELESCOPE DESIGN OVERVIEW

The Multi-Application Solar Telescope (MAST) is a 50 cm diameter class telescope to be installed on the USO island on the lake Fatehsagar in Udaipur, India. It is dedicated to solar observation.

The telescope is designed, manufactured, assembled and installed on-site by AMOS. It will be installed on the upper floor of the main existing building. Some appointments of the existing pier, dome and 2nd floor will be necessary for that purpose. Moreover, some additional equipment will be required on-site for proper operation of the telescope.

An overview of the MAST design outlines 3 categories of design elements that drive the structure of the document:

- the *telescope structure* (§.5), including the tube, fork and ground interface parts;
- the *mirror units* (§.5.2), including the primary mirror, the secondary mirror and the tertiary mirror units, the Coudé optics unit, the field derotator unit, the back-end folding unit, and the wavefront sensor pick-off unit;
- the *auxiliary equipment* (§.7), including a M1 cover and a M1 flushing system, the heat stop, an output pupil stop, a guider telescope, a wavefront sensor, the altitude and azimuth cable-wraps.

The implantation of the telescope in the existing building and the interfaces with the PRL/USO equipment and site also forms an important part of the design (§.10).

All the above mentioned design elements concern several aspects of the design:

- the optical design;
- the mechanical design;
- the thermal design;
- the electrical design.

Each of these design aspects is detailed in a separate document.

Optical Design

The *optical design* (detailed in [RD01]) is based on an off-axis afocal gregorian configuration formed by two confocal off-axis concave parabolas (M1 & M2). The ratio of the focal lengths (f_{M1}/f_{M2}) gives the angular afocal magnification, which is the reverse of the pupil magnification.

A field stop, located at the primary focus, limits the field of view to a diameter of about 6 arcmin. This field stop also and primarily serves as a heat stop (see thermal design). A pupil stop will materialize the output pupil after M2. Both the pupil stop and the field/heat stop are included in the auxiliary items list.

The specification speaks for a one-tenth pupil demagnification, and hence to a 10-times angular magnification. Thus, the collimated output beam presents a one-degree field diameter spread angle that makes the full field beam footprint quickly enlarge.

A set of flat mirrors (M3 to M6) folds the beam several times along the desired path that coincides with the mechanical altitude and azimuth axes: between M3 and M4, and between M5 and M6, respectively.

The last flat folding mirror (M6) folds the beam out of the telescope towards back-end instruments. Beside these flat folding mirrors, the optical design also includes a pick-off system that folds part of the beam towards the wavefront sensor system.

An optical field derotator takes place between M5 and M6, i.e. where the beam coincides with the azimuth axis. It is formed by 3 flat mirrors rotating as a group. The aim of this field derotator is to keep the image stationary at back-end instruments level, while the Alt-Az. mount concept basically makes the image rotate.

A guider telescope and a wavefront sensor complete the optical design aspects for the telescope, as auxiliary equipment.

Optical configuration and interfaces shall be definitely set from the PDR.

Mechanical Design

The *mechanical design* (detailed in [RD02]) is based on the well-known Alt-Az. mount concept. The telescope is then split into 3 main parts or assemblies:

- the ground interface assembly, that interfaces the telescope to the pier, supports the telescope's other main parts through an azimuth bearing, and which structure supports some equipment such as a field derotator, a mirror unit folding the beam to the back-end instruments, and a wavefront sensor unit;
- the fork assembly, which rotates around the azimuth axis, and supports the Coudé optics and the altitude bearing;
- the tube assembly, which rotates around the fork's altitude axis and includes the primary, secondary and tertiary mirrors (M1, M2, M3) units, a heat-stop, and the interface for the polarimeter package.

Most of the auxiliary equipment also concern the mechanical design: a dust protective cover and a front surface flushing system for the primary mirror, the heat stop and the pupil stop, the guider telescope and the wavefront sensor, the azimuth and altitude cable-wraps. All these items have to be implemented in the overall mechanical design.

The mechanical design also takes into account the implantation of the telescope and some auxiliary equipment (e.g. the azimuth cable-wrap) within the existing building, according to some appointments to be defined, as mentioned above. The main appointments are:

- to change the existing pier in order to support and interface with the telescope design (ground interface);
- to change the existing dome for an entirely retractable one (to operate the telescope in open-air conditions), while persistence of a collapsible wind screen with ventilation capabilities still should be considered;
- to add a new floor at ring level of the existing dome, that provides maintenance and engineering access to fork and tube equipments located above it, while thermally isolating the existing 2nd floor (with pier, ground interface and control equipment) from the open-sky upper level (with fork and tube).

Beside the implantation of the telescope in the existing building, a major task of the preliminary mechanical design is to define all interfaces with customer equipment and site, so that these interfaces are definitely set from the PDR.

The mechanical design goal is to provide a good overall stiffness (with first global eigenfrequency higher than 20 Hz), a mechanical stability suitable regarding the specification, and a robust cost effective design. Another goal of the mechanical design is to keep the beam path as short as possible, in order to limit the impact of the angular field spread. The mechanical design is also in charge of ensuring an almost deformation free support of each mirror.

Thermal Design

Thermal design (detailed in this document) aims at controlling the impact of the solar flux on opto-mechanical elements, as well as controlling the temperature of the equipment so that the difference with respect to the ambient temperature is minimum in order to limit seeing degradation. This is done by heating and cooling of the main elements. Thermal design and control is difficult because of large variations of operating temperature and fast temperature variation (especially in the morning hours).

The thermal design mainly concerns the following equipment: telescope structure (shielding), telescope environment (paint/coating of the floor), mirrors M1 to M5 (heating and cooling concept), and obviously the heat stop. The assumption is made that a new floor (to be appointed – see above) thermally isolates the existing 2nd floor from the open-sky upper level exposed to the sun. That way, equipment that is part of the ground interface assembly or that is more generally located on the 2nd floor level (e.g. control equipment) is located in a temperature-controlled (or air-controlled) environment (ACE). This eases by far the thermal control of these items.

Thermal design also concerns the flushing system of the primary mirror and the telescope cable-wraps (or equivalent system) because of the cooling fluids.

Thermal design basic concepts and interfaces shall be set from the PDR.

Electrical Design

The *electrical design* (detailed in [RD04]) includes 3 aspects of the telescope design:

- electrical design itself (regarding power supply, electrical control, wiring, ...);
- mecatronics design (dealing with electro-mechanical equipments and their control);
- software design (mainly for control, thus mainly the Telescope Control Software).

Mecatronics on the MAST project mainly concerns the definition of the motion axes and the choice of equipment that performs each required motion respectful of the telescope's specified requirements. The main motion axes of the telescope are the Alt. and Az. rotation axes. Other motion axes of importance at equipment level include the M2 hexapod motion (to correct for M1-M2 operational misalignment) and the field derotator rotation axis. Further motion axes include possible guider telescope and wavefront sensor needs. The mecatronics part of the electrical design mainly deals with the control loops.

The TCS is sub-contracted to OSL and the TCS preliminary design is described in a separate document [RD06].

The electrical design – properly speaking and beside the mecatronics and software considerations – defines the electrical cabinets, the electronics equipment and the cables required to proper functioning of the control loops.

Electrical interfaces and basic concepts shall be definitely set from the PDR.

5. TELESCOPE STRUCTURE

The telescope structure is divided in 3 main assemblies: the tube, the fork, and the ground interface. This section deals with design aspects regarding those parts.

5.1 UPPER SUNSHIELD

The telescope's structure is thermally protected by a sunshield.

5.1.1 Global Configuration

The tubes, and the fork, are shaded from the sun illumination by an upper sunshield system. This upper sunshield is mounted on the cable wrap rotating system, and is synchronized on the telescope elevation motor.

It is roughly a square flat area, 2.2 [m] side, with a hole to allow the solar beam to reach the M1. The hole in the upper sunshield is about 600 [mm] diameter, to avoid any interference with the sun light. At M1 structure level, an other baffling, the lower sunshield, highly reflective, is installed. This baffle being close to the M1 on its structure can fit exactly the M1 edge.

The upper sunshield is made of a polished copper plate on which is brazed a copper pipe. This pipe is fed with chilled water, in order to take out the sun heat load.

A global overview of the MAST with the sunshield is given in figure 1.

5.1.2 Thermal Design

The heat load coming from the sun, as detailed in § 6.2, is taken at about 1200 [W m^{-2}].

As the total upper sunshield area is about 4.56 [m^2], and as the surface polish is rejecting 90 [%] of the solar beam, the maximum heat load from the sun is about 550 [W].

Around the M1, the lower sunshield, made also of polished plates, is nominally a corona of 600 [mm] outer diameter and 560 [mm] inner diameter. But this latter should be reduced to 500 [mm], which is the useful M1 diameter. This leads to a maximal area of 0.0864 [m^2], and a related heat load of 10.4 [W].

Including the heat load on the piping, the total heat lift required is of the order of 600 [W]. By flowing water with glycol around 1.5 to 2.0 [K] colder than the ambient air, the required volume flow of the coolant is about 6 [l h^{-1}].

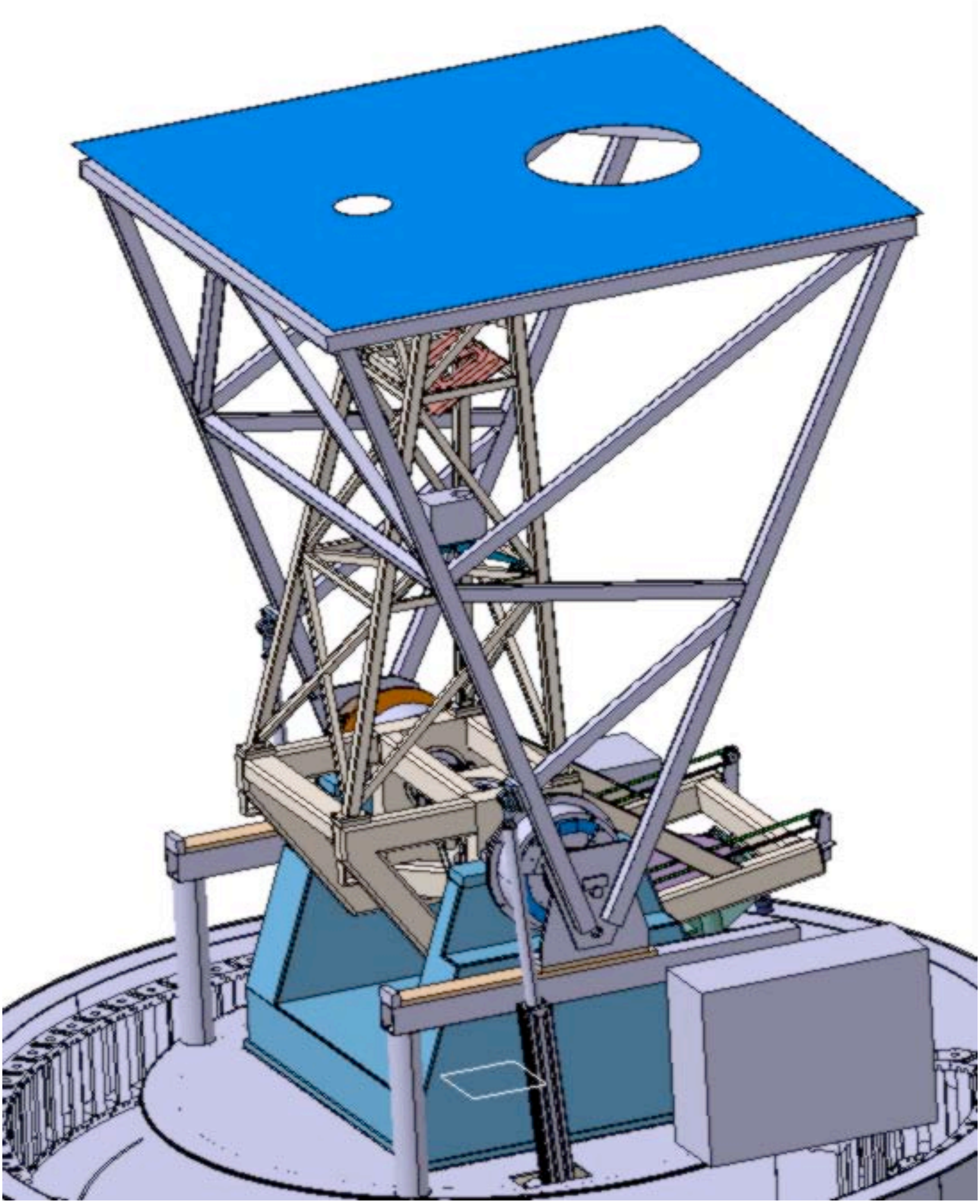

Figure 1 : MAST overview with sunshield

5.2 TUBE

The tube is covered by the upper sunshield. There is no thermal design applicable. It will remains close to ambient temperature by natural convection with ambient air.

5.3 FORK

The fork is covered by the upper sunshield. There is no thermal design applicable. It will remains close to ambient temperature by natural convection with ambient air.

5.4 GROUND INTERFACE

N/A as it is related to lower room air conditioning system.

6. MIRROR UNITS

The telescope includes several mirrors with related equipment (mechanical supporting cells with alignment features, thermal control, protection) taken as units. This section deals with design aspects regarding those mirror units.

In this paragraph is also included the Heat Stop, the Pupil system and the M1 flushing system, as they are closely linked to the optics thermally speaking.

The specification is:

1. M1 active face temperature at ambient temperature +/- 1 [°C].
2. All other active faces temperature at ambient temperature +/- 0.5 [°C].

It must be noted here that having the active surfaces colder than the requirements with regards to ambient temperature should not create any seeing problem.

6.1 GENERAL HYPOTHESIS

The main characteristics of the optics are defined in the following table.

Optics	Useful diameter [mm]	Total diameter [mm]	Mean height [mm]	Mass [kg]	Material
M1	500	560	50	31.16	Zerodur
Heat Stop	61.3	62	10	0.270	Copper
M2	55	55	30	0.283	SiC
Pupil	50	90	5	0.197	Copper
M3		130 - 100	60	0.901	SiC
M4		96	60	0.664	SiC
M5		215 - 110	70	1.593	SiC

And the main characteristics of the different material used are defined in the following table:

Material	Density [kg m^{-3}]	Heat capacity Cp [J kg^{-1} K^{-1}]	Thermal conductivity [W m^{-1} K^{-1}]
Zerodur	2 530	821	1.46
SiC	3 200	680	180
Copper	8 930	385	400
Water with glycol	1 056	3 500	

For the radiative heat fluxes, the following characteristics are taken for optical surfaces:

- the total radiative flux is absorbed by the optical area at the amount of 10 [%]
- but the reflected total flux is up to 95 [%]

This means that, at each reflection, the total amount of energy is increased.

This is coming from the fact that a conservative aspect is taken into account. The total of heat absorbed by the optical surfaces is over-estimated, but in order to have no underestimate of the heat fluxes on the following optics in the optical path, the reflected beam is taken higher.

This approach is not physical, but is mandatory to cover the uncertainties on the optical characteristics of the real optical surfaces, characteristics that are also linked to external factors like dust.

6.2 ENVIRONMENTAL DATA

Environmental data were recorded during one year close to the MAST future location, and were given by the customer.

These data are:

- the ambient air temperature
- the solar radiative flux

They are given for the 365 days, one point per minute.

But for several days, data are corrupted. And the fluctuations are also very important.

A global filtering of the data is then made, and few typical days are taken for the thermal analysis. The temperature to be used for regulation is also taken as a mean value of the last 10 minutes.

For the computations, the typical days are:

- day 2 : winter day, without cloud
- day 3 : winter day with clouds from time to time
- day 227 : summer day, without cloud
- day 228 : summer day with clouds.

Pictures of the data of these days are given in the following pictures, with the instant temperature and the mean one.

All the data of these days are used for M1 thermal computation.

For the other optics computation, the following hypotheses are taken:

- maximum temperature variation : 0.2 [K min^{-1}] = 12 [K h^{-1}]
- maximum solar heat flux : 1200 [W m^{-2}]

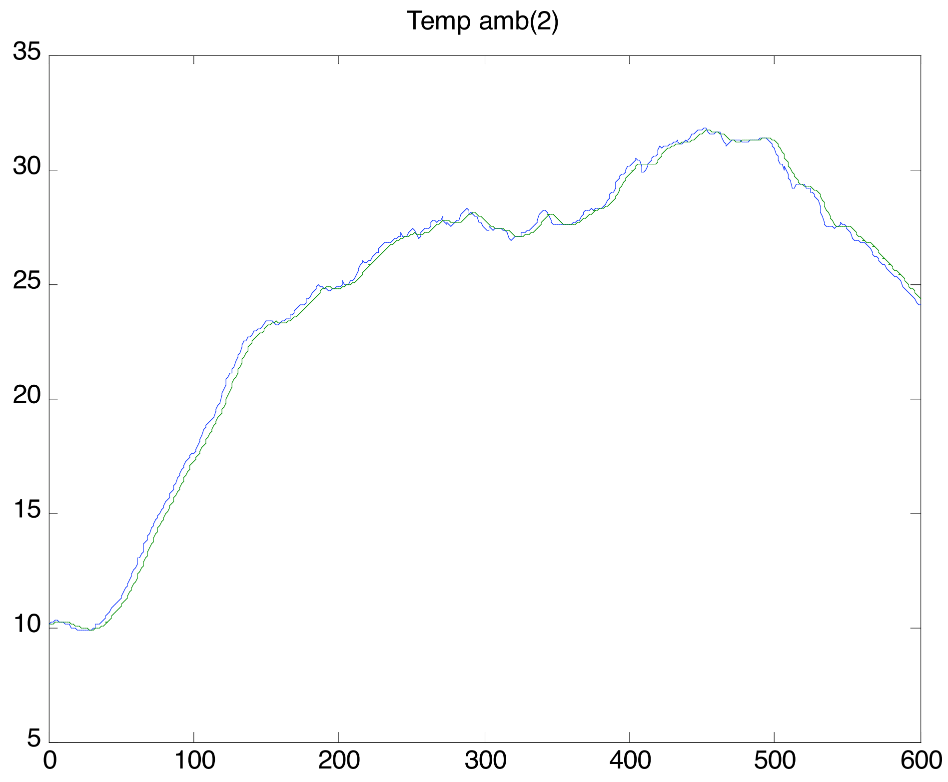
Temp amb(2)
35
30
25
20
15
10
5
0
100
200
300
400
500
600

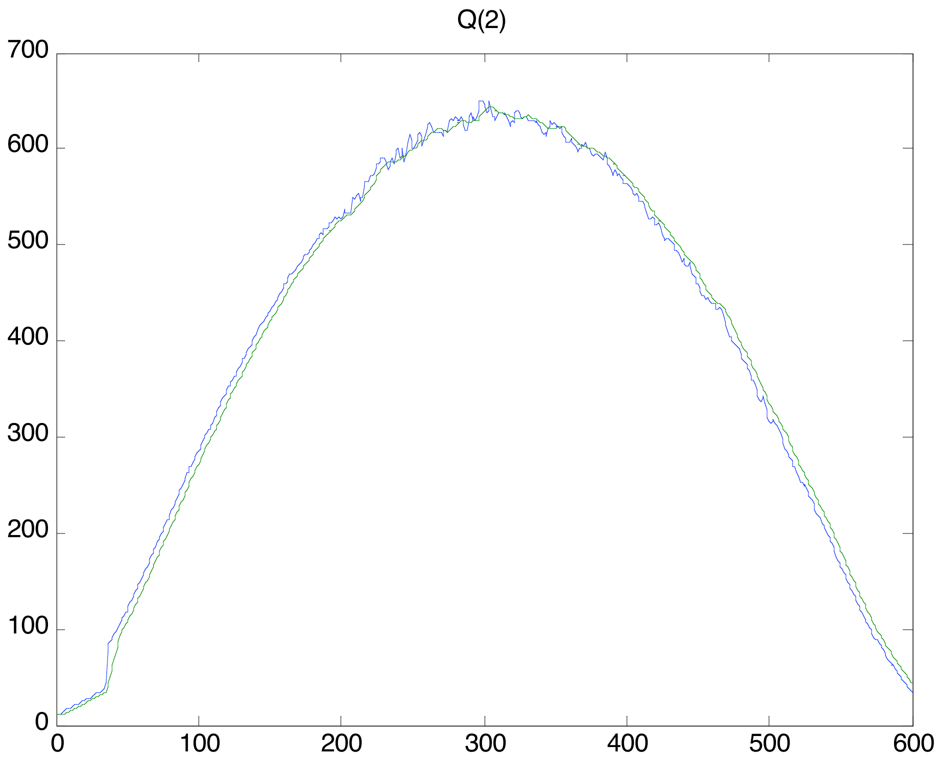
Q(2)
700
600
500
400
300
200
100
0
0
100
200
300
400
500
600

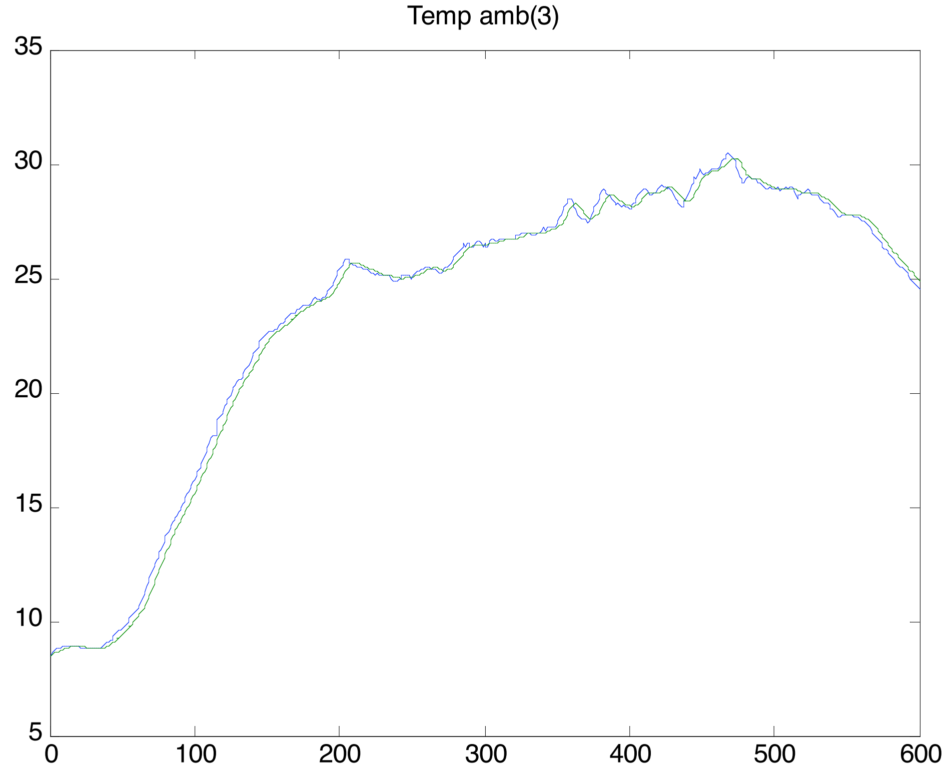
Temp amb(3)
35
30
25
20
15
10
5
0
100
200
300
400
500
600

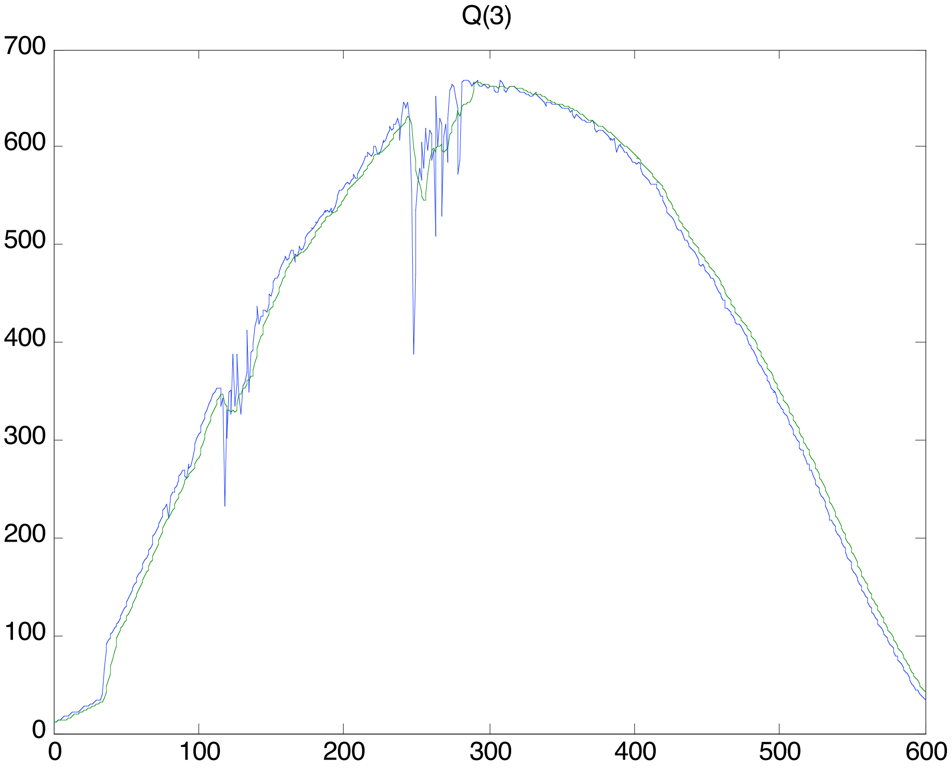
Q(3)
700
600
500
400
300
200
100
0
0
100
200
300
400
500
600

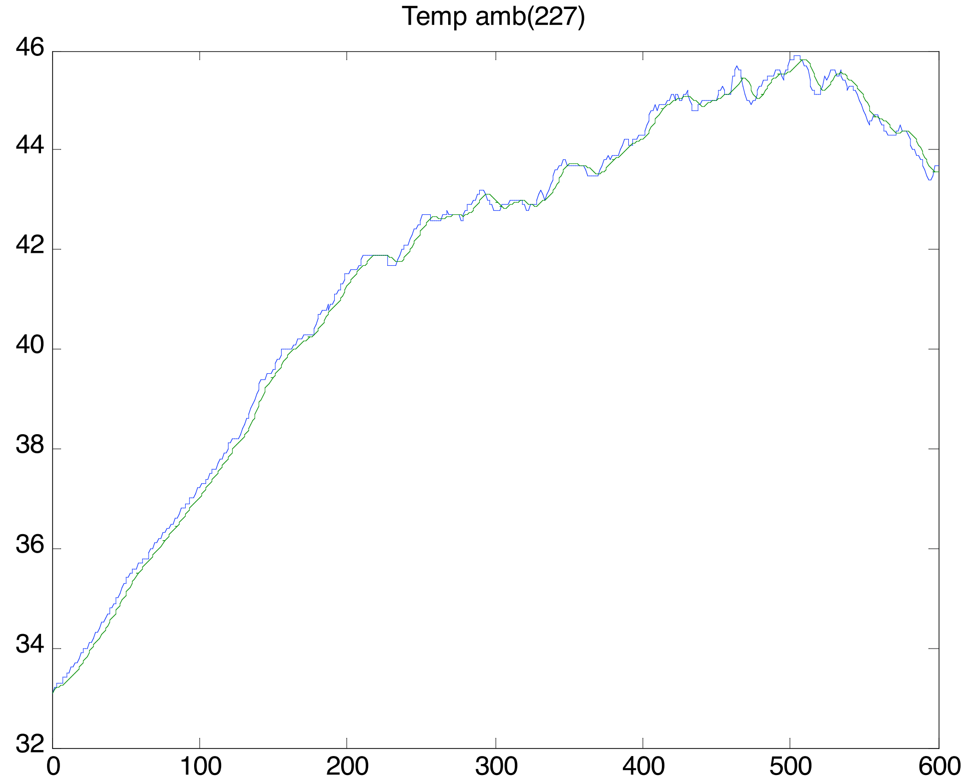
Temp amb(227)
46
44
42
40
38
36
34
32
0
100
200
300
400
500
600

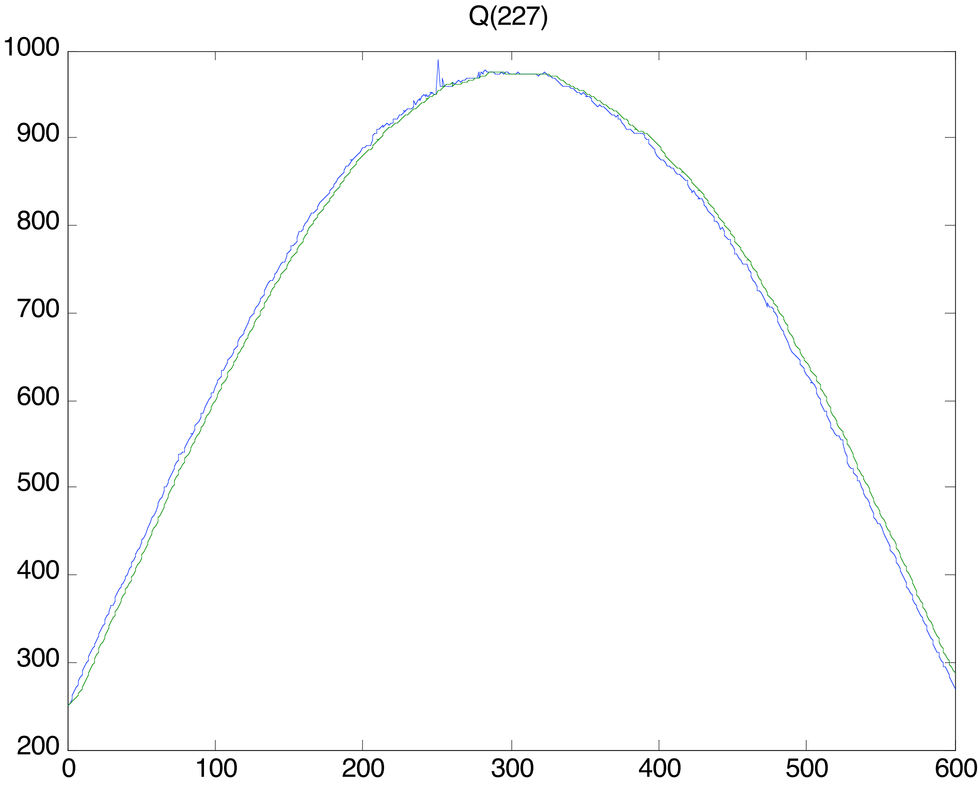
Q(227)
1000
900
800
700
600
500
400
300
200
0
100
200
300
400
500
600

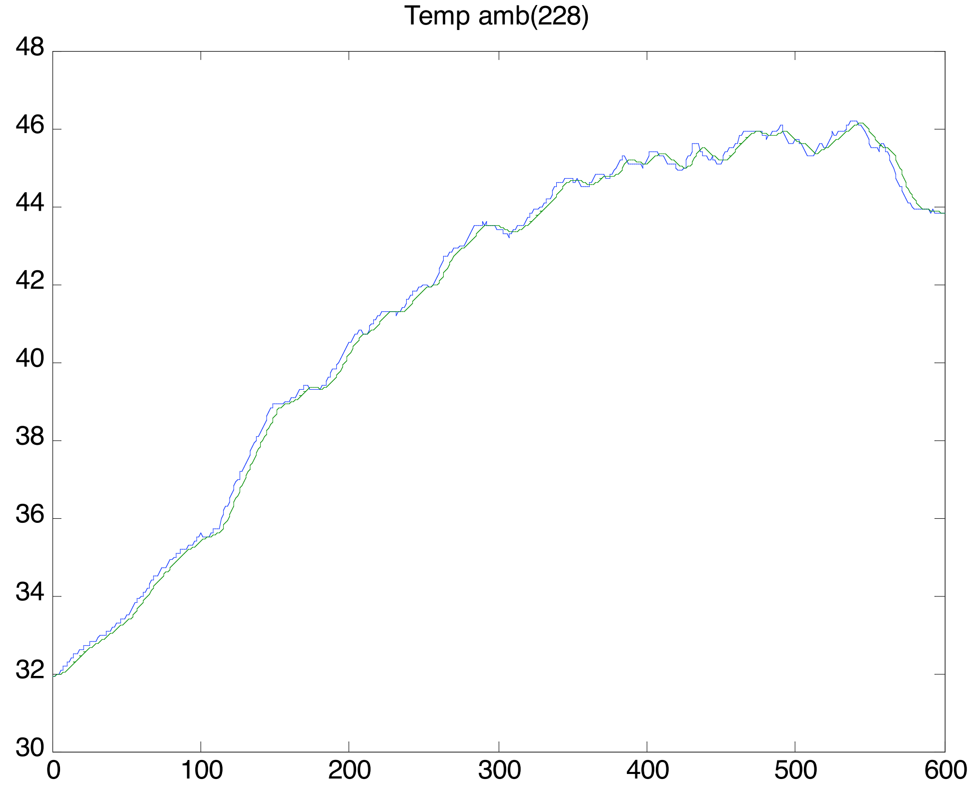
Temp amb(228)
48
46
44
42
40
38
36
34
32
30
0
100
200
300
400
500
600

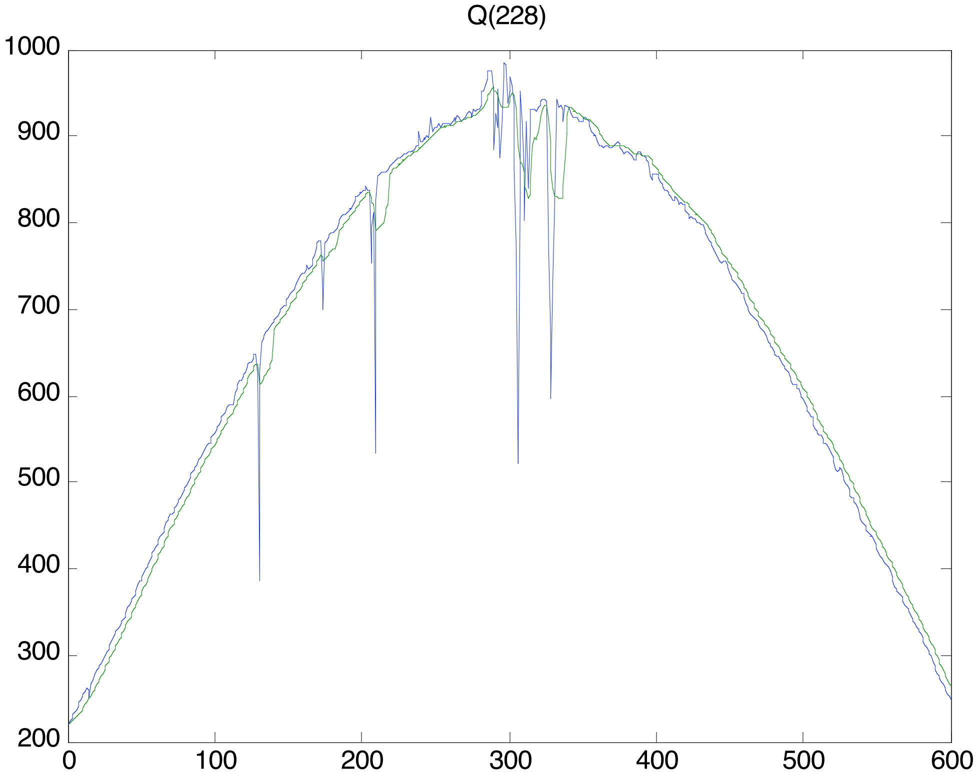
Q(228)
1000
900
800
700
600
500
400
300
200
0
100
200
300
400
500
600

6.3 HEAT FLUXES COMPUTATION

The heat fluxes to deal with are computed as follows:

1. The radiative solar flux enters the telescope, covering the whole area of the M1, i.e. 560 [mm] diameter disk.
2. Part is absorbed, 10 [%], and part is reflected, 95 [%].
3. The remaining flux is intercepted by the heat stop. The nominal field ratio between the hole in the heat stop and the total flux is 1 / 28.45, the angles ratio. For adjustment reason, the heat stop hole is larger than the nominal hole, in the ratio $(4.0 / 3.5)^2$. The flux blocked by the heat stop is partly absorbed, 10 [%], and the remaining 90 [%] are reflected at more than 1.5 [m] from the side of the M1 structure. There is no need to take the conservative value of 95 [%] for this reflection. The flux transmitted to the rest of the telescope is then the flux passing through the central hole of the heat stop.
4. This flux is reflected by the M2. Part is absorbed, 10 [%], and part is reflected, 95 [%].
5. The reflected flux is passing through the pupil. Part is passing through, while part is stopped and is entering the pupil, as far as to avoid stray light, it is black painted, no flux is reflected.
6. The flux passing through the pupil is reflected by the M3. Part is absorbed, 10 [%], and part is reflected, 95 [%].
7. This flux is reflected by the M4. Part is absorbed, 10 [%], and part is reflected, 95 [%].
8. This flux is reflected by the M5. Part is absorbed, 10 [%], and part is reflected, 95 [%], entering the detector.
9. The temperature rate of change to take into account, for capacitive heat load of each optic, is 0.2 [K min-1] = 1/300 [K s^{-1}].

The radiative and capacitive heat fluxes, expressed in Watt, can be summarised in the following table:

Item	Reaching Flux	Absorbed Flux	Reflected Flux to external location	Transmitted Flux to rest of telescope	Capacitive heat flux	Total heat flux
M1	295.6	29.6	0	280.8	85.3	114.9
Heat Stop	280.8	26.8	241.1	12.9	0.34	27.14
M2	12.9	1.3	0	12.2	0.64	1.94
Pupil	12.2	2.47	0	9.73	0.26	2.73
M3	9.73	0.97	0	9.24	2.04	3.01
M4	9.24	0.92	0	8.78	1.50	2.42
M5	8.78	0.88	0	8.34	3.61	4.49

The thermal design and control of the different units are analysed here under.

6.4 M1 UNIT

6.4.1 M1 control principle

The total heat flux to manage is of the order of maximum 115 [W].

The M1 mirror is thermally controlled by mean of 2 airflows with controlled temperature:

- 1 airflow, max speed 1.5 [m s^{-1}], temperature +/- 1 [K] with regards to ambient measured temperature, flushing the front face of the M1 mirror. This airflow is flushing the overall front face, from one half perimeter, in a laminar and linear way. Air from this source is not recycled, and will flow freely out of telescope assembly;
- 1 airflow, nominal speed 3.0 [m s^{-1}], temperature +/- 15 [K] with regards to ambient measured temperature, flushing the rear face of the M1 mirror. This airflow is flushing the overall front face, from the external circumference to the mirror centre. This airflow is collected at the mirror centre, and conducted by a rigid pipe out of the telescope assembly.

A scheme of both flows is given in the following figure 2.

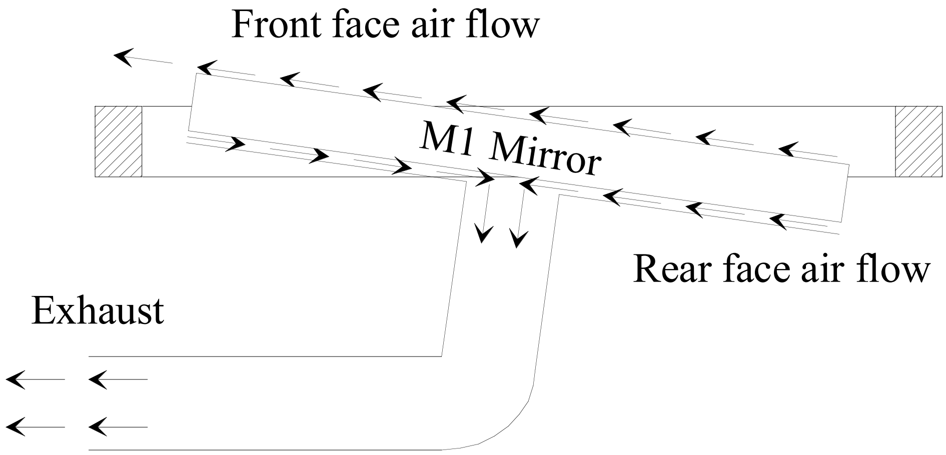

Figure 2: Control Airflows Schematic

Both airflows are controlled by PID loops, with a measurement point at the front face close at about 7.5 [mm] from the outer diameter, not in the active part of the M1.

The front face airflow is free flowing, while the rear face airflow is confined by a plate at 10 [mm] from the rear face. This plate is designed in order to limit the air speed to a maximum of 15 [m s-1], while the collecting central pipe is 58 [mm] internal diameter.

This pipe is bended to conduct the flow out of the telescope zone.

6.4.2 Temperature computation results

The M1 mirror has been modelled by a home made software, in order to predict the temperature distribution within the mirror, and the temperature difference with regards to the ambient air temperature on the mirror front face. This software deals with conductive, convective and radiative heat exchange.

The mirror is modelled by 55 elements in radius and 10 elements in height, leading to a model of 550 elements.

Conduction is computed inside the M1 mirror, forced convection is computed for both airflow, one parallel to front face, one converging to rear face centre. Radiation is coming from solar radiance data.

The temperature distribution in the mirror, along one radius, is given in the following figure. The distribution shown is occurring at time 30 720 seconds, while the maximum gradient occurred at time 30 790 seconds, and is 6.583 [K]. The X = 1 axis represents the active front face, facing downwards, while the rear face is represented by elements at Y = 10. The X axis origin is the outer diameter, while the X = 55 axis is the central elements axis.

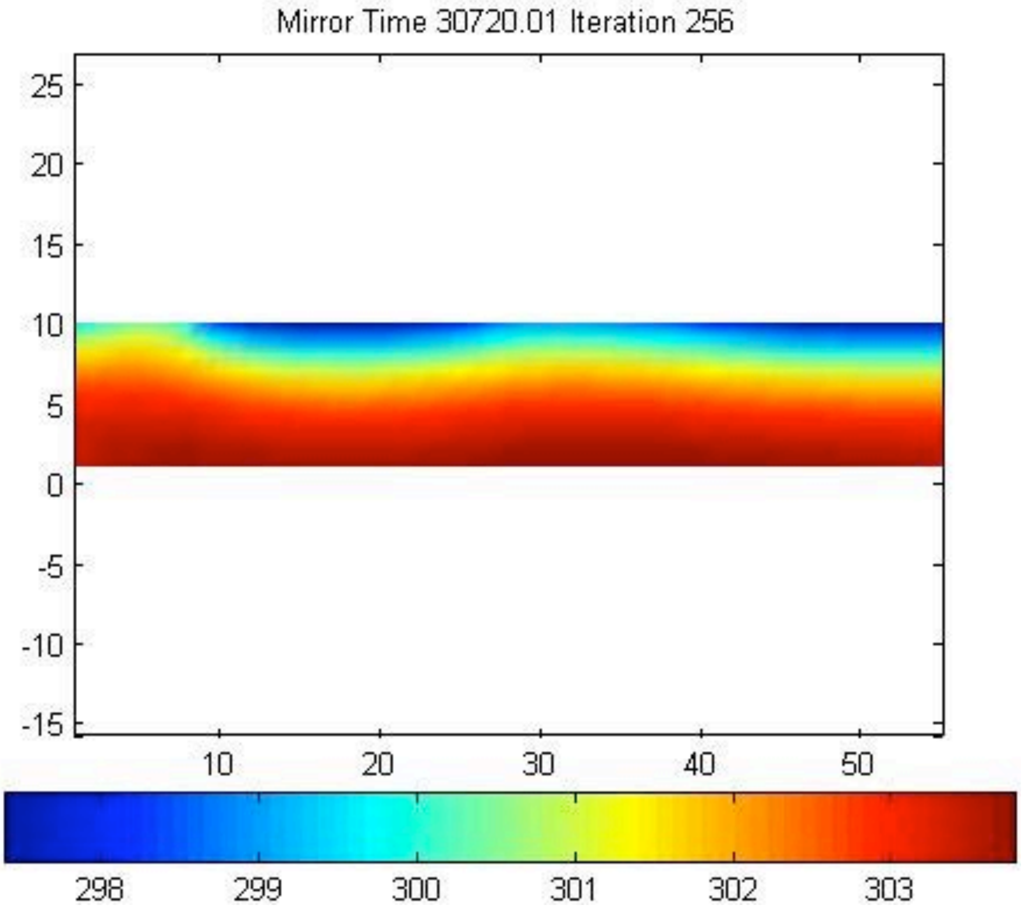

Temperature distribution in a section along a radius, day 2, time 30 720

The following figure shows the temperature difference between mirror front face and ambient air all along the day 2. X axis is time, one point being 2 minutes, meaning that the 300 points represents 600 minutes, i.e. 10 hours. Y axis are the front face elements. The bottom X axis, Y = 1, is the external side of the mirror, while the inner centre is element number 55. Each element is a corona about 5.091 [mm] wide. The colour scale is in Kelvin.

Maximum temperature difference is -0.995 [K] in cold limit and 0.761 [K] in warm limit.

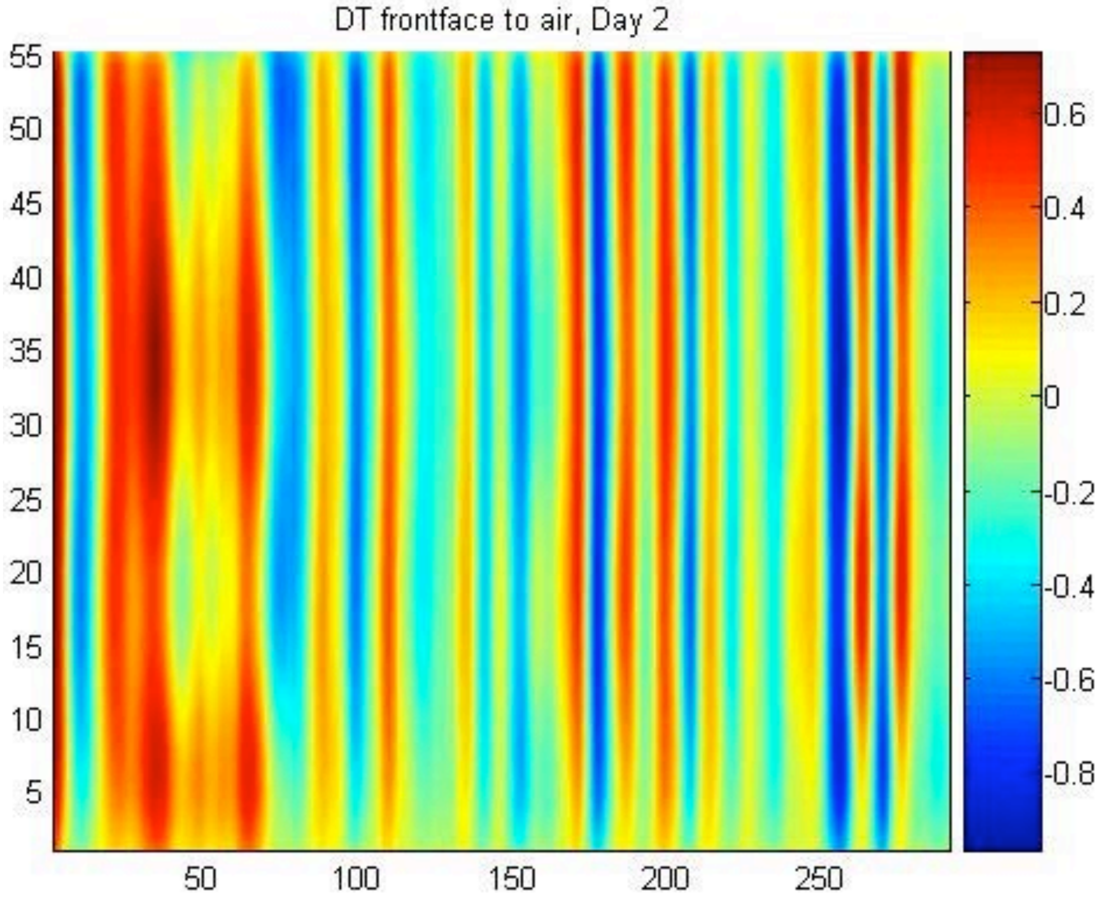

Delta temperature front face - ambient air during day 2

6.4.3 Pressure computation results

The speed is limited in order to avoid M1 deformations due to airflow influence on the pressure distribution.

To force the airflow, it is necessary to have a pressure higher than atmospheric pressure. On the other hand, when the airflows, the dynamic pressure decreases.

Using an air inlet of 3 [m s^{-1}], and by limiting the air speed to 15 [m s^{-1}], the dynamic pressure is ranging from 5.4 to 135 [Pa]. The related mass flow, in a pipe of internal diameter 56 [mm], leads to a pressure drop of 95 [Pa] per pipe meter. As far as one smooth elbow will be used, and as far as the pipe length is about 0.5 [m], it is expected to have an overpressure of few Pascal, limiting the deformation of the mirror within the specifications.

6.4.4 Air regulation

The air system is based on compressed air at room temperature, provided by the customer, and the use of heat exchangers to warm or cool the air to the required temperature.

The estimated total mass flow is nominally 0.075 [kg s^{-1}], with a maximum limit around 0.1 [kg s^{-1}]. These values are equivalent to about 3.75 [m^3 min^{-1}] to 5.0 [m^3 min^{-1}].

Only for thermal purpose of the M1, about 5.0 [m^3 min^{-1}] of compressed air between 6.5 and 7.5 [barg] is required.

The estimated heat lift from the mirror to the airflows is of the order of +/- 120 [W] maximum. But the global cooling / heating requirement is related to the total mass flow and the related temperature difference with ambient, leading to, including the line heat input, a total power of about 1 250 [W].

The compressed airflow is at ambient temperature in the cable wrap for azimuth motion, and the heat exchangers for air temperature settings are moving with it, in order to minimize the length between the M1 mirror and the air conditioner.

Air is injected all around the mirror thanks to a manifold having small holes all around. The pressure reduction from compressed air to ambient pressure air is happening partly in control devices, and partly through the manifold holes.

For contamination purposes, the compressed air should be oil free, dry and filtered. A typical compressor to provide such airflow is, for example: Atlas Copco ZT 37 - 7.5 (oil free screw compressor, 91 [l s^{-1}], pressure 7.5 [barg], input power 37 [kW]). This kind of compressor is given for information, in terms of electrical power and required room. Anyway, compressed air quality must be checked prior any compressor choice.

6.5 HEAT STOP UNIT

6.5.1 Thermal control principle

For all other elements being involved in the solar beam management, the thermal control principle is similar.

The radiative heat load coming from the sun is taken following table given in §6.3. The maximum heat flux and the maximum temperature variation are to be taken as worst case hypotheses.

The thermal control is made by balancing the heat fluxes coming from external world with heat fluxes to a cold sink and from a regulation heater, as described in the following picture.

The cold sink is a thermal plate, cooled down by a flow of chilled water, linked conductively to the item with copper straps. On the item side, a heater and a thermistance are installed to control the item temperature. This system allows a chilled water loop with a relaxed temperature control in terms of precision and dynamic, but ensures a fine and quick thermal control of the items. Such arrangement is shown schematically in figure 3.

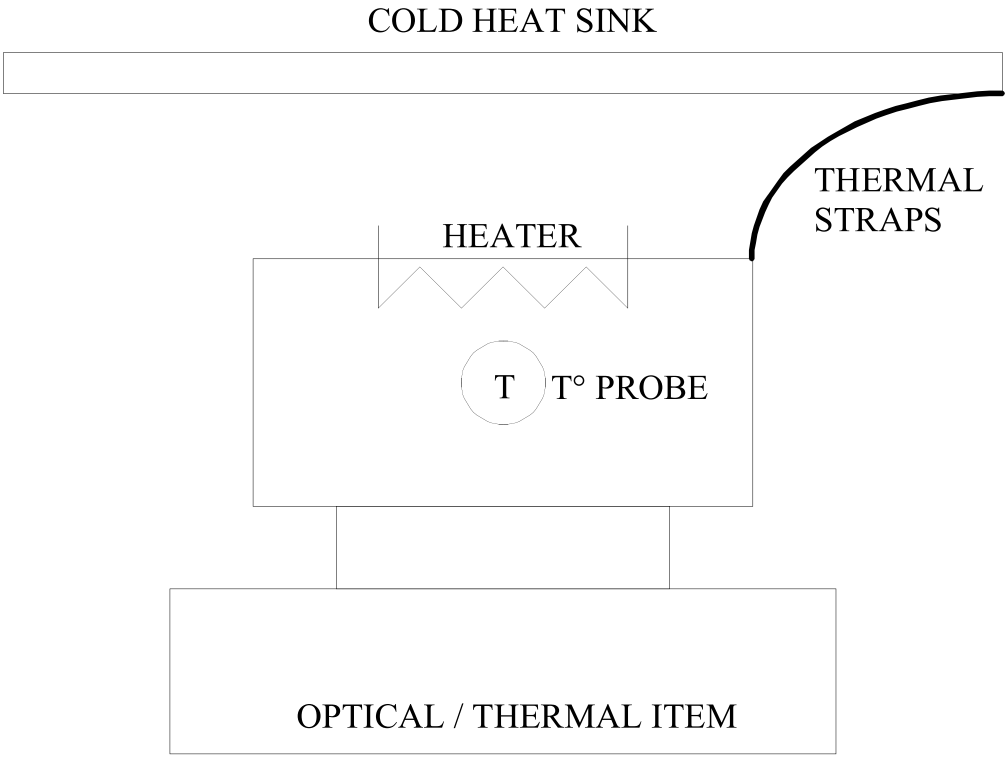

Figure 3: Thermal control schematic

The design of each item is guided by the same rules:

- compute the net heat flow and add a safety margin
- compute the cold heat sink temperature for this item (see § 7.10 dealing with the cooling water loops)
- having the temperature gradient, including the contact resistance, compute the required conductive link to cold heat sink ,
- compute the required heater power

The heat sink cooling loop is supposed to be, at cooler outlet, around 20 [K] colder than ambient temperature, to minimize the thermal straps section, leading to light weight and flexible thermal links.

6.5.2 Heat stop thermal design

The main purpose of the heat stop is to avoid any undesired heat to enter the telescope further on. It cuts all solar flux, except the desired field of view, plus a margin.

Being located at the focal point of the M1, the 6 [arcsec], plus margin, field of view leads to an opening of 4 [mm] diameter.

And to block all solar flux, even when looking at 1.5 solar radius, the total external diameter is 60 [mm], included the margin.

The heat stop is made of a copper plate, 10 [mm] thick, polished and coated with a reflective coating. This leads to a flat mirror, reflecting the incoming light in a diverging beam at 1.5 [m] from the M1 axis, i.e. 1.558 [m] from the azimuth axis, in the direction opposite to the telescope structure. This distance is the minimum distance that can be illuminated, the beam is expanding from this distance outwards.

To ensure this distance, the angle of the heat stop reflective face and the incident beam is about 12.3 [°], leading to an angle with an horizontal plane of about 28.3 [°].

Part of the heat stop is machined, to avoid interference with the solar beam coming from the M2.

The total heat load to deal with is about 27.14 [W]. With the safety margin, the straps are design for a maximum heat lift of 40 [W], and the heaters have a required power of 60 [W].

The required strap section is about 100 [mm^2] for a length of 20 [mm]. As the vibration problem is not critical for the heat stop, it will be directly connected, via copper plates, to the cold heat sink. As the available room is not important at this area, this allows a compact manufacturing with high heat lift. The design results can be summarized in the following table:

ITEM	Heat Load [W]	Straps Cross Section [mm^2]	Straps Length [mm]	Heater Power [W]
Heat Stop	27.2	116	20	60

It must be noted that the heat sink plate of the heat stop is the same used by the pupil, due to proximity.

A picture of the heat stop assembly is given in the following figure 4.

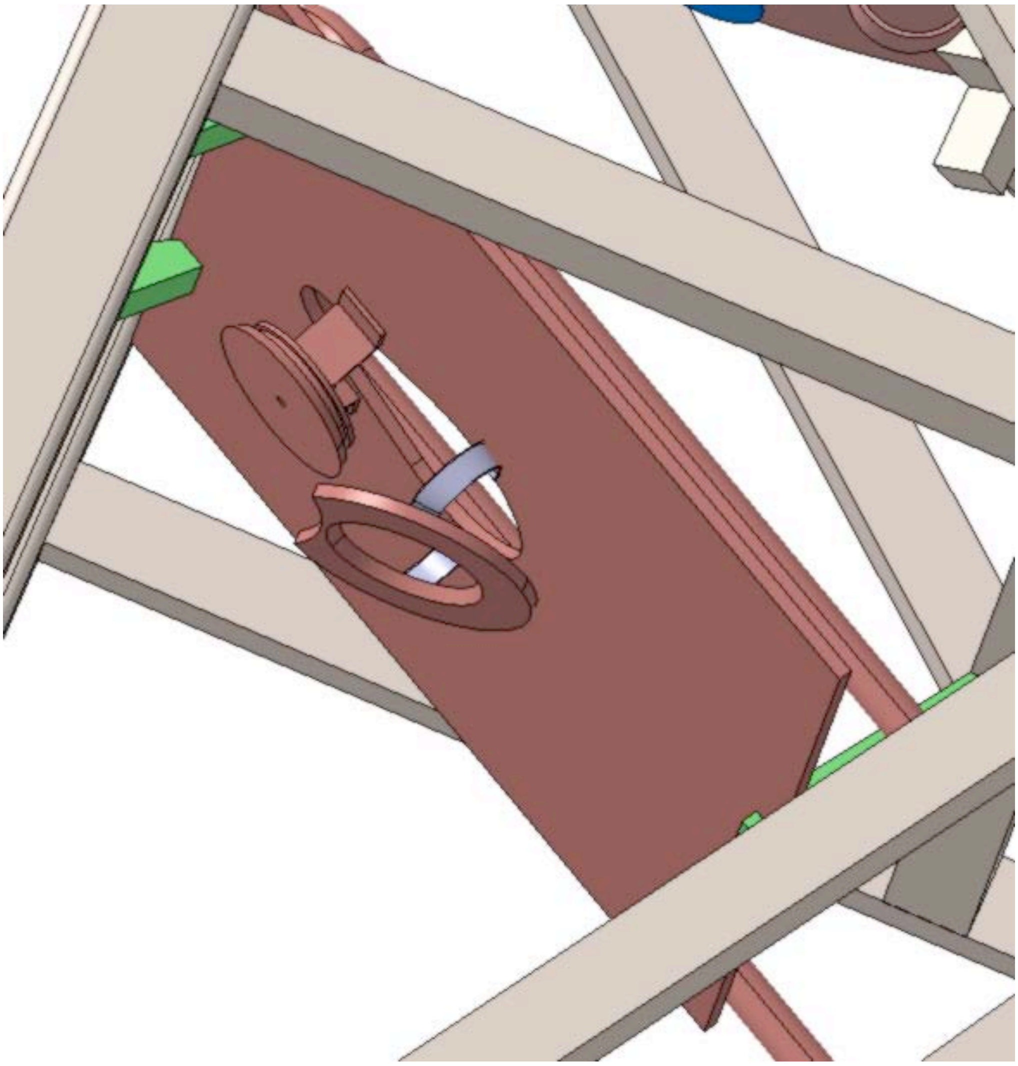

Figure 4: Heat Stop, Pupil and related cold plate assembly

In case of lack of coolant, due to the solar heat input, the heat stop will raise in temperature at the rate of about 21.3 [K min^{-1}]. All items related to the heat stop withstand temperatures of the order of several hundreds of Celsius, meaning that there is at least a delay of 10 to 30 [min] to react, by closing the M1 cover or by moving the telescope.

6.6 M2 UNIT

The control system is similar to the heat stop one.

A picture of the M2 is shown in figure 5.

Heat is coming from the solar beam, passing through the heat stop, and partly absorbed by the M2, and from the required temperature fluctuations on the ambient air.

The Cu-SiC contact conductance for the strapping has been measured in laboratory, and is estimated to be around 0.7 [W K^{-1}].

The design results for the M2 are:

ITEM	Heat Load [W]	Straps Cross Section [mm^2]	Straps Length [mm]	Heater Power [W]
M2	1.94	52.5	110	4.5

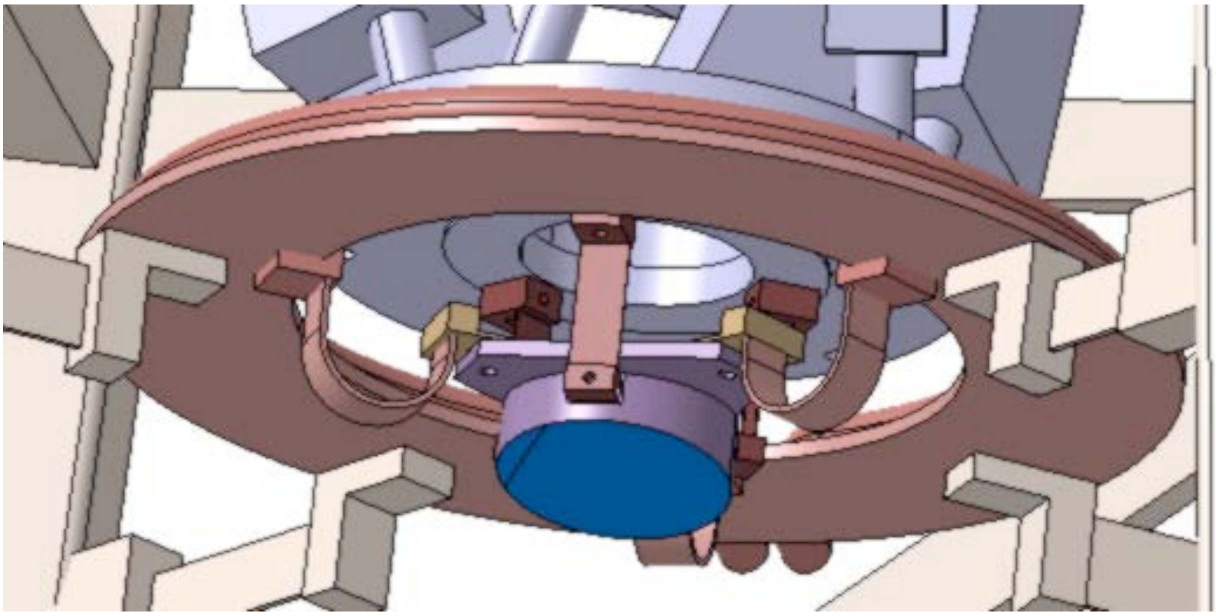

Figure 5: M2 thermal assembly

6.7 OUTPUT PUPIL STOP UNIT

The control system is similar to the heat stop one.

The solar heat flux reaching the pupil stop is the part of the beam that has to be cut by the pupil. The flux passing through the pupil is the ratio of the total area to the useful area, i.e. the ratio $(50/56)^2 = 79.7$ [%]. The 20.3 [%] are loading the pupil stop. Adding to this heat load the capacitive heat load, the total heat input is about 2.73 [W]. And the design results for the pupil stop are:

ITEM	Heat Load [W]	Straps Cross Section [mm^2]	Straps Length [mm]	Heater Power [W]
Pupil	2.73	52.5	88	6.2

The pupil stop is a copper corona, 5 [mm] thick, with a internal diameter of 50 [mm] and an outer diameter of 90 [mm]. Part of the corona is cut, to avoid interference with the solar beam coming from the M1 to the M2.

The pupil stop is thermally linked to the cold heat sink of the heat stop, as these all three items are very close one to the other.

6.8 M3 UNIT

As for previous items, the design results for the M3 are:

ITEM	Heat Load [W]	Straps Cross Section [mm^2]	Straps Length [mm]	Heater Power [W]
M3	3.01	70	92	7.0

6.9 COUDÉ UNIT (M4-M5)

Following the same logic, the design results for the M4 - M5 are:

ITEM	Heat Load [W]	Straps Cross Section [mm^2]	Straps Length [mm]	Heater Power [W]
M4	2.42	75	104	6.0
M5	4.49	140	120	10.5

6.10 FIELD DEROTATOR UNIT

As far as these optics are in a thermally controlled room, it is expected that there are no thermal fluctuations.

6.11 BACK-END FOLDING UNIT (M6)

As far as these optics are in a thermally controlled room, it is expected that there are no thermal fluctuations.

6.12 WFS PICK-OFF UNIT

As far as these optics are in a thermally controlled room, it is expected that there are no thermal fluctuations.

7. AUXILIARY ITEMS

Beside the telescope main structure and the mirror units, some auxiliary equipment is required, that takes place on the telescope or in the close vicinity of the telescope. This section deals with the design aspects regarding those auxiliary items.

7.1 M1 COVER

The M1 cover is to be unfold over the mirror when the telescope is not in observation mode, or in case of emergency, to prevent overheating of the Heat Stop if the cooling system fails.

It will reach an equilibrium temperature as any surface exposed to the sun, like roof plates for example.

As this occurs during non operating periods, there is not thermal design required for this item.

7.2 M1 FLUSHING

Please refer to § 6.4.

7.3 HEAT STOP

Please refer to § 6.5.

7.4 OUTPUT PUPIL STOP

Please refer to § 6.7.

7.5 COOLING WATER LOOPS

4 water loops are used for cooling purpose of the telescope system:

#	**Unit controlled**
1	M1 (air conditioning)
2	Heat Stop - M2 - Pupil - M3 - M4 - M5
3	Upper sunshield and M1 lower shield
4	Motors and electrical cabinets

All pipes and cold plates are insulated either with flexible pipe insulation (ARMAFLEX - ARMSTRONG for example) or with Polyurethane foam.

The main characteristics to deal with for these loops are:

#	**Total Length [m]**	**Heat lift [W]**	**Minimum T [°C]**	**Nominal Flow [l min^{-1}]**
1	30	1 250	- 10 (Tamb - 20.0)	4.1
2	35	340	- 10 (Tamb - 20.0)	1.2
3	40	600	8.25 (Tamb - 1.75)	6.0
4	24	1 480	5 (Tamb - 5.0)	4.8

All four loops are passing into the azimuth cable wrap, while only the loop #2 is passing in the elevation cable wrap.

It is intended to have 3 separate chillers for these loops:

- 1 with a heat lift of about 1600 to 2000 [W] working 20 [K] below ambient temperature
- 1 with a heat lift of about to 600 to 750 [W] working 1.75 [K] below ambient temperature.
- 1 with a heat lift of about to 1500 to 1750 [W] working 5 [K] below ambient temperature.

Or, as a possible alternate solution, to have only 2 separate chillers for these loops:

- 1 with a heat lift of about 1600 to 2000 [W] working 20 [K] below ambient temperature
- 1 with a heat lift of about to 2000 to 2200 [W] working 5 [K] below ambient temperature.

Achieving the sunshield loop about 1.75 [K] below ambient temperature is done by bypassing the chiller for part of the water flow.

8. IMPLANTATION AND INTERFACES

The telescope is installed on the upper floor of the main existing building on the USO island in Udaipur. It is thus important to define how it will be implemented with respect to the existing site configuration and what appointments have to be taken. Also the interfaces with the site equipment and with specific instruments have to be accounted and defined. This section deals with design aspects regarding the implantation and interfaces of the telescope on-site. It mainly concerns two aspects:

- the telescope with its auxiliary equipment;
- the polarimeter package (out of AMOS scope) to take place between M2 and M3.

8.1 TELESCOPE AND AUXILIARY EQUIPMENT

8.1.1 Thermal Control Equipment Air needs

Oil free dry compressed air requirements:

ITEM	Estimated need	Requirement
M1 thermal control airflow rate	3.75 [m^3 min^{-1}]	5.0 [m^3 min^{-1}]
M1 air pressure	6.5 [barg]	7.5 [barg]
M1 air class (ISO 8573-1 (2001) maximum oil content	class 1 < 0.01 [ppm]	class 1 < 0.01 [ppm]
M1 air dew point at 7.5 [barg]	- 20 [°C]	-30 [°C]
M1 air particle filter	5.0 [μm]	5.0 [μm]

8.1.2 Motors and Control Cabinets thermal control electrical needs

The electrical items presented here are only related to thermal control. Electrical needs like motors and computers are not taken into account in the following table.

Electrical power requirements:

ITEM	Estimated need	Requirement
M1 air compressor (out of AMOS scope of supply)	37 000 [W]	50 000 [W]
M1 thermal control	1 250 [W]	1 500 [W]
Heat Stop - M2 - Pupil - M3 to M5 cooling	94 [W]	120 [W]
Water cooler for M1 and Heat Stop to M5	4 000 [W]	5 000 [W]
Water cooler for sunshield	600 [W]	750 [W]
Water cooler for electrical cabinets and motors	3 275 [W]	4 000 [W]
TOTAL ELECTRICAL POWER	**46.2 [kW]**	**61.4 [kW]**

It must be noted here that the compressed air supply is not in the AMOS scope of supply. A specification for the air mass flow rate, pressure and cleanliness is given. But for information only, a typical compressor has been indicated to give an order of magnitude of the required global electrical power need.

It must be noted also that, for safety reason, it is strongly recommended to have the Heat Stop to M5 cooling loop on UPS. Thus, 5 000 [W] may be required. In order to reduce the UPS size, it is possible to use 2 separate chillers. One is not on the UPS system, for the M1 loop, using 4 000 [W] and the other, for the Heat Stop to M5 cooling loop, using 1 000 [W] has to be put on the UPS. The financial aspects related to this solution will be discussed by the project manager.

8.2 POLARIMETER PACKAGE

N/A

S.A. AMOS
ADVANCED MECHANICAL AND OPTICAL SYSTEMS

MULTI-APPLICATION SOLAR TELESCOPE

PRELIMINARY ELECTRICAL DESIGN REPORT

[CONTRACT NO: PRUS20060004600101 FE]

Doc. nr : AMOS/1967/30/04
Issue : 1.A
Date : 13/07/07

	NAME	DATE	SIGNATURE
Prepared by	Eric GABRIEL	13/07/07	
Checked by	Christophe DELREZ	13/07/07	
Released by	Stefan DENIS	13/07/07	

DISTRIBUTION LIST

Name	Company	Quantity
Archives	AMOS	original
Stefan DENIS	AMOS	1 copy
Prof. P. VENKATAKRISHNAN	PRL/USO	1 copy

CHANGE RECORD

ISSUE	DATE	NB OF PAGES	MODIFIED PAGES	REMARKS
1.0	13/07/07	28	initial issue	

TABLE OF CONTENTS

1. APPLICABLE & REFERENCE DOCUMENTS

Applicable and reference documents are defined here below. This includes documents and drawings.

1.1 APPLICABLE DOCUMENTS

ITEM	*TITLE*	*REFERENCE*	*ISSUE*	*DATE*
AD01	*Tender Specification [PRL/04/05-06]*	*1967/03/01*	*-*	*22/12/05*
AD02	*User Requirements*	*1967/03/02*	*-*	*-*
AD03	*MAST Technical Proposal (AMOS)*	*D1660/technical*	*2.0*	*19/05/06*
AD04	*Compliance Matrix (revised)*	*-*	*-*	*01/06/06*

1.2 REFERENCE DOCUMENTS

ITEM	*TITLE*	*REFERENCE*	*ISSUE*	*DATE*
RD01	*Preliminary Optical Design Report*	*1967/30/01*	*1.A*	*13/07/07*
RD02	*Preliminary Mechanical Design Report*	*1967/30/02*	*1.A*	*13/07/07*
RD03	*Preliminary Thermal Design Report*	*1967/30/03*	*1.A*	*13/07/07*
RD04	*Preliminary Electrical Design Report*	*1967/30/04*	*1.A*	*13/07/07*
RD05	*Compliance Matrix (PDR issue)*	*1967/30/05*	*1.A*	*13/07/07*
RD06	*Preliminary TCS Design Report [OSL]*	*1967/30/06*	*1.A*	*13/07/07*
RD07	*Main Performance Analyses & Error Budgets*	*1967/01/10*	*1.A*	*13/07/07*
RD08	*Loop Configuration*	*1967/29/03*	*1.A*	*10/07/07*
RD09	*Bill Of Material*	*1967/29/02*	*1.A*	*10/07/07*
RD10	*Altitude & Azimuth motorisation calculation note*	*1967/01/01*	*1.D*	*11/07/07*
RD11	*Position Range Diagram*	*1967/29/05*	*1.A*	*10/07/07*
RD12	*Cable Wrap Description*	*1967/29/14*	*1.A*	*09/07/07*
RD13	*Control System Bloc Diagram*	*1967/29/01*	*1.A*	*09/07/07*
RD14	*Upper Sun Shield motorisation calculation note*	*1967/01/12*	*1.A*	*10/07/07*

1.3 REFERENCE DRAWINGS

ITEM	*TITLE*	*REFERENCE*	*ISSUE*	*DATE*
DWG01	*General View*	*1967-00-00-00*	*A*	*13/07/07*
DWG02	*Building Interfaces*	*1967-00-00-90*	*A*	*13/07/07*
DWG03	*Polarimeter Interfaces*	*1967-10-00-90*	*A*	*13/07/07*
DWG04	*Tube General Assembly*	*1967-10-00-00*	*A*	*13/07/07*
DWG05	*Fork General Assembly*	*1967-20-00-00*	*A*	*13/07/07*
DWG06	*Ground Interface General Assembly*	*1967-30-00-00*	*A*	*13/07/07*

2. ACRONYMS

AD : Applicable Document
AIV : Assembly – Integration - Verification
Alt. : Altitude (axis)
Alt-Az. : Altitude-Azimuth (mount)
AMOS : Advanced Mechanical & Optical Systems
Az. : Azimuth (axis)
C : Compliant
DDR : Detailed Design Review
DWG : Drawing
FFOV : Full Field Of View
FOV : Field Of View
GIS : Ground Interface Structure
H/W : Hardware
HS : Heat Stop
I/F : Interface(s)
I/O(s) : Input(s)/Output(s)
K-O : Kick-Off
MAST : Multi-Application Solar Telescope
MCS : Mount Control System
MNC : marginally Non-Compliant
N/A : Not Applicable
NC : Non-Compliant
NFOV : Null Field Of View (= centre of the field)
OSL : Observatory Science Ltd.
PDR : Preliminary Design Review
PI : Physik Instrumente
PLC : Programmable Logical Controller
PNC : partially Non-Compliant

PP	:	Polarimeter Package
PRL	:	Physical Research Laboratory (Govt. of India)
PTV	:	Peak-To-Valley
RD	:	Reference Document
RMS	:	Root Mean Square
Rpm	:	Rotation Per Minut
S/W	:	Software
TBA	:	To Be Approved (by PRL/USO)
TBC	:	To Be Confirmed (by AMOS)
TBD	:	To Be Defined (by AMOS or PRL/USO)
TCS	:	Telescope Control System
USO	:	Udaipur Solar Observatory (PRL – Govt. of India)
WFE	:	WaveFront Error
WFS	:	WaveFront Sensor

3. SCOPE

This document forms a part of the description of the preliminary design done by AMOS for the MAST project. It is not intended at providing a thorough description of the telescope's design, but it rather defines the basic concepts, assumptions and interfaces taken into account by AMOS during the preliminary design phase.

Design documents that participate to the description of the MAST preliminary design include optical [RD01], mechanical [RD02], thermal [RD03], and electrical [RD04] preliminary design reports. These design reports can refer to specific reference documents [RDxx] whenever required. Assembly and interface design drawings [DWGxx] provide complementary information to the design description. A TCS preliminary design report [RD06] completes the list of design documents.

This document is part of the MAST PDR data package, and thus participates to the process of freezing the basic concepts, assumptions and interfaces before proceeding to the detailed design. It is important to agree on a frozen status of these design aspects at PDR level in order to avoid schedule and cost impact of design modification during the detailed design phase.

The telescope design is obviously driven by the particular object it is dedicated to observe: the Sun. On the other hand, the specific environmental conditions (especially the temperature range and variations) are also driving parameters for the design. Finally, the telescope preliminary design aims at basically complying with the design requirements expressed by PRL/USO (Alt-Az. mount, off-axis optical configuration, materials requirements for the mirrors, ...).

Whenever relevant, a justification (discussion, analysis, calculation note) of the design choices is provided or referred to (through Reference Documents). This aims at showing the good match of the design with the PRL/USO requirements ([AD01] & [AD02]). Meanwhile, specific Performance Analyses and Error Budgets related to the main MAST requirements are provided in a separate document [RD07], while a Compliance Matrix summarizes the compliance status of the design with respect to the requirements in another separate document [RD05].

This document specifically deals with the electrical part of the MAST preliminary design. It focuses on the telescope's mecatronics that drives some important performance of the system. It also deals with the Telescope Control System, as well as with electrical hardware and software aspects regarding the telescope.

4. TELESCOPE DESIGN OVERVIEW

The Multi-Application Solar Telescope (MAST) is a 50 cm diameter class telescope to be installed on the USO island on the lake Fatehsagar in Udaipur, India. It is dedicated to solar observation.

The telescope is designed, manufactured, assembled and installed on-site by AMOS. It will be installed on the upper floor of the main existing building. Some appointments of the existing pier, dome and 2nd floor will be necessary for that purpose. Moreover, some additional equipment will be required on-site for proper operation of the telescope.

An overview of the MAST design outlines 3 categories of design elements that drive the structure of the document:

- the *telescope structure* (§.5), including the tube, fork and ground interface parts;
- the *mirror units* (§.6), including the primary mirror, the secondary mirror and the tertiary mirror units, the Coudé optics unit, the field derotator unit, the back-end folding unit, and the wavefront sensor pick-off unit;
- the *auxiliary equipment* (§.7), including a M1 cover and a M1 flushing system, the heat stop, an output pupil stop, a guider telescope, a wavefront sensor, the altitude and azimuth cable-wraps.

The implantation of the telescope in the existing building and the interfaces with the PRL/USO equipment and site also forms an important part of the design (§.10).

All the above mentioned design elements concern several aspects of the design:

- the optical design;
- the mechanical design;
- the thermal design;
- the electrical design.

Each of these design aspects is detailed in a separate document.

<u>Optical Design</u>

The *optical design* (detailed in [RD01]) is based on an off-axis afocal gregorian configuration formed by two confocal off-axis concave parabolas (M1 & M2). The ratio of the focal lengths (f_{M1}/f_{M2}) gives the angular afocal magnification, which is the reverse of the pupil magnification.

A field stop, located at the primary focus, limits the field of view to a diameter of about 6 arcmin. This field stop also and primarily serves as a heat stop (see thermal design). A pupil stop will materialize the output pupil after M2. Both the pupil stop and the field/heat stop are included in the auxiliary items list.

The specification speaks for a one-tenth pupil demagnification, and hence to a 10-times angular magnification. Thus, the collimated output beam presents a one-degree field diameter spread angle that makes the full field beam footprint quickly enlarge.

A set of flat mirrors (M3 to M6) folds the beam several times along the desired path that coincides with the mechanical altitude and azimuth axes: between M3 and M4, and between M5 and M6, respectively.

The last flat folding mirror (M6) folds the beam out of the telescope towards back-end instruments. Beside these flat folding mirrors, the optical design also includes a pick-off system that folds part of the beam towards the wavefront sensor system.

An optical field derotator takes place between M5 and M6, i.e. where the beam coincides with the azimuth axis. It is formed by 3 flat mirrors rotating as a group. The aim of this field derotator is to keep the image stationary at back-end instruments level, while the Alt-Az. mount concept basically makes the image rotate.

A guider telescope and a wavefront sensor complete the optical design aspects for the telescope, as auxiliary equipment.

Optical configuration and interfaces shall be definitely set from the PDR.

Mechanical Design

The *mechanical design* (detailed in [RD02]) is based on the well-known Alt-Az. mount concept. The telescope is then split into 3 main parts or assemblies:

- the ground interface assembly, that interfaces the telescope to the pier, supports the telescope's other main parts through an azimuth bearing, and which structure supports some equipment such as a field derotator, a mirror unit folding the beam to the back-end instruments, and a wavefront sensor unit;
- the fork assembly, which rotates around the azimuth axis, and supports the Coudé optics and the altitude bearing;
- the tube assembly, which rotates around the fork's altitude axis and includes the primary, secondary and tertiary mirrors (M1, M2, M3) units, a heat-stop, and the interface for the polarimeter package.

Most of the auxiliary equipment also concern the mechanical design: a dust protective cover and a front surface flushing system for the primary mirror, the heat stop and the pupil stop, the guider telescope and the wavefront sensor, the azimuth and altitude cable-wraps. All these items have to be implemented in the overall mechanical design.

The mechanical design also takes into account the implantation of the telescope and some auxiliary equipment (e.g. the azimuth cable-wrap) within the existing building, according to some appointments to be defined, as mentioned above. The main appointments are:

- to change the existing pier in order to support and interface with the telescope design (ground interface);

- to change the existing dome for an entirely retractable one (to operate the telescope in open-air conditions), while persistence of a collapsible wind screen with ventilation capabilities still should be considered;
- to add a new floor at ring level of the existing dome, that provides maintenance and engineering access to fork and tube equipments located above it, while thermally isolating the existing 2nd floor (with pier, ground interface and control equipment) from the open-sky upper level (with fork and tube).

Beside the implantation of the telescope in the existing building, a major task of the preliminary mechanical design is to define all interfaces with customer equipment and site, so that these interfaces are definitely set from the PDR.

The mechanical design goal is to provide a good overall stiffness (with first global eigenfrequency higher than 20 Hz), a mechanical stability suitable regarding the specification, and a robust cost effective design. Another goal of the mechanical design is to keep the beam path as short as possible, in order to limit the impact of the angular field spread. The mechanical design is also in charge of ensuring an almost deformation free support of each mirror.

Thermal Design

The *thermal design* (detailed in [RD03]) aims at controlling the impact of the solar flux on opto-mechanical elements, as well as controlling the temperature of the equipment so that the difference with respect to the ambient temperature is minimum in order to limit seeing degradation. This is done by heating and cooling of the main elements. Thermal design and control is difficult because of large variations of operating temperature and fast temperature variation (especially in the morning hours).

The thermal design mainly concerns the following equipment: telescope structure (shielding), telescope environment (paint/coating of the floor), mirrors M1 to M5 (heating and cooling concept), and obviously the heat stop. The assumption is made that a new floor (to be appointed – see above) thermally isolates the existing 2nd floor from the open-sky upper level exposed to the sun. That way, equipment that is part of the ground interface assembly or that is more generally located on the 2nd floor level (e.g. control equipment) is located in a temperature-controlled (or air-controlled) environment (ACE). This eases by far the thermal control of these items.

Thermal design also concerns the flushing system of the primary mirror and the telescope cable-wraps (or equivalent system) because of the cooling fluids.

Thermal design basic concepts and interfaces shall be set from the PDR.

Electrical Design

Electrical design (detailed in this document) includes 3 aspects of the telescope design:

- electrical design itself (regarding power supply, electrical control, wiring, ...);
- mecatronics design (dealing with electro-mechanical equipments and their control);
- software design (mainly for control, thus mainly the Telescope Control Software).

Mecatronics on the MAST project mainly concerns the definition of the motion axes and the choice of equipment that performs each required motion respectful of the telescope's specified requirements. The main motion axes of the telescope are the Alt. and Az. rotation axes. Other motion axes of importance at equipment level include the M2 hexapod motion (to correct for M1-M2 operational misalignment) and the field derotator rotation axis. Further motion axes include possible guider telescope and wavefront sensor needs. The mecatronics part of the electrical design mainly deals with the control loops.

The TCS is sub-contracted to OSL and the TCS preliminary design is described in a separate document [RD06].

The electrical design – properly speaking and beside the mecatronics and software considerations – defines the electrical cabinets, the electronics equipment and the cables required to proper functioning of the control loops.

Electrical interfaces and basic concepts shall be definitely set from the PDR.

The project has been divided in so-called loops. One loop corresponds to a specific function. An exhaustive list of the loops is shown in the reference document [RD08]. This number is important because it will be referred to in every mecatronics document.

To perform the function of each loop, we need several devices. For example, the azimuth motorization is composed of one motor, one amplifier, one encoder, one limit switch set, … Each device name has the same topology: xxx yy z where xxx is the name of the corresponding loop, yy identifies the type of device (following the IEC 204-1 standard) and z is a sequential number. The exhaustive list of each device is also shown in the reference document [RD08].

Another approach is to determine how many times the same device is used on the project. To do so, we can use the reference document [RD09] named "Bill Of Material". It lists each different device of the project and, for each of them, determine the number of pieces needed. For each device, a brief description and a summary of the main characteristics is provided.

These two documents are regularly used and updated during the life of the project. It is interesting to refer to them in parallel with the reading of the present document.

5. TELESCOPE STRUCTURE

The telescope structure is divided in 3 main assemblies: the tube, the fork, and the ground interface. This section deals with design aspects regarding those parts.

5.1 TUBE

Electrically speaking, the tube contains mainly the M2 Hexapod (loop # 210). It is an off-the-shelf one provided by PI. Physical performances are well within the internal specifications. The most critical point is the ability of the hexapod to support the load when the telescope points to the horizon. The specifications of the one we have selected gives an allowable moment of 10 N.m. This is more than sufficient as the expected value is less than 1 N.m.

The Hexapod is controlled through a 19″ rack (also from PI). It will be placed on one of the two Fork Cabinets we have placed on the Azimuth Cable Wrap (see infra). This controller receives physical demands (focus, centring and tilts) from the TCS through a serial (Ethernet) link. It converts the demands into actuator displacements and controls the actual displacements corresponding to the commanded one. The actual position of the hexapod is always available through the serial link.

5.2 FORK

The tube is moved around a horizontal axis by the elevation motorisation (loop # 110). It is located on both upper sides of the fork.

On one side, we have a brushless direct drive motor and the incremental encoder.

As shown in [RD10], the torque safety factor of the motor is about 1.7 for continuous torque and more than 2.9 for peak torque. These safety factors are calculated taking into account the worst conditions (maximum acceleration, maximum wind in the worst direction, maximum bearing friction estimation …).

In the worst conditions, the motor will dissipate 780 W. To avoid this dissipation degrades the telescope optical performances, we have to cool it. So, there is a thermal exchanger around the motor. Glycol-water will pass through the channels.

The encoder is the well known RON 905 from Heidenhain used in many high precision telescopes. It has one reference mark that will be placed close to the zenith position.

On the other fork side, we have limit switch and brake systems.

The limit swith system is composed of one electromechanical 4 position switch, a rotary cam tray with 4 channels and 4 rotary cam trips. The positioning and function of each switch is explained in [RD11].

The brake system is composed of 4 brake units. They will be used only as parking brake and will act during movement only in emergency mode. The reference document [RD10] shows that, in such situation, brakes are able to stop telescope with the application peak torque and with the maximum wind flowing in the worst direction and the telescope placed in the worst direction (i.e. the surface "seen" by the wind is the biggest). The maximum deceleration, obtained without motor torque and with the maximum wind torque in the brake direction), is 66 deg/s^2. By comparison, the specification applicable for ESO Auxiliary Telescope is 250 deg/s^2. We can conclude the deceleration is acceptable.

Brake units are pneumatically controlled. The air pressure releases the brake so that the system is in a safe situation in case of air pressure loss. A pneumatic sensor will be mounted at the end of the pneumatic pipe to determine if brake system is powered or not and to determine if elevation movement is allowed or not. The pneumatic valve will be close to one Fork cabinet.

5.3 GROUND INTERFACE STRUCTURE

The fork is moved around a vertical axis by the azimuth motorisation (loop #410). It is located at the upper part of the GIS.

The azimuth motorisation constitutes an independent table that can be built and tested separately from the rest of the telescope. This feature can be useful during the AIV period.

The motor is of the same type as the elevation one. Compared to the elevation one, its diameter is one size bigger and the width is one size smaller. Continuous and peak torques are very similar. Having a bigger diameter leads to have more pole pairs and so a lower cogging torque.

As shown in [RD10], the torque safety factor of the motor is about 3.5 for continuous torque and more than 6 for peak torque. As for the elevation motorisation, these safety factors are calculated taking into account the worst conditions (maximum acceleration, maximum wind in the worst direction, maximum bearing friction estimation …).

In the worst conditions, the motor will dissipate 125 W. Despite the fact that this value is low, we have also decided to place a thermal exchanger. Should, as we expect, our calculations be very pessimistic and the reality be less severe and leads to a lower dissipation (roughly related to the square of the torque save), we could decide to avoid using this exchanger.

We have a cross rollers bearing.

The bearing selection results always from a trade-off between the stiffness and the friction. A high stiffness is necessary for dynamic behaviour reasons. Here, the first eigenfrequency of the complete telescope is around 21.3 Hz (see [RD02] for more details). This high value is very positive for the telescope behaviour. The friction specified in the catalogue for such bearing is 80 N.m. This value is in the range of what we expect to be acceptable for our application. Nevertheless, the manufacturer has made a selection inside its production so that we will receive a "low friction" bearing. We expect to have 30 N.m bearing friction. This will help the control.

Due to the necessity of a big clear aperture (more than 150 mm) and the necessity to have an accurate encoder, we can not buy a closed version. The encoder will be composed of a tape and some reading heads. This induces that the encoder will "see" bearing radial run-outs. Once again, the selected bearing has good performances at this level (8 μm).

As already written above, the encoder will be composed of a high precision tape coupled with a number of reading heads. We will have at least two heads in order to cancel the bearing run-out effect. The exact number will be determined during the detail phase. It will probably be 2 or 4 but will not, in any case, be higher than 8. At this moment, we have already checked that it is possible to place these heads.

The limit switch system is very similar to the one we have selected for the elevation axis. Space considerations lead us to select another switch but, functionally, it is the same. The positioning and function of each switch is also explained in [RD11].

The brake system is, here, composed of 7 brake units, identical to the elevation ones. They will also be used only as parking brake and will act during movement only in emergency mode. The reference document [RD10] shows that, in such situation, brakes are able to stop telescope even with the motor peak torque and with the maximum wind flowing in the worst direction and the telescope placed in the worst direction (i.e. the surface "seen" by the wind is the biggest). The maximum deceleration, obtained without motor torque and with the maximum wind torque in the brake direction), is 86.6 deg/^{2}. By comparison to the ESO Auxiliary Telescope specification, we can conclude the deceleration is acceptable.

We will have also a pneumatic sensor be mounted at the end of the pneumatic pipe to determine if brake system is powered or not and to determine if azimuth movement is allowed or not. The pneumatic valve will be close to the main cabinet.

6. MIRROR UNITS

The telescope includes several mirrors with related equipment (mechanical supporting cells with alignment features, thermal control, protection) taken as units. This section deals with design aspects regarding those mirror units.

6.1 M1 UNIT

This topic has not electrical issue except for the M1 cover described in § 7.1 and for the M1 thermal control described in [RD03] and in § 7.2 below.

6.2 M2 UNIT

This topic has no electrical issue except for the M2 hexapod already described in § 5.1 above and for the thermal control described in [RD03].

6.3 M3 UNIT

This topic has no electrical issue except for the thermal control described in [RD03] and in § 7.2 below.

6.4 COUDE UNIT (M4-M5)

This topic has no electrical issue except for the thermal control described in [RD03] and in § 7.2 below.

6.5 FIELD DEROTATOR UNIT

The field derotation (loop # 510) is obtained by rotating three mirrors at a speed corresponding to a combination of elevation and azimuth ones.

At this level, this movement will be made thanks to an off-the-shelf motorized turn table. The definitive choice is not yet done but Aerotech table is very attractive.

The relatively big clear aperture (250 mm) allows us to imagine a stiff cylindrical structure to support the three mirrors.

The encoder is integrated in the table and has 64 800 lines/turn. The resolution is more than sufficient for the application (20 arcsec per line and with, a 1024*4 interpolation factor, 0.005 arcsec per count). Repeatability is 0.5 arcsec and accuracy is announced to be 3 arcsec. These two values are still to be analysed in relation to the derotator sub-system requirements but are in the range to be acceptable. A calibration procedure is also to be determined in order to quantify the remaining error after calibration.

The motor technology leads to have a cogging free one. This characteristic is obviously very positive for the control, especially at low speeds.

To power this table, Aerotech proposes a linear amplifier that can be controlled either in speed mode through an analogue differential signal or in position mode through an Ethernet link. We intend to use the first solution with the PMAC motion controller as a master giving the speed command.

This amplifier is not yet available but should be available for the end of this year. Should some delays be experimented, we have some backup solutions.

6.6 BACK-END FOLDING UNIT (M6)

This topic has no electrical issue. It has neither thermal issue because it is located below thermally isolating new floor the telescope ground. During kick-off meeting at Udaipur, we have concluded that this volume is air conditioned by PRL.

6.7 WFS PICK-OFF UNIT

This topic has not electrical issue. The Wave front Sensor itself is described in § 7.6 below.

7. AUXILIARY ITEMS

Beside the telescope main structure and the mirror units, some auxiliary equipment is required, that takes place on the telescope or in the close vicinity of the telescope. This section deals with the design aspects regarding those auxiliary items.

7.1 M1 COVER

The M1 mirror will be protected by a retractable cover (loop # 310). The cover will be composed of a cloth wind up around a drum. A motor will extend the cloth while a torsional spring located inside the drum will help retracting it. Two limit switches at both ends of the stroke will limit it.

7.2 M1 FLUSHING

M1 flushing is described in [RD03]. Implications in terms of electrical design are neither complex nor big.

The main critical aspect in the thermal control (not only for the M1 flushing) is to be sure enough watts with sufficient margin can be transmitted from one point to the other when valves are in their limits. This job is done by thermician people and is described in [RD03]. It leads to determine coolers, air compressor, temperature sensor positions and types, regulating positions and types …

Starting from this point, the hardware associated with the thermal control is composed of three kind of devices:

- The controller. Here, we have decided to use a PLC from B&R. The main reasons of this choice are: (i) We have already used it for thermal control without problem, (ii) complex operations on analogue value are possible (some sub-routines could be written in C), (iii) I/Os can be easily decentralized, (iv) communication with a master (the TCS) is easy, (v) the same PLC can also manage functions more classic for PLCs (i.e. M1 cover opening/closing), (vi) we have found in the variety of proposed modules the ones having the required resolution.
- Controller analogue outputs to command regulating valve. Some simulations we have done shown that even a 10-bit output could be sufficient. Here, we can have 16-bit output (64 times better than required).

- Thermal sensor inputs. To have a good accuracy, we must use Platinum sensors wired with three wires. Pt 100 sensors are classical but, with our PLC, the obtained resolution could be a limitation for our application (0.13° while the thermal control accuracy required is 1°). That is why we have decided to use Pt1000 sensors. They are also regularly used in the industrial field and, combined with the selected PLC, we obtain a 0.013° resolution. This value is more than sufficient for the application.

We have already developed a bread-board to test the reachable resolution of the above mentioned hardware. To do that, we have developed a software module and integrated it in a PLC similar to the one that will be placed on this project. The results were satisfactory. This module will be copied for each temperature loop as soon as the thermal control design is frozen.

7.3 HEAT STOP

This topic has no electrical issue except for the thermal control described in [RD03] and in § 7.2 above.

7.4 OUTPUT PUPIL STOP

This topic has no electrical issue except for the thermal control described in [RD03] and in § 7.2 above.

7.5 GUIDER TELESCOPE

The guider telescope is an important instrument to reach the required closed loop tracking performance. Nevertheless, interface between it and the electrical system is quite simple.

A power cable supplies the sensor that is linked to a PC running the centroïdation software. This software communicates with the TCS to give a pair of x,y offsets in the focal plane. The TCS performs coordinate transformation to obtain the necessary mount trajectory modifications.

Interface between Guider sensor and the TCS is explained in [RD06].

Considerations about the guider itself are developed in [RD01].

7.6 WAVEFRONT SENSOR

The philosophy for the wave front sensor is similar to the one developed for the guider.

The sensor is supplied by a power cable and connected to a PC running the software that determines the Zernike coefficients. The detail design phase will determine if it is possible to place some software on the same PC.

Zernike coefficients are transmitted to the TCS that will convert these values in M2 Hexapod command.

Interface between the Wave Front Sensor and the TCS is explained in [RD06].

Considerations about the WFS itself are developed in [RD01].

7.7 ALTITUDE CABLE-WRAP

The altitude cable wrap connects the tube to the fork. Cables and pipes transiting inside are described in [RD12].

We can see that place has already been reserved for PRL cables coming from the polarimeter and going to the proximity electronics located inside on Fork Cabinet.

The cable wrap will not be motorized and will be located close to one altitude bearing.

Some additional considerations are developed in § 8.1.2.4 below.

7.8 AZIMUTH CABLE-WRAP

The azimuth cable wrap (loop # 430) connects the fork and the upper sun shield to the ground. Cables and pipes transiting inside are described in [RD12]. At this level, four cooling water circuits are planned but reservation for a fifth one has been done. The exact number will be reviewed during detail phase but will not be bigger than 5.

One cooling water circuit goes to the upper sun shield. The rest of cables and pipes goes to the telescope.

The topology of the cable wrap is classical for AMOS and has been successfully used in many others applications (i.e. GEMINI instrument rotator, GTC auto guiding unit, ESO Auxiliary Telescope Azimuth cable wrap).

This cable wrap is motorized. A chain is fixed on an outer diameter of the rotating part. The diameter length is 2 800 mm. It is driven by a pinion which diameter is 130 mm long. So, the reduction ratio is about 22:1. The pinion is coupled to a moto-reducer. The reduction ratio is 100:1.

Starting from the maximum slewing speed of 2 deg/s, we can estimate that the azimuth cable wrap maximum speed is lower than 3 deg/s. The two different reduction ratios give 1100 rpm maximum motor speed. This is below the max admissible speed (3000 rpm).

The mass of the rotating part of the cable wrap (upper sun shield included) will be less than 3 tons[1]. It will be supported by 8 rollers. Assuming a very bad rolling coefficient of 0.01, the motorisation has to push 295 N. The track radius is about 1400 mm. This leads to a torque of 413 N.m. If we consider that the cable and pipes flexion double this value (very pessimistic hypothesis), we can consider a load torque of 1000 N.m.

Once again, we chose the conservative hypothesis by considering reduction efficiency to be 0.9 per stage. As there are two stages in the reducer, its efficiency is 0.81. The torque needed at motor level is so 0.62 N.m. We have selected a motor with 1.6 N.m continuous torque. The safety factor is 2.6.

An absolute sensor will sense the position of the telescope fork versus the azimuth cable wrap. Usually, we use a wire position sensor to do this but we will also investigate the possibility to place an analogue inductive sensor. Whatever solution we select, this solution will be input to the PLC that will format it to give a speed command to the amplifier.

Finally, there will be a finger linked to the fork placed inside a "U" block linked to the azimuth cable wrap. This block limits the relative movement of the fork versus the azimuth cable wrap and prevent from damaging cables and pipes. At the end of this stroke, there will be two inductive limit switches to stop azimuth motion.

7.9 UPPER SUN SHIELD

The upper sun shield (loop # 130) is motorized by two linear actuators, one on each side of the telescope. During maintenance, it will be possible to disconnect the upper sun shield from actuators and to move the sun shield 500 mm horizontally and perpendicularly of the elevation axis. This will allow access to elevation motorization.

As for the azimuth cable wrap, the telescope position will be sensed by an absolute sensor. One sensor will be placed on each telescope side and the PLC will check continuously if the position of each sensor is in a window centred in the middle of the stroke and if the difference of position read by the two sensors is close to 0.

The two actuators will be used in electronic gearing mode. Indeed, one actuator is selected to be the master (the one close to elevation motor) while the other one is selected to be the slave (the one close to elevation brake). The master actuator movement is dictated by the position of its analogue sensor and try to keep it in the middle of the stroke. It sends its position to the slave actuator (by an encoder output interface). The movement of the slave actuator is dictated by this information and try to be in the same position as the master one.

---

[1] : Note that the Azimuth cable wrap is not supported by the telescope pier but by the existing second floor.

Contrary to the azimuth cable wrap, the relative movement of the upper sun shield versus the tube is not limited (with the possible exception of the position sensors). Indeed, there is no reason to make this limitation here because there is no cables between the upper sun shield and the tube. Moreover, this gives better accessibility to the tube in case of maintenance.

The document [RD14] shows the corresponding calculation note. It has been done considering a 20 mm pitch screw. We are still considering using a 5 mm pitch screw. This would increase the motor speed to 900 rpm and would divide the motor torque to 3 N.m. This would correspond to a more classical speed range and would allow to select a smaller motor (in the same class). However, using the motor at 225 rpm would not cause any problem thanks to its technology (brushless motor).

7.10 CABINETS & SERVICES RELATED TO THE TELESCOPE

For the telescope itself, there will be three different cabinets:

- The Main Cabinet: it will be located in the ACE located just below the thermally isolating new floor. It will contain the PLC , the PMAC controller, amplifiers and electronics for the azimuth axis, the azimuth cable wrap, the field derotator unit, the wave front sensor
- The Fork Cabinet #1 (close to the elevation motor) will contain PLC decentralized I/Os, PMAC decentralized I/Os (TBC), amplifiers and electronics for the elevation axis and the upper sun shield master motor, space reserved for PRL polarimeter package (see also § 8.2 below)
- The Fork Cabinet #2 (close to the elevation brake) will contain PLC decentralized I/Os (TBC), M2 Hexapod controller, amplifiers and electronics for the upper sun shield slave motor.

Moreover, the TCS PC with its screen, keypad and mouse will be placed in the same room. Software modules for the Guiding CCD and the Wave Front Sensor will be also housed on a PC. Up to now, it is not yet defined if these two modules will be placed in the same PC or not but it is admitted that they will not run on the same PC as the TCS one. It is also clear that all these PCs will be located in the same room.

The Thermal Control will be managed by the PLC located in the Main Cabinet but related I/Os are located all over the installation. For example, coolers will probably be placed outside, at the ground level, while there are some temperature sensors on the upper sun shield. As already written above, there are PLC decentralized I/Os on the Fork Cabinet. They will be used to interface thermal signals (as telescope signals) located in the neighbourhood of this cabinet . Signals close to the main cabinet will be directly interfaced with the PLC. For devices located far away from these cabinets, some others boxes with PLC decentralized I/Os will be placed to interface corresponding signals. Number and positions off theses boxes will be determined during the detail phase.

7.11 BLOC DIAGRAM

The installation bloc diagram is provided in [RD13].

It helps having a global view of the system but does not contain additional information.

8. IMPLANTATION AND INTERFACES

The telescope is installed on the upper floor of the main existing building on the USO island in Udaipur. It is thus important to define how it will be implemented with respect to the existing site configuration and what appointments have to be taken. Also the interfaces with the site equipment and with specific instruments have to be accounted and defined. This section deals with design aspects regarding the implantation and interfaces of the telescope on-site. It mainly concerns two aspects:

- the telescope with its auxiliary equipment;
- the polarimeter package (out of AMOS scope) to take place between M2 and M3.

8.1 TELESCOPE AND AUXILIARY EQUIPMENT

8.1.1 Thermal Control Equipment

The thermal control is described in [RD03] .

8.1.2 Electrical and Control Interfaces

There are many interfaces. Some of them have been already discussed above in this document, some not. On this chapter, we have collected all these interfaces discussions.

8.1.2.1 Electrical Power needs

We can divide needs in three origins: electromechanical (with associated controllers), optics and thermal (coolers + control).

Optics regroups mainly the WFS and the guider CCD with their associated positioning actuator and electronics. We estimate this needs to 1 kW maximum.

Electromechanical regroups motors and amplifiers, motion controllers, PLC, TCS PC(s). If everything is used at the same time, the maximum need is about 3 kW.

Thermal control regroups coolers, air compressor needed for M1 flushing, regulating valves. The main contributor is the air compressor. Its needs about 50 kW . The total of the thermal control is estimated to be 61.4 kW.

As expressed during the kick-off meeting, the air compressor will be provided by PRL but we have integrated the anticipated consumption here to give a complete budget of the electrical power need for the telescope and its directly related facilities, even if some part of this budget are consumed by devices (mainly the compressor) provided by PRL.

Considering a 0.8 cos(φ) value, the above mentioned values lead to 82 kVA.

Assuming a tri-phase 400 V AC (phase to phase) network, we arrives at 120 A per phase.

Obviously, we do not need an UPS for the complete load. In this case, it is clear that running the telescope in UPS mode would lead to some degradations in terms of thermal control.

We could receive a "UPS power supply" and a "No-UPS power supply".

In this case, the UPS would power:

- The TCS PC
- The MCS, i.e. The motion controller with its sensors (encoders, linear sensors …), the thermal PLC and their associated auxiliary electronics.
- The WFS and its associated electronics.
- The Guider CCD and its associated electronics.
- Telescope motorisations.
- Water cooler for M1 and Heat Stop to M5

The no-UPS load would regroup:

- M1 flushing air compressor
- Coolers except the one for M1 and Heat Stop to M5
- Thermal regulating valves if they are not supplied in low voltage

Assuming the same 0.8 cos(φ) value, we will have for

UPS: 12.5 kVA i.e. 18 A per phase

No-UPS: 70 kVA i.e. 102 A per phase

In any case, if the solution to split the total load in UPS and no-UPS ones is selected, the allocation shall be carefully analysed, in particular in view of telescope safe stop and in coordination with the enclosure closing mechanism.

The UPS load could be decreased by placing an additional cooler in order to have one cooler for M1 and another one for Heat Stop to M5. The first cooler would be placed in the no-UPS circuit while the second one would be supplied by the UPS circuit. Financial aspects of this splitting would have to be discussed between AMOS and PRL project managers.

8.1.2.2 Compressed Air needs

Compressed air needs for motorisation is 6 bars (relative), filter: 5µm. We do not need to have a big flow because the compressed air is used to fill in brake units cavities.

However, thermal control needs are more important. They are expressed in [RD03].

8.1.2.3 Water needs

Water needs are expressed in [RD03].

8.1.2.4 *Cable wraps*

Cable wraps description is provided in [RD12].

Some place is reserved for AMOS needs.

Some other is reserved for PRL cables. At this level, it is important to specify some important points:

1. AMOS would like to receive, as soon as possible, the confirmation of polarimeter package data received in your e-mail dated 20th of June 07.
2. Up to now, AMOS has received no clear demand about PRL cables going through the Azimuth Cable Wrap. We can imagine there is some needs and we require to receive data (as a minimum cable number, diameter and bending radius) as soon as possible in order to take them into account.
3. Assuming PRL cables are clearly defined, it is not clear how these cables will be integrated inside corresponding cable wraps. There are three possibilities we will develop below but it is clear that AMOS will NOT integrate PRL cables on site (Udaipur):
    a. PRL provides cables to AMOS at least two months before integration. AMOS integrates PRL cables at the same time as AMOS ones.
    b. PRL gives the complete cable definition at least three months before integration. AMOS buys and integrates them at the same time as AMOS ones.
    c. AMOS reserves the necessary space for PRL cables inside cable wraps. PRL integrates cables inside cables wraps after AMOS on-site installation.

Please note that connectors at both ends are not considered here and shall be placed on to the cables by PRL after AMOS on-site installation.

Whatever solution is chosen, financial aspects will have to be discussed between AMOS and PRL project managers.

It is important to know that integration of cables after cable wrap integration (solution c.) is not obvious at all and could lead to some days of telescope stop.

In order to avoid integration delay, the solution shall be agreed at this PDR level.

8.1.2.5 *Weather station*

As already discussed PRL will provide weather information. As this data are critical, especially for TCS pointing model, it is important to be sure these values are “alive” and do not correspond to old ones.

That is why we recommend to add a time stamp in the message in order to avoid this problem.

It is not yet clear how the weather station information will be transmitted to AMOS/OSL. We could imagine than the weather station is directly connected to the TCS or we can imagine the weather station is connected to the TCS through the OCS but, in this case, it is important that the OCS only answer to a TCS request and NOT send weather information at regular time periods.

Once again, it is important to receive information at this PDR level.

8.1.2.6 UPS interfaces

The UPS (PRL supply) shall send a signal to the TCS saying there are minutes of autonomy left (with time stamp). Up to now, it is not yet clear how this signal is sent. There are two possibilities:

- A digital signal could be activated whenever there is more than minutes autonomy. So the falling edge of this signal would indicate the TCS shall start its shutdown procedure. AMOS considers this is the simplest and safest way to proceed and, if the UPS provides this possibility, recommends to implement this.
- The UPS could also have a serial (RS232 or Ethernet) link. In this case there are two possibilities:
  - The UPS is directly connected to the TCS. In this case, it is important to receive more detailed information about the protocol at this PDR level.
  - The UPS is connected to the OCS. In this case, there is a signal to be added at the socket interface and no additional information is required at this PDR level. Nevertheless, we have to know if this is the selected solution. Moreover, we consider this way to proceed as the less safe because it needs good functioning of both the OCS and the TCS, as well as a healthy OCS-TCS interface.

8.1.2.7 Hardware interfaces

Up to now, no electrical signal is hardwired neither from PRL to AMOS nor from AMOS to PRL.

Communication between TCS and OCS will be done via an Ethernet link and the interface will be the RJ 45 port on the TCS PC.

Weather station is discussed in the previous paragraph and could lead to an additional interface.

8.1.2.8 PRL supplies to be integrated inside AMOS cabinets

8.1.2.8.1 Dimensions & Weight

At this level, the only hardware from PRL to be integrated inside AMOS cabinets concerns the polarimeter package (see § 8.2 below).

We shall place two boxes inside the Fork Cabinet #1.

Dimensions and weights have been given in one e-mail dated 20/06/2007. Their characteristics are given here:

- Polarization Calibrator Electronics: 110*215*330 mm^3 (HxWxD); weight: 3 kg
- Polarization Modulator Electronics: 250*160*50 mm^3 (HxWxD); weight: 1 kg

8.1.2.8.2 Dissipation

No budget is allocated for thermal dissipation of PRL equipments. Nevertheless, AMOS needs to know dissipation of devices integrated inside AMOS cabinets in order to be sure they will not disturb the thermal distribution inside cabinet and the planned cabinet heat exchanger is sufficient.

Should this dissipation be not negligible, a financial agreement should be discussed.

8.2 POLARIMETER PACKAGE

The polarimeter package is described in the document sent by PRL by e-mail on the 20th of June 2007. It is composed of:

- The polarimeter itself. AMOS has to check its mechanical interface. This topic is discussed in [RD02].
- Cables between the polarimeter and the proximity electronics. Space has been reserved inside tube cable wrap. Others considerations about cable integration are developed in § 8.1.2.4 above.
- Calibrator and Modulator Electronics (§ 8.1.2.8 above).
- Cables between these electronics and the polarimeter high level controller. Up to now, no need is expressed by PRL. Same considerations as for the others cables are to be done.
- The polarimeter high level controller. It is PRL furniture without any interaction with AMOS supply.

S.A AMOS
ADVANCED MECHANICAL AND OPTICAL SYSTEMS

LLOYD'S REGISTER QUALITY ASSURANCE ISO9001
UKAS QUALITY MANAGEMENT 001

MULTI-APPLICATION SOLAR TELESCOPE

PRELIMINARY TCS DESIGN REPORT

[CONTRACT NO: PRUS20060004600101 FE]

Doc. nr :	AMOS/1967/30/06
Issue :	1.A
Date :	13/07/07

	NAME	DATE	SIGNATURE
Prepared by	OSL	13/07/07	
Checked by	Eric GABRIEL	13/07/07	Gabriel
Released by	Stefan DENIS	13/07/07	Stefan Denis

DISTRIBUTION LIST

Name	Company	Quantity
Archives	AMOS	original
Stefan DENIS	AMOS	1 copy
Prof. P. VENKATAKRISHNAN	PRL/USO	1 copy

CHANGE RECORD

ISSUE	DATE	NB OF PAGES	MODIFIED PAGES	REMARKS
1.0	13/07/07	11 + 60	initial issue	

TABLE OF CONTENTS

1. APPLICABLE & REFERENCE DOCUMENTS

Applicable and reference documents are defined here below. This includes documents and drawings.

1.1 APPLICABLE DOCUMENTS

ITEM	TITLE	REFERENCE	ISSUE	DATE
AD01	Tender Specification [PRL/04/05-06]	1967/03/01	-	22/12/05
AD02	User Requirements	1967/03/02	-	-
AD03	MAST Technical Proposal (AMOS)	D1660/technical	2.0	19/05/06
AD04	Compliance Matrix (revised)	-	-	01/06/06

1.2 REFERENCE DOCUMENTS

ITEM	TITLE	REFERENCE	ISSUE	DATE
RD01	Preliminary Optical Design Report	1967/30/01	1.A	13/07/07
RD02	Preliminary Mechanical Design Report	1967/30/02	1.A	13/07/07
RD03	Preliminary Thermal Design Report	1967/30/03	1.A	13/07/07
RD04	Preliminary Electrical Design Report	1967/30/04	1.A	13/07/07
RD05	Compliance Matrix (PDR issue)	1967/30/05	1.A	13/07/07
RD06	Preliminary TCS Design Report [OSL]	1967/30/06	1.A	13/07/07
RD07	Main Performance Analyses & Error Budgets	1967/01/10	1.A	13/07/07

1.3 REFERENCE DRAWINGS

ITEM	TITLE	REFERENCE	ISSUE	DATE
DWG01	General View	1967-00-00-00	A	13/07/07
DWG02	Building Interfaces	1967-00-00-90	A	13/07/07
DWG03	Polarimeter Interfaces	1967-10-00-90	A	13/07/07
DWG04	Tube General Assembly	1967-10-00-00	A	13/07/07
DWG05	Fork General Assembly	1967-20-00-00	A	13/07/07
DWG06	Ground Interface General Assembly	1967-30-00-00	A	13/07/07

2. ACRONYMS

ACE : Air-Conditioned Environment
AD : Applicable Document
Alt. : Altitude (axis)
Alt-Az. : Altitude-Azimuth (mount)
AMOS : Advanced Mechanical & Optical Systems
Az. : Azimuth (axis)
C : Compliant
DDR : Detailed Design Review
DWG : Drawing
FFOV : Full Field Of View
FOV : Field Of View
H/W : Hardware
HS : Heat Stop
I/F : Interface(s)
K-O : Kick-Off
MAST : Multi-Application Solar Telescope
mNC : marginally Non-Compliant
N/A : Not Applicable
NC : Non-Compliant
NFOV : Null Field Of View (= centre of the field)
OSL : Observatory Science Ltd.
PDR : Preliminary Design Review
pNC : partially Non-Compliant
PP : Polarimeter Package
PRL : Physical Research Laboratory (Govt. of India)
PTV : Peak-To-Valley
RD : Reference Document
RMS : Root Mean Square
RSS : Root Sum Square
S/W : Software
TBA : To Be Approved (by PRL/USO)
TBC : To Be Confirmed (by AMOS)
TBD : To Be Defined (by AMOS or PRL/USO)
TCS : Telescope Control System
USO : Udaipur Solar Observatory (PRL – Govt. of India)
WFE : WaveFront Error
WFS : WaveFront Sensor

3. SCOPE

This document forms a part of the description of the preliminary design done by AMOS for the MAST project. It is not intended at providing a thorough description of the telescope's design, but it rather defines the basic concepts, assumptions and interfaces taken into account by AMOS during the preliminary design phase.

Design documents that participate to the description of the MAST preliminary design include optical [RD01], mechanical [RD02], thermal [RD03], and electrical [RD04] preliminary design reports. These design reports can refer to specific reference documents [RDxx] whenever required. Assembly and interface design drawings [DWGxx] provide complementary information to the design description. A TCS preliminary design report [RD06] completes the list of design documents.

This document is part of the MAST PDR data package, and thus participates to the process of freezing the basic concepts, assumptions and interfaces before proceeding to the detailed design. It is important to agree on a frozen status of these design aspects at PDR level in order to avoid schedule and cost impact of design modification during the detailed design phase.

The telescope design is obviously driven by the particular object it is dedicated to observe: the Sun. On the other hand, the specific environmental conditions (especially the temperature range and variations) are also driving parameters for the design. Finally, the telescope preliminary design aims at basically complying with the design requirements expressed by PRL/USO (Alt-Az. mount, off-axis optical configuration, materials requirements for the mirrors, ...).

Whenever relevant, a justification (discussion, analysis, calculation note) of the design choices is provided or referred to (through Reference Documents). This aims at showing the good match of the design with the PRL/USO requirements ([AD01] & [AD02]). Meanwhile, specific Performance Analyses and Error Budgets related to the main MAST requirements are provided in a separate document [RD07], while a Compliance Matrix summarizes the compliance status of the design with respect to the requirements in another separate document [RD05].

This document specifically deals with the Telescope Control System part of the MAST preliminary design. It focuses on the telescope's software aspects.

4. TELESCOPE DESIGN OVERVIEW

The Multi-Application Solar Telescope (MAST) is a 50 cm diameter class telescope to be installed on the USO island on the lake Fatehsagar in Udaipur, India. It is dedicated to solar observation.

The telescope is designed, manufactured, assembled and installed on-site by AMOS. It will be installed on the upper floor of the main existing building. Some appointments of the existing pier, dome and 2nd floor will be necessary for that purpose. Moreover, some additional equipment will be required on-site for proper operation of the telescope.

An overview of the MAST design outlines 3 categories of design elements:

- the *telescope structure*, including the tube, fork and ground interface parts;
- the *mirror units*, including the primary mirror, the secondary mirror and the tertiary mirror units, the Coudé optics unit, the field derotator unit, the back-end folding unit, and the wavefront sensor pick-off unit;
- the *auxiliary equipment*, including a M1 cover and a M1 flushing system, the heat stop, an output pupil stop, a guider telescope, a wavefront sensor, the altitude and azimuth cable-wraps.

The implantation of the telescope in the existing building and the interfaces with the PRL/USO equipment and site also forms an important part of the design.

All the above mentioned design elements concern several aspects of the design:

- the optical design;
- the mechanical design;
- the thermal design;
- the electrical design.

Each of these design aspects is detailed in a separate document.

Optical Design

The *optical design* (detailed in [RD01]) is based on an off-axis afocal gregorian configuration formed by two confocal off-axis concave parabolas (M1 & M2). The ratio of the focal lengths (f_{M1}/f_{M2}) gives the angular afocal magnification, which is the reverse of the pupil magnification.

A field stop, located at the primary focus, limits the field of view to a diameter of about 6 arcmin. This field stop also and primarily serves as a heat stop (see thermal design). A pupil stop will materialize the output pupil after M2. Both the pupil stop and the field/heat stop are included in the auxiliary items list.

The specification speaks for a one-tenth pupil demagnification, and hence to a 10-times angular magnification. Thus, the collimated output beam presents a one-degree field diameter spread angle that makes the full field beam footprint quickly enlarge.

A set of flat mirrors (M3 to M6) folds the beam several times along the desired path that coincides with the mechanical altitude and azimuth axes: between M3 and M4, and between M5 and M6, respectively.

The last flat folding mirror (M6) folds the beam out of the telescope towards back-end instruments. Beside these flat folding mirrors, the optical design also includes a pick-off system that folds part of the beam towards the wavefront sensor system.

An optical field derotator takes place between M5 and M6, i.e. where the beam coincides with the azimuth axis. It is formed by 3 flat mirrors rotating as a group. The aim of this field derotator is to keep the image stationary at back-end instruments level, while the Alt-Az. mount concept basically makes the image rotate.

A guider telescope and a wavefront sensor complete the optical design aspects for the telescope, as auxiliary equipment.

Optical configuration and interfaces shall be definitely set from the PDR.

Mechanical Design

The *mechanical design* (detailed in [RD02]) is based on the well-known Alt-Az. mount concept. The telescope is then split into 3 main parts or assemblies:

- the ground interface assembly, that interfaces the telescope to the pier, supports the telescope's other main parts through an azimuth bearing, and which structure supports some equipment such as a field derotator, a mirror unit folding the beam to the back-end instruments, and a wavefront sensor unit;
- the fork assembly, which rotates around the azimuth axis, and supports the Coudé optics and the altitude bearing;
- the tube assembly, which rotates around the fork's altitude axis and includes the primary, secondary and tertiary mirrors (M1, M2, M3) units, a heat-stop, and the interface for the polarimeter package.

Most of the auxiliary equipment also concern the mechanical design: a dust protective cover and a front surface flushing system for the primary mirror, the heat stop and the pupil stop, the guider telescope and the wavefront sensor, the azimuth and altitude cable-wraps. All these items have to be implemented in the overall mechanical design.

The mechanical design also takes into account the implantation of the telescope and some auxiliary equipment (e.g. the azimuth cable-wrap) within the existing building, according to some appointments to be defined, as mentioned above. The main appointments are:

- to change the existing pier in order to support and interface with the telescope design (ground interface);
- to change the existing dome for an entirely retractable one (to operate the telescope in open-air conditions), while persistence of a collapsible wind screen with ventilation capabilities still should be considered;
- to add a new floor at ring level of the existing dome, that provides maintenance and engineering access to fork and tube equipments located above it, while thermally isolating the existing 2nd floor (with pier, ground interface and control equipment) from the open-sky upper level (with fork and tube).

Beside the implantation of the telescope in the existing building, a major task of the preliminary mechanical design is to define all interfaces with customer equipment and site, so that these interfaces are definitely set from the PDR.

The mechanical design goal is to provide a good overall stiffness (with first global eigenfrequency higher than 20 Hz), a mechanical stability suitable regarding the specification, and a robust cost effective design. Another goal of the mechanical design is to keep the beam path as short as possible, in order to limit the impact of the angular field spread. The mechanical design is also in charge of ensuring an almost deformation free support of each mirror.

Thermal Design

The *thermal design* (detailed in [RD03]) aims at controlling the impact of the solar flux on opto-mechanical elements, as well as controlling the temperature of the equipment so that the difference with respect to the ambient temperature is minimum in order to limit seeing degradation. This is done by heating and cooling of the main elements. Thermal design and control is difficult because of large variations of operating temperature and fast temperature variation (especially in the morning hours).

The thermal design mainly concerns the following equipment: telescope structure (shielding), telescope environment (paint/coating of the floor), mirrors M1 to M5 (heating and cooling concept), and obviously the heat stop. The assumption is made that a new floor (to be appointed – see above) thermally isolates the existing 2nd floor from the open-sky upper level exposed to the sun. That way, equipment that is part of the ground interface assembly or that is more generally located on the 2nd floor level (e.g. control equipment) is located in a temperature-controlled (or air-controlled) environment (ACE). This eases by far the thermal control of these items.

Thermal design also concerns the flushing system of the primary mirror and the telescope cable-wraps (or equivalent system) because of the cooling fluids.

Thermal design basic concepts and interfaces shall be set from the PDR.

Electrical Design

Electrical design (detailed in [RD04]) includes 3 aspects of the telescope design:

- electrical design itself (regarding power supply, electrical control, wiring, ...);
- mecatronics design (dealing with electro-mechanical equipments and their control);
- software design (mainly for control, thus mainly the Telescope Control Software).

Mecatronics on the MAST project mainly concerns the definition of the motion axes and the choice of equipment that performs each required motion respectful of the telescope's specified requirements. The main motion axes of the telescope are the Alt. and Az. rotation axes. Other motion axes of importance at equipment level include the M2 hexapod motion (to correct for M1-M2 operational misalignment) and the field derotator rotation axis. Further motion axes include possible guider telescope and wavefront sensor needs. The mecatronics part of the electrical design mainly deals with the control loops.

The TCS is sub-contracted to OSL and the TCS preliminary design is described in a separate document [this one].

The electrical design – properly speaking and beside the mecatronics and software considerations – defines the electrical cabinets, the electronics equipment and the cables required to proper functioning of the control loops.

Electrical interfaces and basic concepts shall be definitely set from the PDR.

THE ABOVE SHOULD BE SEEN AS A HEADER PART OF THE DOCUMENT.

THE FOLLOWING PAGES FORM THE ORIGINAL
MAST TCS PRELIMINARY DESIGN REPORT &
MAST TCS USER MANUAL
AS WRITTEN BY OBSERVATORY SCIENCE LTD.

MAST Telescope Control System Software Design Document

Version 1.1

Chris Mayer & Philip Taylor

Observatory Sciences Ltd.
William James House
Cowley Road
Cambridge
CB4 0WX
United Kingdom

1 Introduction

The Multi Application Solar Telescope (MAST) is a high performance research facility for solar physicists managed by the Physical Research Laboratory (PRL) at Udaipur. It will be used to train Indian astronomers and research students in the use of a modern optical solar telescope.

This document describes the software design of the control system for the MAST telescope.

1.1 Purpose

The intention of this document is to describe the structure of the software that controls the MAST, how it interfaces to the internal and external components and how the requirements expressed in [1] are met.

1.2 Scope

For the purposes of this project, the TCS consists of the following components

- The User Interfaces through which the observer or operator will control the telescope
- The pointing kernel that generates the demands for the altitude and azimuth axes
- Interfaces to the hardware systems that are connected to the TCS

The TCS software described here excludes the following systems

- The software that controls the M2 hexapod
- The software that controls the guider system and analyzes the images
- The PLC software in the systems that provide thermal control and hardware protection

Although these systems are not part of the TCS as defined here and are described elsewhere, their interfaces are controlled and managed by the TCS as well as the data that passes across them.

1.3 History

V1.0	June 15, 2007	Issued for Preliminary Design Review
V1.1	July 5, 2007	Updated in light of comments from E. Gabriel

1.4 Definitions, Acronyms and Abbreviations

Reference documents are defined at the end of this document.

1.4.1 Definitions

Specification document – This is the fairly brief document received originally from PRL [2]. At this time the specifications in this document are mandatory

Extended specification – This is the much larger document subsequently received from PRL [1]. The status of compliance versus these requirements will be decided at the PDR.

Reference Document – This is the extended paper by P. Venkatakrishnan and the MAST team dated July 2004 [3] from which the preceding two documents were derived. It is not part of the contract specification but as its name implies a reference document for guidance if there are ambiguities in that specification.

Virtual Instrument – the term used by National Instruments to describe an application that mimics an instrument

1.4.2 Acronyms

AOCS	Adaptive Optics Control System
ECS	Enclosure Control System
ICS	Instrument Control System
MAST	Multi Application Solar Telescope
MCS	Mount Control Subsystem
NI	National Instruments
OCS	Observatory Control System
SALT	South African Large Telescope
SOAR	Southern Astrophysical Research Telescope
TBC	To Be Confirmed
TCS	Telescope Control System
UPS	Uninterruptible Power Supply
VI	Virtual Instrument

The systems represented by the acronyms AOCS, ECS, ICS, OCS and UPS are outside the scope of the AMOS/OSL work.

2 System Overview

The TCS is implemented as a number of concurrent co-operating processes running on a single PC. The software environment used to coordinate those processes will be NI LabVIEW which provides a rich graphical programming language, easy to use GUI building tools plus support for a wide range of hardware interfaces. Apart from the graphical language used to "glue" the TCS applications together, the remainder of the TCS will be written in the C programming language. Code will be provided in both source code and compiled format except for third party libraries that are only available in compiled form.

The following sections describe the deployment and implementation of the TCS in more detail.

2.1 Deployment

The deployment diagram for the TCS is shown below

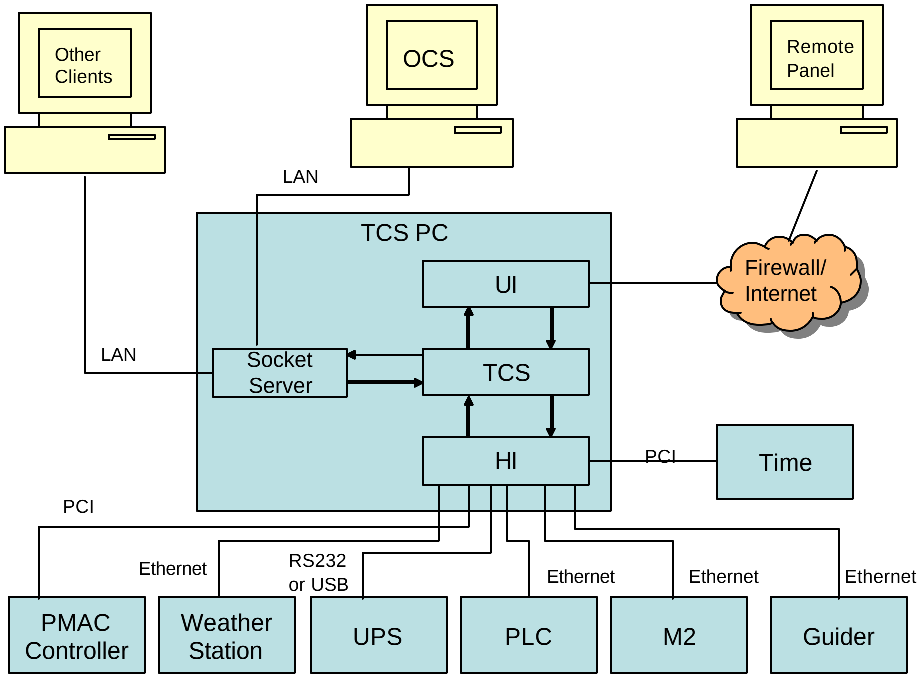

Figure 1 MAST Deployment

The TCS PC is shown in the centre of the figure. All the software developed as part of the TCS will run there. It has been shown divided up into 4 main components

- The socket server – this provides access to the publicly available TCS commands using an ASCII protocol. It provides a command interface to the TCS to allow control and sequencing from an external client.
- UI – the user interface. This consists of the screens that the operator or observer will use to interactively control and monitor the TCS. Full control of all aspects of the TCS will be available from these screens.
- TCS – this is the central kernel of the TCS. It implements command checking and validation, system monitoring and the astrometric transformations that convert the user coordinates into hardware demands.
- HI – the hardware interface. This isolates the kernel from details of how the hardware operates. It takes demands from the kernel and conditions them into the form needed by the hardware device drivers. In an ideal world it would be possible to simply rewrite the relevant parts of this layer if the physical hardware used to drive the telescope were changed without affecting the upper layers of the TCS.

The principal client of the socket server is the Observatory Control System (OCS). For the MAST system the OCS is the master controller and will sequence the TCS, Instrument Control System (ICS) and Adaptive Optics Control System (AOCS). Although the OCS is expected to be the master controller, the socket server does not preclude other clients also talking to it. If this model is adopted it is up to these other clients and the OCS to coordinate their access to the TCS. The TCS itself does not provide any interlocks to prevent one client over riding the commands sent by another or conflicting with the interactive control.

Note that all clients using the socket server are expected to be on the local LAN and behind a suitable firewall. The ASCII protocol used by socket server makes it extremely easy for any external client no matter what language it is written in or OS it is running under to control the TCS. The downside of this is that this also makes it easy for an unauthorized user to control the TCS. The TCS expects any security policy to be implemented by the observatory infrastructure.

Not withstanding the above, the TCS does provide potential access to all its functionality through a WAN connection. It does this through the LabView remote panel facility. Using remote panels, it is possible either through a Web browser or through a standalone application to give a remote user the same interactive control as a local user. It will be a matter of observatory policy exactly who and what type of access remote users have to the TCS. The default policy implemented in the delivered TCS will be to allow remote viewing from any machine but to deny remote control to everyone. If more than one simultaneous remote viewer is required it may be necessary to purchase additional licences from NI.

The hardware interfaces are at this stage in the project not fully specified. The following sections outline our current thinking.

2.1.1 PMAC Controller

The motion controller will be a Delta Tau PMAC, a powerful and flexible multi-axis motion controller providing a range of facilities for servoing, curve-fitting and interpolation, as well as implementation of custom motion control programs. Delta Tau supply a Windows driver and Observatory Sciences have written a Linux driver for the PCI version of the PMAC.

The TCS will produce a stream of time-stamped azimuth and elevation demands along with the desired velocities. The time stamps specify the time at which the mount axes should be at the desired position. The TCS will produce a new demand every 50 ms. These demands will be fully corrected to allow for the calibrated pointing model corrections (including guider inputs), differential track rates etc.

We propose that the real-time aspects of the mount control i.e. fast servo control and timing of the position demands, be performed by the PMAC motion controller itself. The required performance will not be achieved by a non real-time operating system such as Windows or Linux but, given the PMAC's facilities, there seems no need for an additional real-time system to be introduced between the PC and the PMAC.

At this stage we are looking at two possible modes to operate the PMAC.

2.1.1.1 PVT mode

PVT stands for Position-Velocity-Time. In this mode the user exerts complete control over the trajectory generated by the PMAC by specifying the end position, end velocity and time to execute each segment of a trajectory. The PMAC computes the path that matches the positions and velocities at these end points.

In order to implement this mode, the TCS loads what will be called the "Move Argument Buffer" (MAB - the terminology is taken from Gemini) with a set of position and velocity demands. To give a concrete example let us make the move argument buffer 20 elements long where each element holds a position and corresponding velocity. Further let us divide the buffer into two halves, each of 10 elements. The TCS will calculate position and velocity demands every 50ms, so the 10 entries in each half of the MAB will correspond to a segment with a time duration of 5 ms. Another software module (the Mount Control Subsystem or MCS) will fit a quadratic to the TCS generated data so that position and velocity demands can be supplied for any instant.

When the TCS is first switched to following mode, the MCS module will load the MAB with data starting at a short time in the future, perhaps t_0+0.005s. It will also load the time card with the same starting time, $t_{0,}$ so that when t_0 is reached a signal will be sent to the PMAC to initiate its reading of the MAB at the specified time. The exact means by which the signal will be sent is TBC depending on the final selection of the PMAC controller. For example in the servo drive versions of the PMAC (PMAC1 PCI) a program trigger signal (called STRT/) can be input via the J2 connector. The reason the first sample in the MAB is for t_0+0.005s is that the PMAC requires the positions and velocities at the *end* of the 5ms segment.

The two halves of the buffer are guarded by a flag that tells the MCS module whether the PMAC is reading from the 1st or 2nd half of the buffer. As soon as the MCS module detects the PMAC reading from the 2nd half of the buffer, it refills the first half with the next 50ms of data, as soon as it detects the PMAC has looped back to the 1st half of the buffer it refills the 2nd half. In this way the MCS module keeps ahead of the PMAC so that it always has the next 50ms of data to work with.

The main advantage of this scheme is that the TCS keeps tight control of the trajectory at all times. The disadvantages are that there is only one synchronization point at the start of follow mode: after that one relies on the PMAC clock to keep in sync with absolute time and for the MCS module to always keep ahead of the PMAC. Other possible disadvantages are that with large offsets the PMAC can be presented with a discontinuous jump in positions and perhaps velocities. This leads to large following errors whilst the mount slews and one relies on the inbuilt PMAC PID to bring the mechanism into step with the demands. This can be mitigated by signal shaping in the MCS module combined with modification of the PID parameters but requires more complexity there.

A simple way to relax the synchronization requirements of the MCS module is to increase the size of the buffers i.e. make the buffers 40 elements long so that each half represents 100ms. It would not be recommended to go much beyond this however as the responsiveness of the whole system would drop. Suppose each half were made 500ms for example. If the user input an offset, the telescope might not start responding for this length of time whilst the PMAC finished the buffer it was currently using and saw the new demands.

2.1.1.2 Velocity mode

NASA's IRTF telescope control system has used the PMAC motion controller in what they call "jog at velocity". In this mode the telescope is asked to jog continuously (using the PMAC J+ or J- command) and the velocity is then constantly adjusted to the desired velocity. In order to close the position loop it is necessary to correct the demand velocities for the error between where the telescope is currently and where it is expected to be. If the position is behind that required, a correction is added to increase the velocity and if it is ahead, then a correction is subtracted to reduce the velocity.

In considering the application of this method to MAST, we must remember that the IRTF is an equatorially mounted telescope. Hence, to first order, the Hour Angle axis is driven at a constant velocity and the declination axis is stationary. This does not apply during offsets and slews and so it is worthwhile investigating whether "jog at velocity" can be used on an alt-az mount.

The first point to consider is what happens if updates are late. Because, to first order, both axes of an equatorial telescope move at constant velocity then even if the updates are late the telescope may track perfectly adequately for several minutes before it is noticed that anything is wrong. For an alt-az telescope the axes are always accelerating, hence driving at a fixed velocity will soon start to diverge from the correct path. The question is how large is "soon"?

The simplest approximation to the true path of each axis of MAST is a quadratic

$$p = p_0 + v(t - t_0) + 0.5a(t - t_0)^2$$

Since the TCS computes p_0 and v every 50ms we could simply set the demand velocity to v. In this case the error term will simply be

$$e = 0.5a(t - t_0)^2$$

A better approach however is rather than set the velocity to the tangent at p_0, to set it to that velocity that will mean it arrives exactly at the next sampled position. i.e.

$$V_m = \frac{p_1 - p_0}{T}$$

Here T is the time step which is taken to be 50ms. The error can then be shown to be

$$e = 0.5a\left[(t-t_0)^2 - (t-t_0)T\right]$$

Although this is still quadratic in time, the linear term that is subtracted off keeps the error somewhat smaller than it would otherwise be. Note that the error is 0 at $t\text{-}t_0 = 0$ as well as at $t\text{-}t_0 = T$ as required. The maximum error between computed points occurs at $t_0+T/2$ and is equal but opposite in sign to the error you would have got from using the tangential velocity.

To see how large this error would be for MAST we need to know the maximum accelerations for each axis. These accelerations will occur at the solstice on June 22 before and after the Sun crosses the meridian. The plots below show the expected accelerations as a function of time for that day.

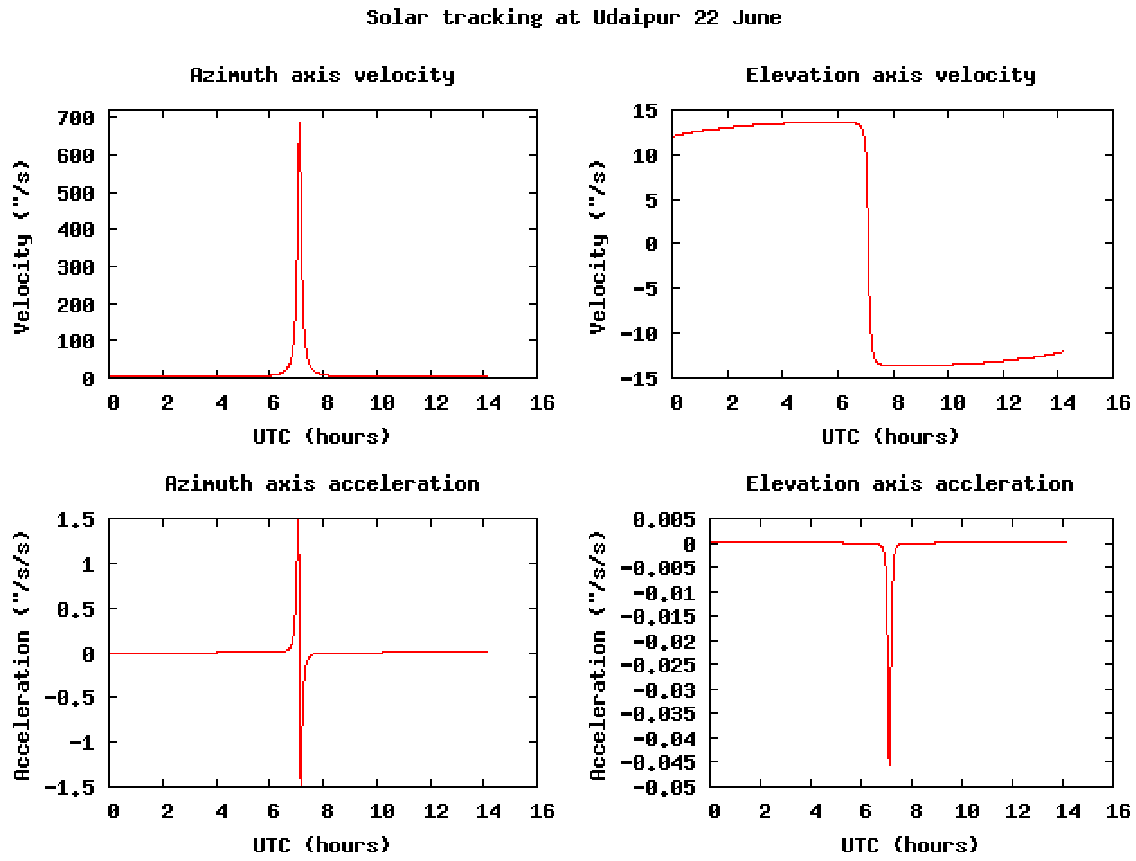

As expected, the azimuth acceleration is the larger term near the meridian where it reaches 1.5"/s/s. The table below shows the maximum errors as a function of time if we failed to update the velocity demands for the two cases of extrapolating the tangential velocity or extrapolating using V_m.

Time step	Error using v (arcsec)	Error using V_m (arcsec)	rms error using V_m (")
0	0.0	0.0	0.0

T	0.001875	0.0	0.000034
2T	0.0075	0.00375	0.000034
3T	0.016875	0.01125	0.00448
4T	0.03	0.0225	0.00929
5T	0.046875	0.0375	0.0158
6T	0.0675	0.0565	0.0240
7T	0.0919	0.07875	0.0338
8T	0.12	0.105	0.045

Table 1 Errors for time steps of 50ms

The final column shows the rms error as a function of time for the case of using V_m. This is computed by integrating the square of the error signal over the time period. This shows that the rms error would just about equal the 1s open loop tracking specification if we failed to update within 400ms. Note that this is very much the worst possible case, in general as shown by the plots, the accelerations are much less than this with a corresponding relaxation of the update times.

We turn now to closing the position loop. The IRTF documentation [5] is somewhat vague about how this is done. What is required is the current position at a fixed time along with the expected position at that time. The key here is to know these two quantities at the same instant. Suppose for example the position was measured 0.001s early compared to the demand. If the axis velocity were 700"/s which is roughly the maximum the MAST ever reaches during tracking then a position error of 0.7" would be computed and the velocity would be adjusted to make up this spurious error. The net result if the velocity stayed constant would be a 0.7" apparent pointing error. Provided this 0.001s offset stayed fixed then for an equatorial telescope like IRTF this would be calibrated out by the pointing model. This would not always be the case for MAST where for about 10% of its observing time the azimuth velocity is high and changing rapidly so the size of the offset would depend on the axis velocity. To make this method work for the MAST we would therefore require that the current encoder positions be latched at known times so that the TCS could then calculate the demand position for exactly that time and hence compute the true error.

Some of the advantages of the "jog at velocity" mode would be that there was a supervisory control loop outside that being run by the PMAC. One important benefit of this would be to be able to use a square root of error algorithm to compute the velocity corrections when the errors are large switching to a linear correction when the errors are small. This should yield a constant deceleration which will help with overshoots when slewing from a long distance.

Of the two possible operating modes of the PMAC our current baseline choice is PVT mode and this will be pursued during the design phase.

2.1.1.3 PMAC Engineering Software Support

Complete, low level configuration, tuning and trouble-shooting of the PMAC can be accomplished using the Windows-based PMAC Executive software available from Delta

Tau. Similar facilities are also provided by using the PMAC Panel software provided by Delta Tau for use with LabVIEW. These facilities should be available for use by engineers when necessary and will be particularly important during construction and commissioning, but should not normally be needed during operational use of the TCS.

2.1.1.4 PMAC Hardware Configuration

Pending a final decision on the control method to be used with the PMAC, some uncertainty remains as to the precise requirements for the PMAC controller interface. Factors to be considered include:

1. The interface to be used for data communication between the PC host and PMAC. Given our previous experience and in view of the requirement for rapid transfer of positional demands, a local PCI interface is preferred with the DPRAM option included on the card.
2. The type of axes motor drives used. Assuming that servo drives with analogue voltage demands are used, then the PMAC1 PCI range of cards should be selected. These have the advantage of providing a direct means of triggering a motion control program using an external signal input (the STRT/ Signal on the J2 connector).

2.1.2 Weather Station

At this stage the information on the interface to the weather station is the following [6]

“*Yes, we intend to install a weather station at the island site. In this case, TCS can request weather info as and when required. We anticipate ethernet link through a PC to obtain this information. The weather station that we plan to install will directly provide the dew point information also*”

The TCS anticipates being able to request at least temperature, pressure and humidity, dew point, wind speed and direction readings from this weather station at 5s intervals. These 3 values are essential for the TCS refraction calculations. The TCS will smooth this data over 60s before applying it to the refraction model. There needs to be an unambiguous way of determining if the data is bad or stale. For example, a system that when it failed just reported the last good value would be very hard to interface to as one would never know if the value just read was recent or from several hours ago.

2.1.3 UPS

The requirements to interface to the UPS come from UR0040 as augmented by [7].

At this time we await confirmation of the UPS facilities that will be provided by PRL. However, it is currently assumed that the UPS will provide a serial or USB interface, which would allow its status to be regularly monitored by the TCS. This status would enable detection of a warning to be issued by the UPS 5 minutes before closing itself down, which in turn would allow the TCS to perform its necessary shutdown operations.

2.1.3.1 UPS Monitoring Software

Depending on the type of UPS used and what software support is already provided with the hardware, the Open Source software package known as *Network UPS Tools* (NUT) might prove useful. This is described as providing "powerful and versatile client/server based approach to UPS monitoring. It supports products from a wide range of vendors." The software includes support for serial and USB connections to the UPS systems. Although the full package is supported on Linux hosts only, a useful subset of facilities (*WinNUT*) is available for use under Windows.

2.1.4 PLC

The TCS must respond appropriately to interlocks detected by the PLC and also be able to issue commands to the Thermal Control subsystems via the PLC. A draft proposal for the names of the interface variables is available in [8].

The PLCs chosen for the MAST project are manufactured by B & R. The assumption at the moment is that the B&R X20 I/O system will be used and it is further assumed that the physical connection between the TCS and the PLC will be Ethernet.

There are a number of options as to which protocol will be used to exchange commands and status between the PLC and the TCS.

1. The variables defined in the PLC could be made available over an OPC link. The PVI tool on the B&R PLC will act as the OPC server and the TCS PC would be the OPC client. Working within LabVIEW, this solution would only be available under Windows. LabVIEW can be used as an OPC client by connecting to an OPC server through a DataSocket connection. This is available in any standard (Windows) LabVIEW system. However, there appears to be an overhead in using this method such that when using more the 100 OPC variables, it is recommended to use the LabVIEW add-on called Datalogging and Supervisory Control (DSC) module.
2. Linux support may be available to use a specific B&R protocol to exchange commands/status between the PLC and TCS. This requires further investigation.
3. On either a Windows or Linux platforms, a simple protocol could be devised and implemented using TCP/IP. As it is anticipated that there will be a fixed set of commands and status used with the TCS, a table could be defined containing all the required status variables and another table with all the control variables. The TCS would send the control variables table as a frame and the PLC would answer with a status variables frame. This fixed block of command/status data would be exchanged over the network on a regular basis. Given a 100 Mb/sec Ethernet link, even at 10Hz, this data exchange should not impose a significant network load.

2.1.5 Time System

The TCS requires accurate absolute time (TAI/UTC) as an input to its position calculations. We propose using the Symmetricom bc637PCI-U GPS synchronized time reference card. The card specification states that it provides UTC accurate internally to 1 microsecond. Software drivers are provided by Symmetricom for both Windows and Linux. The card also provides IRIG-B time code output, periodic pulses and generation of a single interrupt at a precise time. The latter facility will probably be used to synchronize PMAC motion control.

If the Linux OS is adopted, the TCS could act as a master (Stratum 1) time server using the NTP protocol. The standard NTP software distribution includes a driver (called *reflock_bancomm*) which enables using the Symmetricom bc637PCI-U as a Reference Clock. With this configuration, any computer on the same local network could use the NTP protocol to obtain UTC accurate to within a few milliseconds.

If required, even more accurate time distribution could be provided by using the IRIG-B time code distribution and bc635PCI-U cards on other hosts, allowing them to be slaved to the GPS reference.

Using this Symmetricom card to act as a master NTP server is not supported under Windows. Other, Windows-based solutions may be available using different hardware (e.g. Trimble Acutime 2000).

UT and LST will be available as status items from the socket interface to the TCS or they can be computed from UTC using standard formulae.

2.1.6 Remote control power supplies

UR00340 as expressed in Section 22.1 of [1] calls for the power to MAST to be both manually and computer controlled.

The current proposed system (TBC) is that a handshake be established between the TCS and hardware using two bits as follows: The TCS will change bit #1. As soon as the PLC sees the bit change it will copy it to bit #2. As soon as the TCS sees bit #2 change it will copy its complement to bit #1. In this way each bit will switch between 0 and 1 at a frequency related to the speed of communication. The PLC will use this information in its emergency loop so that if the TCS does not update the bit #1 it will de-activate the main contactor. Low level signals will stay alive so that information (encoder positions for example) is still available at the TCS level.

2.2 Implementation

The environment chosen to develop the MAST TCS is LabVIEW. Some of the reasons for this choice are (in no priority order)

- Good support for the development of graphical interfaces
- A wide range of supported hardware
- Support for interfacing user’s own code
- A familiar environment for many engineers

Although the use of LabVIEW brings many advantages it also brings some problems

- Much of the implementation is captured in diagrams encoded in a binary format making it harder to track modifications
- Execution order is generally determined by data availability rather than the sequential order of program statements unless a sequence structure is used to force execution order.

It is probably this latter statement which reflects LabVIEW's origins as a data acquisition and analysis tool that has meant rather few projects have chosen LabVIEW for Telescope Control Applications. Notable exceptions are SOAR (www.soartelescope.org) and SALT (www.salt.ac.za).

2.2.1 Operating System Choice

National Instruments supports LabVIEW running on both Linux and Microsoft Windows platforms. The support under Windows is perhaps more mature and Windows users comprise LabVIEW's main market. However, it is not obvious that for MAST Windows is the best choice.

The advantages of a Linux platform would be

- Better support for networking and hence remote access to the MAST machine for debugging etc.
- Freely available tools such as databases, compilers etc.
- Easier integration with existing astronomical software.
- Better familiarity for the end customer – PRL are using Linux for their own AO system and it is the system of choice for most academic research institutions.

The main advantage of Windows would be

- Wide user base outside the astronomical community
- It is the most widely-used LabVIEW platform and some LabVIEW add-on features are only available with Windows.
- Familiarity for some engineering users.

In order to evaluate whether there are technical reasons to prefer using one operating system over another, a licence has been bought from NI that allows activation of both the Linux system and the Windows system and some test applications have been put together.

The overall conclusion from this exercise is that so far there are no technical issues with LabVIEW itself that would force one to choose Linux or Windows. Similarly there are no hardware interface issues from the hardware looked at so far that would favour Windows over Linux or vice-versa. There were two, not unexpected, findings:

1. When trying to link one's own code to LabVIEW the freely down-loadable versions of Microsoft's compilers were found to be disabled in this regard. Fortunately the Cygwin environment was found to be suitable so if compiler

licence costs are to be avoided and Windows is chosen then the Cygwin environment should be used.
2. Remote access to a Windows based TCS for administration would be limited unless something like VNC was installed.

In the light of the above we are proceeding on the premise that the MAST TCS will be developed under Linux. The reasons are

- LabVIEW has been shown to run under CentOS, the freely available version of Red Hat Enterprise Linux (the OS officially supported by NI).
- The Windows system software can be developed using Cygwin, which essentially transforms the Windows system to a Linux environment.
- The customer (and other potential customers) are familiar with supporting and developing Linux systems
- A Linux system would give much greater and more flexible remote access

A final point is that should a Windows solution eventually be chosen the OS that would be used would be XP. Although LabVIEW has recently been certified to run on Vista we feel that at this stage the Vista platform is insufficiently mature to constitute a stable OS.

2.2.2 Timing Stability using LabVIEW

The methods outlined in this document for controlling the MAST mount depend on having a host system that can supply position demands reliably. The precise requirement as regards timing depends on other decisions: for example, the size of the Move Argument Buffer (MAB) if the PMAC PVT mode used. In this case, a larger MAB will allow more time to fill the buffer, but this will degrade the telescope's response to new position requests or to a change of corrections obtained from the Guider.
We assume that the TCS will calculate new position demands at 20 Hz, i.e. a new position every 50 milliseconds. There is ample CPU power to perform these position calculations (only a few percent CPU load at 20 Hz) and so we can assume that the required rate can be sustained quite easily under normal circumstances. It is the circumstances when delays occur that are of interest. We do not require a totally predictable "hard real-time" response, but a reasonable figure to aim for is that the interval between successive position demands should be less than 100 milliseconds.

A simple TCS prototype application has been developed using LabVIEW which accepts a command string (using a TCP/IP socket) that specifies an object position's RA and Dec. The system includes a loop running at 20 Hz which performs a crude calculation and display of the required telescope mount Azimuth and Elevation. The 20 Hz loop keeps track of the actual elapsed time between successive calls - this should always be close to 50 ms. A LabVIEW VI runs in parallel to provide some background I/O activity by constantly opening, writing random data to, and closing, a data file.

LabVIEW VIs can have individual priorities set and so the 20 Hz calculation loop was set to the highest priority. Tests showed that the I/O activity VI (running at lower priority) had little effect on the stability of the loop timing.

However, a serious problem occurs if any windowing system activity occurs - for example, resizing or moving a user interface window or scrolling inside a window. It appears that the operating system gives high priority to handling these window events and the LabVIEW process is usually delayed until they are complete. Setting priorities for the individual VIs in LabVIEW seems to have no effect on this delay. Tests have shown that a delay due to window event handling are typically 200-300 ms. but can be as large as 1 or 2 seconds in the worst case.

The test was repeated using a VI Remote Display using a web browser. This reduced the variability in the loop timing: nevertheless there were delays of up to 200 ms. each time a request was made to reload the web page. This is probably due to activity in the LabVIEW web server.

The conclusion is that using LabVIEW in the standard way (running all Vis in a single process), using a non real-time operating system (such as Windows or standard Linux), cannot provide the timing stability that we require. Further investigations are required to determine whether these problems can be avoided by adopting a different process architecture. For example, having the time critical loop running in a separate process (or separate processor) from the user interface should avoid window event handling delays.

2.2.3 TCS PC Hardware

The deployment diagram shows that the TCS control system will run on a single PC. The precise machine will not be specified until the latest possible moment both to take advantage of the general improvement in price/performance and also to take best advantage of the manufacturer's warranties. A representative model would be an ACP-4000 Industrial PC from Advantech (www.advantech.com) with a redundant power supply for high reliability. These models are CE marked, and are rated to operate between 10° and 40° C, 10-85% RH and altitudes between 0 and 3048m. The temperature and relative humidity limits are slightly outside the required operating conditions range but will easily be met in the air conditioned environment of the computer room.

It will be advantageous if the required operating system can be preloaded and supported by the PC supplier. This will always be the case if Windows XP is adopted; Linux support is also available from certain PC suppliers.

One current concern if a single PC is used is that the user GUI displays may interfere with the timing of the control system. If this proves to be the case then the displays will be executed on a separate general purpose PC.

3 System Context

3.1 Context Diagram

A context diagram identifies all the external interfaces to a software system. In the case of MAST it identifies the interfaces between the AMOS supplied system and the customer's equipment. The existence of these interfaces has been gleaned from the requirements in [1]. Each interface shown here will be described in an ICD either as a standalone document or as a section of a larger document. In this section we are concerned only with the software interface not the hardware interface.

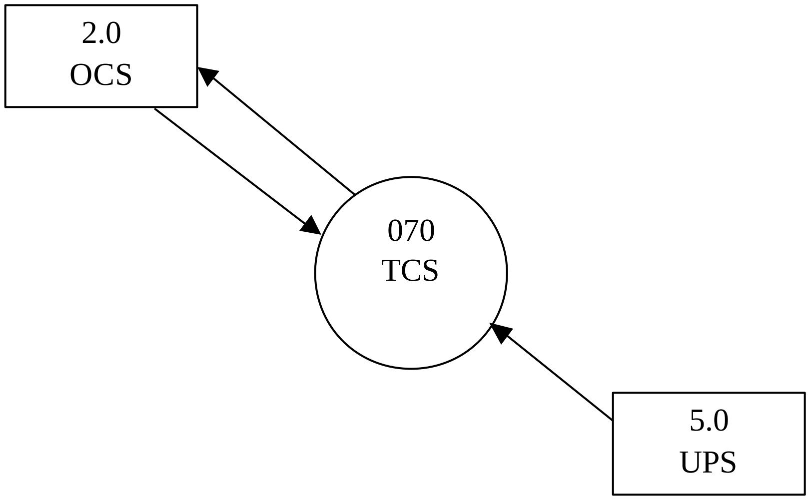

Figure 2 Context diagram of the MAST TCS

The numbering scheme for the components is arbitrary except for that of the TCS which is determined by its position within the AMOS block diagram. The individual interfaces are defined in the following sections.

3.2 External Interfaces

3.2.1 Interface 070/2.0 TCS to OCS

This is a major interface and requirement of the system covered by UR0030 and UR00460. The interface will be implemented via a socket listening on a specified port running over TCP/IP. The commands and responses sent and received over this socket will be simple ASCII strings and will be documented in the TCS User Manual [4]. The advantage of simple ASCII strings over a socket is that it is very easy for any external system no matter what language or OS it is running under to connect to and control the telescope. The disadvantage is that because of this ease, security may be a problem. It is expected that the TCS will be protected by the customer by an adequate firewall. The socket server will provide some protection in that it will be possible to configure the number of connections it will accept.

3.2.2 Interface to Enclosure

The enclosures that have been sketched so far do not require the enclosure to know the azimuth of the telescope but they do require knowledge of the elevation [3]. There are no explicit requirements in [1] however so control of the enclosure may be a manual operation.

The assumption at this stage is therefore that there is **no** requirement on the TCS to control the enclosure nor is there any need for the TCS to read and react to the status of the enclosure. This was confirmed at the Kick Off Meeting of 11 April [7]. The current azimuth and elevation of the mount will be available via the socket interface.

The main consequence of this lack of interaction is that the enclosure may vignette the telescope as the sun sinks in elevation.

3.2.3 Interface 070/5.0 TCS to UPS

This is a very tentative interface and is only included because of Section 7.5 in [1]. The UPS will give a warning 5 mins before shutting down and the telescope must then be able to put itself into a safe state within this 5 mins. The assumption is that this will require manual intervention but if the TCS had access to the UPS it could ensure the warning appeared on the status screens.

At the kick off meeting [7] it was specified that in the event of a UPS warning the TCS would take the following steps

1. Issue a warning to the OCS
2. Ask the mount and rotator to stop
3. Send a disable command to the MCS to activate brakes and disable motor amplifiers
4. Close and save any data files etc. in preparation for total power loss

The above is to be confirmed with PRL.

4 System Design

This section describes the overall design of the MAST TCS. In particular, it breaks the system down into a number of major packages. The next section then provides detailed descriptions of the structure and implementation of these packages.

4.1 Decomposition

The figure below shows the top level decomposition of the MAST TCS

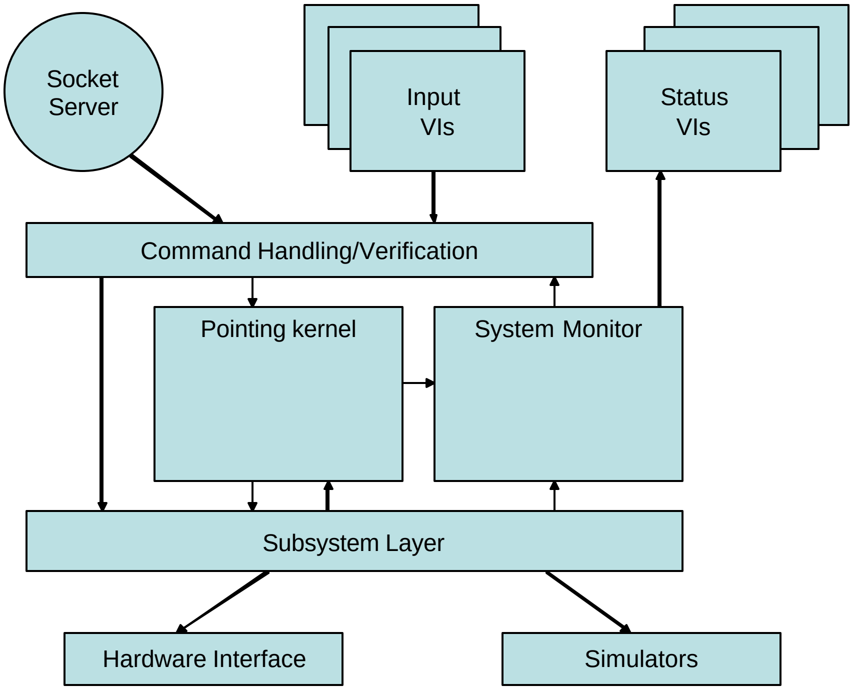

Figure 3 Top level decomposition of MAST

In the following sections each component in the above figure is described in more detail apart from the Hardware Interface which has already been covered in Section 2.1.

4.2 Socket server

Starting at the top left of the diagram we have the socket server. This provides the command line interface to the functionality of the TCS. The socket server provides the functionality that allows the TCS to be controlled and monitored by external systems. In the case of MAST the main controlling component is expected to be the OCS. A detailed description of the socket server and the protocol it implements can be found in Section 5.7.

4.3 Graphical User Interface

One of the major features that LabVIEW offers is a rich graphical user interface. Full use will be made of this to build a flexible and intuitive user interface. At this time it is planned to make use of visual indicators only although until a clear requirement can be found for audible alarms. Experience has shown that audible alarms can soon become irritating to users with the consequence that they are soon disabled.

The components labelled “Input VIs” and “Status VIs” form the graphical user interface to the TCS. They are implemented by LabVIEW front panels and will be arranged in a hierarchical fashion. By hierarchical we mean that the top-level panels will provide the most commonly available commands and status with buttons that will launch sub-screens if further details are required. In order to economise on screen space, tabbed panes will be used where appropriate.

The screens are separated into two main classes "Input VIs" and "Status VIs" in order to implement the necessary security measures and user modes. "Status VIs" will *only* have status items on them i.e. they are read only and access to any of these VIs will not allow the TCS to be modified or controlled in any way. "Input VIs" on the other hand as their name implies will allow the TCS to be controlled and configured but may also have status items on them. Access to these input VIs will be restricted both by location and user. For further details of the security policy implemented by the TCS see Section 5.1.

There will be two top-level "Input VIs" and two top-level "Status VIs" with one of the input VIs acting as master i.e. it will be possible to launch the other top-level screens from this master. The functions of the various screens are:

1. Master input – the main control screen for the TCS. Input will be via text entry boxes, push buttons, switches, dials etc. Able to launch the other top level screens
2. Solar acquisition – schematic of solar disk, pointing and clicking will slew telescope to the desired coordinates, handset for offsets.
3. Telescope status – summary of telescope state and configuration , sub-screens for details of underlying subsystems
4. Target status – display of target parameters, time to limits, elevation versus time etc.

In general update rates for status items will be 1 Hz with possibly a few items somewhat faster than this. Some control screens will be configurable to sample at higher rates for the purposes of logging and diagnostics.

Further details of these screens can be found in [4]

4.4 Command handling/verification

Although the input VIs can perform a certain amount of parameter checking, the main command handling and verification will be done by this package. Its main function is validate all input from the user prior to it being passed to the other modules in the TCS as well as signalling command and action completion. Note that the same package is used to verify commands from the GUI as well as commands via the socket server. Commands to the TCS are handled by a FIFO. If there are simultaneous users of both the GUI and socket interface then they must coordinate their actions. If they both send commands to slew the telescope to a target for example then the mount will start slewing to the first arrived target and then immediately be redirected to slew to the second arrived target.

On receipt of a command from the user all parameters for that command will be checked for validity. If any of the parameters are out of range then the command will be rejected with a suitable error message. If the command passes this first check then the next level of checking is to make sure that the new command combined with the current state of the TCS would not result in an illegal configuration. The most obvious example of this would be if the current target is below or above the telescopes elevation limit. Once all checks are passed then the command is acknowledged and the data passed to the pointing kernel or subsystem layer. This starts an action in the TCS which is monitored for completion by the Action Server (see Section 5.6). On completion of the action a final acknowledgement is sent to the command sender or, if the action failed then an error message and status is returned.

If logging is enabled then this package will write all commands and responses to the TCS log file.

4.5 Pointing Kernel

The structure of the pointing kernel is shown in the diagram below

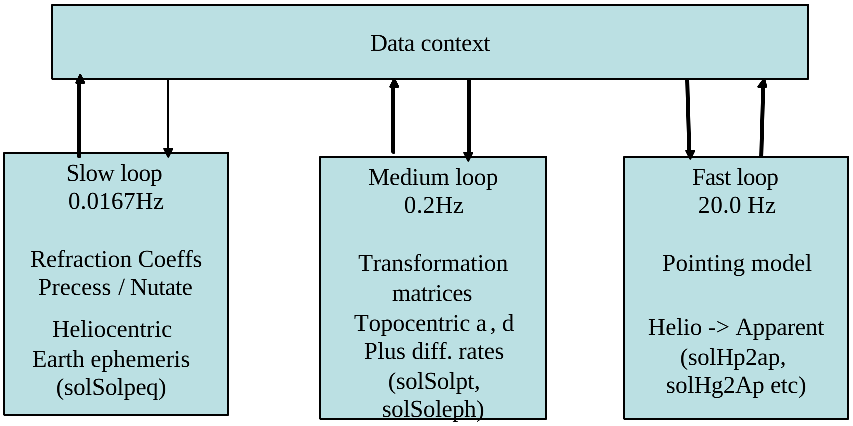

Figure 4 Structure of MAST pointing kernel

The kernel operates on a data context which is modified both by user input and status from the telescope hardware. This data context is also modified by the kernel itself which is implemented by three VIs running at different loop rates. The purpose of the three loops is to separate calculations that must run at a fast rate from those that require less frequent updating.

The slow loop runs once per minute and calculates the refraction coefficients from data supplied by the weather station, the precession/nutation matrix and the Heliocentric earth ephemeris. The results of the calculations are returned to the data context for use by the medium and fast loops.

The medium loop computes local transformation matrices to enable fast computation of offsets etc. as well as the topocentric RA, Dec of the solar centre and, using the results of the previous calculation, the differential track rates.

Finally the fast loop runs every 50ms. It converts the users heliographic or helioprojective coordinates to apparent then applies the full pointing model to generate the demand positions and velocities for the mount and de-rotator.

4.6 System Monitor

The tasks of the system monitor are:

- To keep track of action completion on behalf of the command handler
- To monitor and respond to the interlock system
- To track and report the health of the TCS sub-systems

The following sections address each of these topics in more detail.

4.6.1 Tracking action completion

The purpose of this function is to provide external systems with an unambiguous signal that can be used when sequencing the TCS. How this is done is described in detail in Section 5.6.

4.6.2 Monitor of interlock system

The following signals from the PLC and PMAC cards [8] will be treated as software interlocks.

Signal	Source	Action
Safety relay off (080_Pwr_Sta)	PLC	Allow no further motion commands until released.
Elevation over current (110_Cur_Mes)	PMAC	Kill motor axes.
Azimuth over current (410_Cur_Mes)	PMAC	Kill motor axes
De-rotator over current (510_Cur_Mes)	PMAC	Kill motor axes
Engineering switch	PLC	Disallow remote access (see Section 5.1)

4.6.2.1 Safety relay

This is the emergency switch that kills power to the system. Whilst this is off (= 0) the TCS will reject all commands either locally or remotely. Recovery from this condition will be a manual operation that is TBD. The goal is that provided power is not also lost to TCS computer then the control system will recover without requiring a restart of the TCS application.

4.6.2.2 Over current

The TCS will maintain default values of the permitted motor currents for the azimuth, elevation and de-rotator. There will be warning limits as well as alarm limits. If the motor currents exceed the warning limits the health of the associated mechanism will be set to warning. If they exceed the alarm limits then the motors will be stopped.

4.6.2.3 Engineering switch

This is dealt with in Section 5.1. Whilst the system is in engineering mode it will not be possible to control the TCS remotely.

4.6.3 TCS Health

The health of the TCS is maintained by a tree like structure with the levels good, warning or bad. If the level is warning or bad then an associated error message describes the reason. If the health in any branch of the tree is bad then the overall health of that branch will be bad. If any health is warning and there are none that are bad then the overall health is also set to warning. This tree like structure allows one to show on a top-level screen the overall state of the TCS. If this shows a warning or bad status then it is easy to bring up a sub screen that shows the health states that contribute to that value and perhaps a sub-sub-screen that specifies exactly the component that is out of specification.

In order to implement such a tree we also need upper and lower warning limits plus upper and lower alarm limits for many parameters such that when the current value exceeds those limits the relevant health value can be set. Where appropriate, the alarm limits will also be used to clamp demands i.e. the TCS will try never to send a demand to a subsystem that exceeds an alarm limit. Mechanisms that this will be important for are the azimuth, elevation and rotator. As a result of this clamping, the TCS will take no special action to drive a mechanism out of a software limit. As soon as the user inputs start generating a valid demand then this is the value that will reach the device. As long as the user input generates an invalid demand the TCS will clamp the demands to maximum or minimum it has been configured to send.

4.6.4 TCS health tree

The following are a preliminary list of what will contribute to the TCS health tree

TCS Internal
- Time – Loss of lock
  - Frequency drift
- UPS - UPS taking load
- Weather – Wind speed exceeds limit
  - Humidity exceeds limit
- Subsystems
  - Mount - Currents exceed limits
    - limit reached
    - PMAC error status bits
  - Rotator – Current exceeds limits
    - Limit reached
    - PMAC error status bits

Guider - loss of signal whilst guiding
Thermal – Temperature limits exceeded
M1 - Cover open/close time out
M2 - TBC
PLC – Safety relay off
Auxiliary - TBC

4.7 Subsystem layer

This package provides direct control of the TCS subsystems where appropriate. For example the open loop model of the positioning of M2 would be implemented here. It also functions as an interface to the pointing kernel where the demands from the kernel can be conditioned before passing on to the hardware. An example of this would be clipping the demand values to the elevation and azimuth limits of the mechanisms so that they are never asked to drive outside their physical ranges and setting an appropriate status to inform the user.

The diagram below shows the context diagram of the subsystem layer where the numbering scheme and split of functionality follows the table of loop names [7].

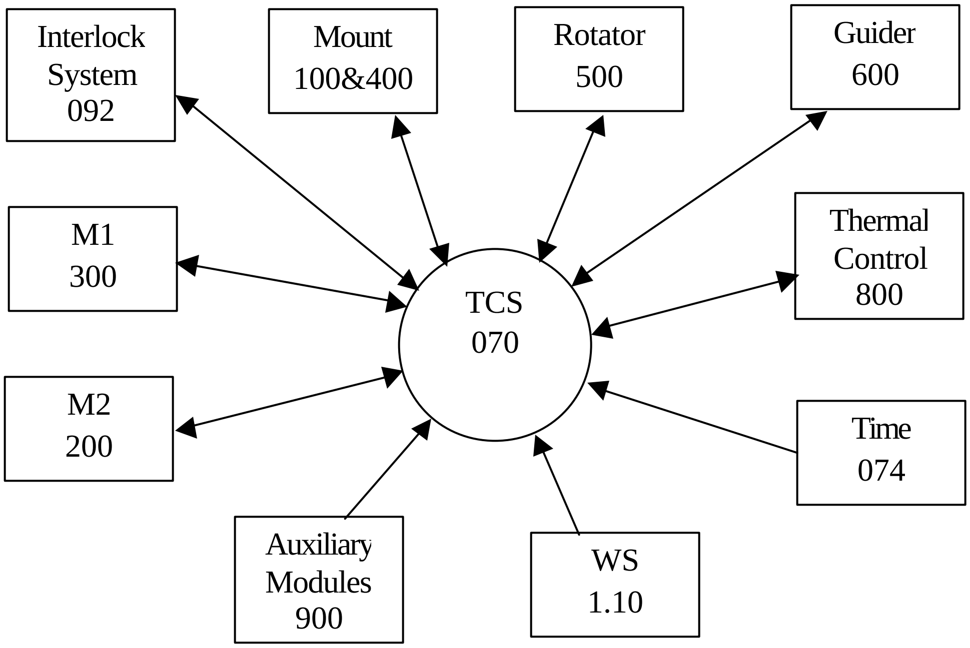

Figure 5 TCS context diagram

4.7.1 TCS to Mount ICD 070/100 & 400

The raw output of the TCS will be a stream of time stamped azimuth and elevation demands along with desired velocities. The time stamps specify the time at which the mount axes should be at the desired positions. Every 50ms the TCS will produce a new demand. These demands will be fully corrected to allow for the calibrated pointing model (including Guider information), target differential track rates etc.

Depending on the rate at which the servos need to be fed, the TCS can use this time stamped stream to interpolate the positions and velocities to a higher rate and scale the data to units that the motor controllers find sensible.

4.7.2 TCS to rotator ICD 070/500

The interface here is essentially identical to that of the mount and it is assumed the rotator interface will be the same as for the mount axes.

4.7.3 TCS to Guider ICD 070/600

The TCS is expecting to receive slow guide signals from a guider telescope. (Section 12.3 [1])
The TCS currently is expecting to receive time stamped x, y offsets in the focal plane. It will take these numbers and transform them to the coordinate system of the mount by scaling, rotating etc., filter them if necessary and then adjust the pointing model. The time stamp will allow the TCS to identify when new data is available so it doesn't integrate up a dc signal.

The physical channel that is used to convey these data to the TCS needs to be chosen. This will probably depend somewhat on how the CCD system is implemented.

The TCS itself will have a command to open and close the guide loop. This command is a command to the TCS to use or not use the guide signal. It needs to be decided if the TCS must send commands to the CCD camera or whether this is a separate standalone system e.g. is it required that the user be able to set such things as exposure time, move filters etc. from the TCS or will this be done directly from the CCD control system. Selection of mode/algorithm is another possible command i.e. will the camera be told to centroid on a star or edge find when guiding on the Sun. There will be a large number of configuration parameters for both of these algorithms.

The TCS will have provision to accept guide signals from one of a number of possibilities. For MAST there will apparently only be the guider telescope. This leaves open the possibility of accepting guide signals from the customer's AO system if it wants to off load tip/tilt from a correlation tracker. Coordinating which guide signal to use will be the responsibility of the user's system and there will be no blending of signals from different sources.

4.7.4 TCS to Thermal Control ICD 070/800

The mechanisms or functions to be controlled here are (TBC)
810 – M1 Thermal Control
811 – M1 Fans
812 – M1 liquid cooling

820 – M2 Thermal control
830 – M3 thermal control
890 – Heat stop thermal control

For each of these mechanisms we need to agree what control the TCS will have. The subsections below reflect the current state of the interface [8]

4.7.4.1 M1 Thermal Control

At this stage the M1 thermal control is still under development. The following are some of the questions that are under discussion:

Temperature set point – should this be relative to ambient or a fixed value? If relative to ambient what is the offset from ambient and where should the temperature be read from?
It is assumed the thermal control can be switched on and off completely.
What is the safe temperature range for the m1 mirror? What are the hard and soft limits and what should be the action when those limits are reached? At a soft limit we could raise a warning and at a hard limit we could close the mirror cover. This implies we have read back sensors on the mirror – how many are there going to be. If there are multiple sensors then there is the opportunity to compare them and detect if one has gone bad. This check will be made at PLC level. .

4.7.4.2 M1 Fans

Again this is TBD. Outstanding questions are:

Is this a simple on/off or are they variable speed? If variable is this linked to some condition or is it up to the user to decide? Are the fans independent of the thermal control or do they get switched on automatically as soon as the thermal control is switched on?

4.7.4.3 M1 Liquid Cooling

The description below is based on the parameters and messages listed in [8] and is to be confirmed.

The TCS will set the temperature window in units of 0.01°C around the regulator set point temperature. This set point will normally be ambient and is specified (again in units of 0.01°C) by PLC variable 812_SpT_Mes. Once the window and set point are specified, the TCS will enable regulation by setting 812_Ena_Cmd to 1.

The TCS can monitor the state of M1 cooling by reading back a) whether or not regulation is enabled b) what is the actual temperature of the cooling and c) whether the temperature is within or outside the desired range.

The role of the parameter 812_Y_Mes called “regulator action” is to monitor the position command given by the PLC to the regulating valve. Seeing this value constantly at 100 % would mean the system has not sufficient power. Seeing it oscillating would mean the PID parameters are not well tuned.

4.7.4.4 M2 Thermal control

As for M1 thermal control

4.7.4.5 M3 Thermal Control

As for M1 and M2 thermal control

4.7.4.6 Heat stop thermal control

As for previous sections.

4.7.5 TCS to Auxiliary Modules ICD 070/900

Do we actually have a control interface here or is this equipment all manually operated?

4.7.6 TCS to Master PLC ICD 070/092

The user has requirements that the control system take specific action in the case of interlocks. It is assumed that these actions will be implemented by a PLC system in hardware and that the role of the TCS software will be to monitor the interlocks and take its own action. For example in the event of an interlock that stopped the telescope motion the TCS could reject commands until the interlock was cleared.

4.7.7 TCS to M1 ICD 070/300

The only mechanism to control here is the M1 cover.
This a simple open/close control which can be achieved by setting bits in the PLC to 1 or 0. The cover status can be determined by reading two status bits which indicate whether the cover is completely open or completely closed.

4.7.8 TCS to M2 ICD 070/200

The M2 system will be controlled by a Physik Instrumente 6-axis hexapod (model PI M-824.3DG). LabVIEW VIs are provided by PI for controlling the hexapod and this software and its documentation have been downloaded from the PI website, but cannot be tested without suitable hardware. The TCS will be able to control the M2 system using the remote VI facilities built in to LabVIEW.

The TCS open loop model for each axis will be

$$x = A + B\cos(el) + C\sin(el) + D(T - T_0)$$

where the coefficients A, B, C and D will be determined by calibration. The thermal dependence will probably only be relevant for the focus motion.

Once the optical layout of the MAST is fixed, it will be necessary to perform a sensitivity analysis to relate movements in the optics to corresponding telescope optical performance. This analysis will place constraints on the accuracy with which the coefficients of the model will have to be determined as well as their reproducibility in order to meet the open loop tracking requirements of the telescope.

In addition there will be a closed loop correction from a WFS that will be integrated and added to the above open loop demands. It is understood that the WFS will supply the data as Zernike coefficients so we will need an interaction matrix to convert the Zernike data to motions in the 6 axes.

4.7.9 TCS to Time System ICD 070/074

This may be an internal interface within the TCS. The baseline choice for this interface is a bc637PCI card from Symmetricom. If the customer already has a GPS input available then a bc635 would be an alternative. The TCS computer could be set up as an NTP server that other computers could lock to or they could get their time from an IRIG-B interface if they have a suitable input.

4.7.10 TCS to Weather Station ICD 070/1.10

The TCS will need at a minimum the current temperature, pressure and relative humidity for its refraction calculations and the dew point for thermal control. These data will be read once every 5s averaged and smoothed and then used approximately once every 60s within the control system. The table below shows the names of the variables required

Parameter	Units	Range	Comments
Temperature	°C	-20.0 - +50.0	
Pressure	millibar	700 – 1100.0	
Humidity	%	0 – 100.0	
Wind speed	km/hr	0 – 50.0	
Wind direction	Degrees	0 – 360	Direction wind is blowing from: N at 0, E at 90, S at 180
Dew point	°C	??	

A protocol for obtaining these values needs to be specified along with a means of detecting bad or stale data.

4.8 Simulators

For each hardware component of MAST there will be a corresponding simulator that will allow the TCS to be operated should the hardware component not be available. The simulator will be interfaced as close as possible to the actual hardware it is replacing so that as many code paths as possible are common to the simulated and "real" systems.

The simulators will be developed mainly to allow code testing prior to the availability of the actual hardware. The prime intention therefore is to simulate the interface and not necessarily to develop a realistic replication of the hardware functionality.

Although developed for code testing, they may prove useful for training purposes by allowing the TCS to be run on a system with no attached hardware to enable operators to become familiar with the screens and controls.

5 Detailed Design

This section provides detailed descriptions of some key components of the TCS.

5.1 Startup

This section details the expected steps and facilities that will be used to bring the TCS to an operational state from a cold start.

5.1.1 Initialization files

The TCS is constructed from an assembly of VIs. Initial values for these VIs will be stored in LabVIEW style configuration files that will be read each time the VI is started. For the Telescope in general for example the latitude, longitude and height above sea-level will be stored, for the pointing kernel the default pointing parameters and for subsystems upper and lower alarm limits etc.

The configuration files are split into sections that consist of key and value pairs. They are ASCII text files and so can easily be read. The files will only be writable however by those with engineering access.

5.1.2 Software startup

The TCS application will be launched from a single icon or command. This will start the top level control window. Internally all the VIs that connect to the TCS hardware, the pointing kernel and system monitor etc. will be started. The pointing kernel will be initialized to track the RA and Dec corresponding to the current azimuth and elevation of the telescope. Note that this is only for the purposes of initializing the stream of demands there will be no hardware moved or commanded as part of the software startup.

5.1.3 Operator startup

To bring the TCS to a fully operational state will require operator intervention and the explicit issue of various commands. At the current time the following types of operation are expected:

- Enable elevation, azimuth and rotator axes and release brakes
- Enable regulation of the cooling for M1, M2, M3 and the heat stop
- Home the elevation, azimuth and rotator axes
- Open the M1 mirror cover

The above is the normal startup sequence. If the system had been shut down via the emergency stop then the only additional requirement would be to first reset the manual safety relay. The TCS will also reset all commands in order to avoid an unexpected movement when the safety relay is reset.

5.2 Access control

The MAST system has a number of requirements in terms of access by different levels of users. This section describes how those requirements will be met using the facilities provided by the MAST hardware and software.

The MAST system will have two levels of access known as Engineering and User mode (see [1] as amended by [6]). The selection of these two modes will be by a physical switch located on the telescope console. By default the TCS will assume it is in engineering mode until such time as it can read the switch setting from the PLC. During operations the TCS will poll the PLC at 1 Hz. Since the mode change is then solely a software switch, the maximum time to switch modes will be of order 1s with a more typical time of about 0.5s. Switching modes will only require operation of the physical switch i.e. the software will dynamically configure itself for the selected mode without any other user intervention.

UR0180 requires a defined procedure for changing modes as well as a method of preventing an unauthorised change of mode. Since the mode switching is by a physical switch at the telescope console this switch will be lockable by a key (in the same way as the one to disable telescope movement).
The table below summarizes the facilities that will be available under the two modes.

Feature	Engineering	User
Socket server operational	No	Yes
Remote "Input VIs" operational	No	Yes
Remote "Status VIs" operational	Yes	Yes
Switch that disables telescope movement honoured	Yes	Yes
Password access to engineering screens	Yes	Yes

Table 2 Summary of access mode facilities

5.2.1 Remote access

It can be seen from Table 2 that the distinguishing feature of engineering mode is that no remote operations are permitted that would control or modify the telescope.

If engineering mode is selected then all commands to the socket server will be rejected with a message that the system is in engineering mode. It will still be possible to open new connections to the server as status requests will be permitted.

Remote VIs are the facility provided by LabVIEW to allow remote control of a LabVIEW application. A remote VI can be a standalone application (provided the VI has been installed on the remote machine along with the LabVIEW runtime) or can run within a browser. In the event of a switch to engineering mode, the close method will be invoked on all Input VIs that have remote connections. This will close all current remote connections and return full control to the local VIs. Requests for future remote connections will be refused until such time as the system is switched back to user mode.

Note that the close method is invoked on the VI rather than the lock method. If the lock method were used then any operations executed on the remote front panel would be queued until the lock was removed. This could lead to unexpected behaviour when the system was switched back to user mode.

5.2.2 Password protected screens

Whether in engineering mode or user mode there is still a requirement that certain operations are only accessible by privileged users. For example changing the pointing model of the telescope or limit parameters of hardware. It is further required that this can be done without disrupting the normal operations of the telescope. This feature will be implemented by providing password protected Input VIs. Any attempt to launch one of these VIs will cause a dialogue box to be presented that will ask for a password before starting the VI. Only authorized users will have access to the password and hence access to the engineering facilities that the screen provides.

5.2.3 Lockout switch

The MAST requirements call for a master lockable lockout switch that will prevent all telescope movement. This is an important safety feature whose functionality will be implemented in the PLC system. (add cross reference). Due to its safety implications this switch is honored in both user and engineering mode.

5.3 Logging

The TCS provides two types of logging, system logging and data logging. System level logging occurs whenever the TCS is running and happens automatically. Data logging can be turned on/off by the user and is aimed more at engineering investigations.

5.3.1 System logging

The TCS maintains a system wide log that by default records any change in health of the TCS (see Section 4.6.3) and any internal errors in the VIs. All components of the TCS will be able to write to this log if they are configured with a suitable log level. Each line of the log file will consist of 4 values, a timestamp, the type or origin of the message, the logging level and a message in CSV format. The timestamp will record when the message was logged and the type or origin will identify who sent the message. Logging levels will be integer values in the range 0 to 4 with the default level as 0. These log levels will correspond to error, warning, info1, info2 and info3. The latter 3 are intended for debug purposes. If the log level has been set to say 3 then all messages at levels 3 and below will be logged. This will allow the switching on of additional levels of messaging if trying to identify a problem.

As already stated the default log level will be 0 and at this level only the system monitor (see 4.6) is expected to write to the log file whenever the health of the system changes. If internal errors occur in VIs then these too will be logged at this level. The VI’s will use LabVIEW error clusters to handle internal errors. All VI’s will have error in and error out nodes so that they have the option of simply passing the error on if they can’t handle it or reacting to and clearing the error. All internal errors will be handled and logged so that the TCS application runs continuously.

A new log file will be started each day when the TCS is started unless the TCS detects that a file for that day is already available. The names of the files will be constructed as yyyymmddTCS.log.

5.3.2 Data logging

Data logging also includes data viewing and will be structured around TCS subsystems. Low level engineering screens will contain plotting windows that allow continuously updating variables like currents, positions and temperatures to be plotted in strip chart format. This will allow a rapid visual inspection of data. Either integrated with these windows or as a separate tool, specified variables will be logged to a file at the users request. The file names will be prefixed with a data and time corresponding to the start of logging so as to ensure they are given a unique name. The preferred format of these files will be CSV to enable ingestion into a spreadsheet or database if required.

5.4 Pointing & Tracking

A key part of the functionality of the MAST control system is the pointing kernel. The pointing kernel used for the MAST system will be state of the art using the proprietary packages TCSpk, slalib, sollib and TPOINT. Some or all of these packages are in use or planned to be used on the world's major observatories e.g. Gemini, VLT, LBT, Soar, ATST etc. The major advantages of adopting these packages are that they have been well tested under operational conditions, have been shown to be numerically accurate to high precision and are efficient in execution.

Note that the packages as supplied encode the algorithms necessary to perform the astrometric computations, how these algorithms are strung together and interfaced to the user interface and the hardware is a matter of choice and design. The following sections highlight some of the features of these packages and how they will specifically be used in MAST.

5.4.1 User Coordinate frames

Although MAST is a solar telescope, it will support the normal range of astronomical coordinate frames as well as the more specialized solar ones. For example, it will be possible to specify targets in J2000/ICRF as well as B1950.0 and Geocentric Apparent. For all these targets it will be possible to qualify the target with its proper motions, parallax and even radial velocity. Each target can also be given a differential track rate and an effective wavelength so that non-sidereal targets can be tracked and refraction accurately corrected for.

In addition to the above frames, the MAST system will support both helioprojective (HP) and heliographic (HG) coordinate frames. The HP frame will be a tangent plane projection with the origin at the centre of the solar disk in units of the projected solar radius. In this frame the centre of the Sun is at (0.0, 0.0) and the north point of the solar limb is (1.0, 0.0). Slewing and tracking the centre of the solar disk will therefore simply be a question of specifying the target as HP 0, 0. The TCS will then take care of all the details of computing and correcting for the non sidereal motion.

The other commonly used frame for solar work will be Heliographic. These coordinates are based on the solar equator with a prime meridian that rotates relative to an inertial frame. Since there are no permanent features on the Sun, the ephemeris used to define the prime meridian is that in the Astronomical Almanac [9].

- The solar north pole is fixed at a_{2000} = 286.1300°, d_{2000} = +63.8700°
- The rotation angle W = 84.10° + 14.1844000°x(days since J2000)
- The radius of the photosphere is 6.96×10^8 m

A target given in HG coordinates will therefore follow the solar rotation which would be appropriate for tracking a particular solar feature. In order to account for differential solar rotation the TCS by default incorporates the following model

$$w = w_0 + w_1 \sin^2(\Phi) + w_2 \sin^4(\Phi)$$

where $?_0$ is 14.1844° /day, $?_1$ is -2.0° /day, $?_2$ is 0.0° and F is the solar latitude. It will be possible for the user to turn off this model or supply their own preferred coefficients.

5.4.2 Heliocentric Earth ephemeris

Key inputs to the solar pointing predictions are the Earth's position and velocity as a function of time. There are two main ways in which this can be obtained

1. Interpolate a JPL numerical ephemeris such as DE405
2. Use a mathematical model

The approach adopted in slalib and sollib is the second. It uses a simplified version of the VSOP2000 series [10]. To show the accuracy of this model, the table below lists the predictions of the model compared to the JPL numerical ephemeris for a range of dates and times. To the level of < 0.5" the results agree exactly.

Date & Time (UTC)	RA/Dec J2000 JPL	RA/Dec J2000 MAST	Differences
22/03/07 06:00	00 04 11.30 00 27 09.7	00 04 11.30 00 27 09.7	0.00s 0.0"
22/06/07 06:00	06 01 37.61 23 26 15.8	06 01 37.58 23 26 15.8	0.03s 0.0"
22/09/07 06.00	11 55 27.26 00 29 30.9	11 55 27.25 00 29 30.9	0.01s 0.0"
22/12/07 06:00	17 59 30.52 -23 26 23.5	17 59 30.54 -23 26 23.5	-0.02s 0.0"
22/06/08 06:00	06 04 41.87 23 26 01.4	06 04 41.85 23 26 01.5	0.02s -0.1"
22/06/09 06:00	06 03 38.19	06 03 38.17	0.02s

	23 26 07.5	23 26 07.5	0.0”
22/06/20 06:00	06 04 23.79 23 25 57.9	06 04 23.77 23 25 57.9	0.02s 0.0”

Table 3 Comparison of numerical and mathematical models

Although there is some evidence of a small cyclic annual error, the data for 10 years or so into the future shows this error does not grow.

5.4.3 The MAST zenith blind spot

The longitude and latitude of the MAST telescope are 73° 42’ 48.4” East, 24° 35’ 6.0” N the telescope is therefore just far enough north that the Sun never passes through the zenith. The MAST telescope therefore does not have a conventional blind spot for solar observing as set by the main axes velocity and acceleration limits although it does of course for stellar observing.

The blind spot for solar observing is set by the upper elevation limit of 88.5°. The figure below shows the elevation of the solar centre at Udaipur at different days throughout the year

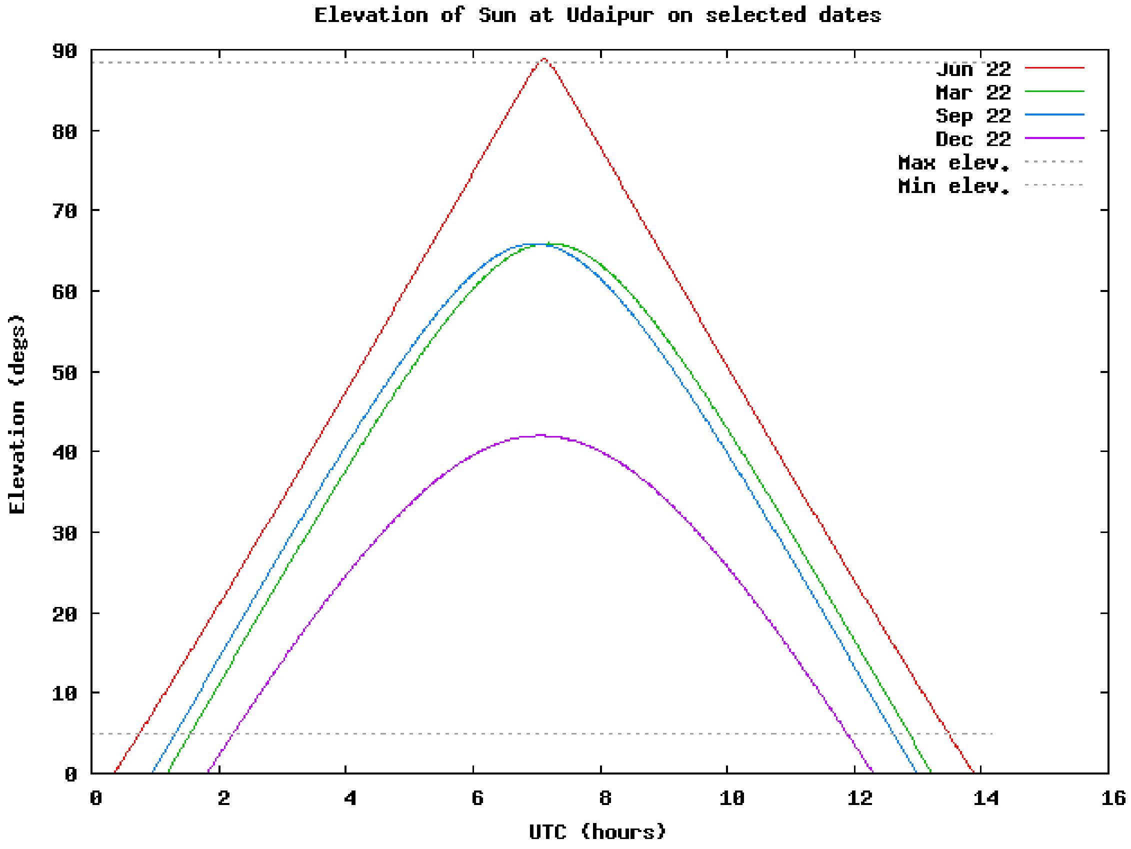

It is just possible to see that at the solstice, the Sun rises above the upper elevation limit. In fact the solar centre will not be observable for about 4 minutes on either side of transit on June 22. For days either side of the 22 June, the blackout period will be shorter but there will be some period of un-observability from June 11 to July 2.

Points on the solar disk to the north of the centre experience longer periods of blackout which start and end earlier and later in the year. It is only outside the period June 8 to July 5 that the whole solar disk is accessible to MAST throughout the day.

In order to potentially observe the whole solar disk on any date, the upper elevation limit of the telescope would need to be raised to 89.2°. The maximum tracking velocity that the azimuth axis would need to deliver at this elevation would be 902 arcsec/s and the true zenith blind spot diameter would shrink from the specified 3° diameter to 1.6°.

5.4.4 Open loop tracking performance

There are two major requirements on open loop tracking performance that potentially impact the operation of the TCS. These are that "open loop tracking must be better than 0.25 arcsec rms over 10 minutes and better than 0.05 arcsec for 1 second under all operating conditions" [2] . Achieving the first of these under *all* operating conditions will likely prove impractical given the time and effort that would need to be spent on calibrations. Achieving the second imposes a limit on the encoder resolution that can be accepted.

Let us look first at the tracking specification over 1s timescales. For this short time we can assume that the telescope axes are moving at a constant velocity. The actual path of the telescope will be a stair case like function due to the finite resolution of the encoder. If we round the demand position to the nearest encoder position and integrate the error we find that the rms error due to the finite encoder resolution is ev12. Where e is the encoder resolution. If we assign equal rms contributions to the azimuth and elevation axes then each axis requires an rms error < 0.035" over 1s corresponding to an encoder resolution of better than 0.12". In practice the encoder resolution is likely to be a factor 10 better than this.

The open loop tracking performance specification over 10 minutes under all conditions is extremely challenging. The reason for this is that for these time periods the azimuth axis can move many 10s of degrees at certain times of day and year. Unlike the short period tracking specification therefore it is the global pointing and tracking performance that determines how well this specification can be met.

The most difficult case will be as the Sun transits on 22 June. At this time the Sun will reach 88.85 degrees and the azimuth axis will be moving at it maximum speed of about 0.191°/s. If we consider the +/- 5 minutes on either side of transit the azimuth axis will move through 90.3° during this time at an average speed of 0.15°/s.

Let us consider an idealized telescope that has an imperfectly calibrated pointing model but no non-repeatable errors. Suppose the error in the determination of the northward tilt of the azimuth axis was 5". With this uncertainty in the direction of the azimuth axis we’d measure a collimation error in elevation of the same magnitude at transit. We can then ask what would be the errors plus and minus 5 minutes on either side of transit if we compensate the uncertainty in the tilt by the collimation. The answer turns out to be 3.8” which is well outside the 0.25” specification.

Another way to look at this is to ask how accurately we would have to know the tilt of the azimuth axis to meet the 0.25” specification over different time spans. This is shown in the table below

Time span around transit	Accuracy of knowing azimuth tilt
+/- 30s	< 2.4”
+/- 1 minute	< 1.23”
+/- 2 minutes	< 0.65”
+/- 5 minutes	< 0.33”

Table 4 Pointing model accuracies

The 10 minute time span requires the northward tilt of the azimuth axis to be calibrated to better than 0.33”. If the azimuth base were 1400mm across this is equivalent to measuring the flatness to a few microns.

Similar calculations can be done for the other major pointing terms with similar results. If we require about 10 terms for a good fit and each has similar uncertainties then we are going to need each term about v10 better than the calculation above i.e. each term will need to be known to an accuracy of about 0.1”.

The main problem is meeting the specification under *all* operating conditions. The situation only gets this bad for a ten minute period around transit. Much looser limits on the pointing model calibration are possible if a period around transit is excluded. Suppose for example we excluded a +/- 15 minute period around transit and again we had an un-calibrated error of 5” in the tilt of the azimuth axis. If we acquired the Sun 10 minutes prior to this we’d measure collimation corrections of -1.13” and -4.85” in elevation and azimuth. If we then tracked for 10 minutes the resultant error would be 0.39”. In order to meet the 0.25” specification we’d then need to know the azimuth tilt to < 3.2” which is a factor 10 less stringent than the case for tracking through transit. Widening the exclusion zone would bring down the required calibration accuracy even more.

If the open loop tracking specification were to be relaxed in this way then constraints on determining the pointing model would not dominate the open loop performance. Whether the telescope could meet these more relaxed requirements would then be dominated by non-repeatable or un-measured thermal and mechanical effects.

5.4.5 Closed loop tracking performance

The diffraction limit of the MAST telescope is 0.3” at 600nm. If we make the optimistic assumption that the very best seeing at the site is 0.5” then this would give a resolution of

0.6” in the very best conditions. To keep the image elongation less then 0.1” then the required rms jitter during closed loop tracking must be < 0.4”.

It will be more challenging to correct for steady drifts, in this case the maximum drift allowed over 1 hour is directly < 0.1”. For example, if the guider was a full disk imager even at 1”/pixel it would require a 2kx2k CCD. If the solar limb in each pixel in which it was present was detected to half a pixel then the accuracy of detecting the solar center from pixels on opposite sides of the limb would be 0.7”. If we argued we had approximately $p*d/(2*s)$ independent determinations of the solar centre where d is the solar diameter in arcsec and s is the pixel sampling then the resultant accuracy would be 0.013”.These order of magnitude estimates indicate from an algorithmic point of view that the required accuracy can be reached. A bigger question is whether the flexure between an independent guider and the main telescope can be maintained to < 0.1” over periods of an hour.

5.4.6 Calibration

The pointing model of the telescope can be adjusted in three different ways depending on the number of parameters that need to be updated and the time available for their measurement. These three different ways correspond to determining the default, session and local pointing values. The default values are the full set of pointing parameters as determined by a full pointing test. They could be re-determined nightly but are more likely to change on the time scale of months. The session values will be determined on a daily basis exactly when and how often will depend on the feasibility of day time stellar observing. The local values will likely be determined at the start of each new observation. The methods for determining these pointing corrections are described in the following sections.

5.4.6.1 Full pointing test

The assumption here is that full pointing tests will be performed at night using catalogues of bright astrometric stars. The pointing reference will be the de-rotator axis. The tool used to reduce the data will be TPOINT. This package is used by nearly every large telescope and is robust and well documented. A further advantage of TPOINT is that its pointing terms are integrated with the pointing kernel so that terms fitted by TPOINT can be immediately included into the telescope’s pointing model.

The way TPOINT will be used will be that the user selects a star from the catalogue and slews the telescope to that position. The image will then be adjusted using offsets until it is on the fiducial position. The user will then log the data to a file by clicking an accept button. The next star will then be selected and the operation repeated. For a full pointing test some 50 to 100 stars will be logged in this way.

Next, the standalone TPOINT application will be started and passed the file of logged data. The user will then interactively fit the data until the residuals show random scatter. Identifying the significant terms in the pointing model will take a little time the first time a full pointing test is performed on MAST but after that a more automatic procedure can be adopted where the set of pointing terms is fixed.

Once a model is obtained it can be interactively entered into the control system via the appropriate engineering control screen by a suitable qualified user i.e. one with access to the engineering screen password. (see Section 5.2.2). Once the performance of the model has been verified then it should also be entered into the default configuration file so that next time the TCS is started the new model is loaded automatically.

5.4.6.2 Session pointing parameters

In [1] (as clarified in [6]) these parameters are referred to as "start of day pointing calibrations". The parameters to be determined will be ca, ce and ia. In order to separate ca and ia, it will be necessary to observe targets at both high and low elevations. For this reason it will not be possible to use the Sun itself, either pre-dawn stellar targets will be needed or if day time stellar targets can be observed then the session parameters can be determined after sun rise. The determination of the session parameters constitute a short mini pointing test using say 5 to 6 targets.

The procedure for performing this mini pointing test will be semi-automatic in that the observer will be required to centre and log the targets but once 5 to 6 stars have been used, a customized TPOINT fit will be performed automatically where all the other pointing parameters are held at their default values.

5.4.6.3 Local pointing parameters

Local pointing parameters consist of the collimation corrections ca and ce. They are local in the sense that they are correct for a localized area close to where they have been measured. The terminology used in [1] (as clarified in [6]) for this process is a zero-set but in this document we will reserve that term for zeroing any incremental encoders. Local pointing parameters will be determined by a pointing calibration using the Sun's disk. The TCS will be commanded to go to Helioprojective coordinates (0, 0) and the guide software will compute the centre of the solar disk using something like the Canny algorithm. It will then report the offset between the fiducial centre and solar centre which the TCS will apply to the pointing model.

5.5 Offsets

The TCS will provide offsetting facilities both on the sky and in the focal plane and in a range of coordinate frames. In general internally the TCS retains three separate numbers to generate a target position: a base position, a user offset and a handset offset. These three numbers are simply added together to generate the final demand. The reason for retaining three separate numbers is the convenience in zeroing out the offset terms in order to return back to default position. This relieves any higher level system from keeping track of the separate contributions.

Consider an example where the user slews to a new target then uses the handset to tweak the position onto some fiducial mark and then sequences a grid of observations at that point. In order to get back from any point in the grid to the original tweaked position all that is necessary is to set the user offset to zero. If all the numbers had been added together then the user would have needed to re-slew to the base position and then re-tweak or have kept track of how much the handset had been used.

5.5.1 User offsets

It is planned to offer 3 main types of offset two of which will have two flavours. The three types of offset are solar frame offsets, RA/Dec offsets and pointing origin offsets.

Solar frame offsets will be possible in either Helioprojective or Heliographic coordinates. RA/Dec offsets will be available in either a tangent plane or RA/Dec frame.

Pointing origin offsets refer to where the image falls in the focal plane. A change of pointing origin does not affect the target coordinates although it does affect the azimuth and elevation demands to the encoders.

Note that the commands that set user offsets will be absolute i.e. each time a command is issued it will simply replace the previous offset. For example if a user offset of 5” followed by a user offset of 2” is issued then the resultant total offset will be 2” not 7”. This is in contrast to the handset interface described in the next section where each command increments the offset by the amount specified.

5.5.2 Handsets

Four different types of handset will be available. Three types will correspond to the user offsets described in the previous section and the fourth will be a pointing handset that increments the collimation pointing parameters ca and ce.

The handsets will be configurable with regard to the size of the offset applied each time a button is pressed.

5.6 Action Server

The action server is the component within the TCS that signals action state changes to the outside world. These state changes are what an OCS or ICS will use to sequence operations on the TCS.

It is important to distinguish between commands and any actions started by those commands. The former complete synchronously a very short time after the TCS receives the command. The latter complete asynchronously and this may happen some time after the command completes. A good illustration of the difference is a command to slew the telescope to a new position. The command completes as soon as the parameters are verified or rejected. The action completes only when the mount axes and de-rotator are tracking within specification.

The action server maintains an overall state object called TCSActionState. This object can take the values Busy, Idle or Error. Its value is generated from the values of the action state variables associated with the mount axes, de-rotator, command handlers etc. in the following manner:

If any of the action state variables are Busy then the overall state is busy. If none are busy but any are in error then the overall state is error otherwise the overall state is idle.

The initial list of action state variables is as follows

AzActionState – refers to activity of the azimuth axis
ElActionState – corresponds to activity of the elevation axis
RotActionState – refers to activity on the de-rotator
FastActionState – a generic variable to handle "short" actions
AzSentActionState – used when a command is expected to start an azimuth action
ElSentActionState – ditto for elevation axis
RotSentActionState – ditto for de-rotator

How each of these variables is maintained is described below

5.6.1 AzActionState

This variable along with ElActionState and RotActionState are all maintained in the same way. If the telescope has been commanded to slew and the axis is not within tolerance then the variable is busy. If it is within tolerance then it is idle. If a command has been issued and a problem occurs such that the axis is late or will never reach its final destination then the value is set to error.

Note that if the telescope is tracking then the variable will be idle. It will be set to idle as soon as the slew completes with the axis within position and velocity tolerances. It will then stay idle until another command is issued that will cause the axis to slew. Just going out of tolerance will *not* cause the variable to be set busy unless there is an associated command.

The reason for the above algorithm is that these variables are present to explicitly support the OCS and ICS. These systems need to know when the telescope matches the configuration that they have requested and thus will only move to busy as the result of a command.

5.6.2 FastActionState

This is a generic variable to handle "fast" actions. A fast action might be one that simply involves internal settings within the TCS. The TCS command handler will explicitly set this to busy when it accepts the command and then set it to idle 0.1s later. This will guarantee that any command sent to the TCS will always trigger a transition to busy and then idle that the OCS/ICS can use to sequence their commands.

5.6.3 AzSentActionState

For each mechanism action state variable there is a corresponding action state variable used internally by the TCS that it sets when it expects the mechanism action state variable to change. The reason for this variable is for when a high level command would cause actions to start in multiple mechanisms. What we need to avoid is a situation where one mechanism might complete its action before another has even started. In this case the TCSActionState variable would return to idle and then shortly after revert back to busy again. The OCS or ICS would then assume the action was complete and move on to the next part of their sequence.

The TCS will set the AzSentActionState variable to busy as soon as it accepts a command that it expects will cause an action in the azimuth axis. This variable will have a timeout and will set its value to error if the timeout expires. The timeout will be cancelled if the corresponding AzActionState variable goes busy within the timeout period.

5.7 Socket server

The socket server provides an ASCII command line interface to the MAST TCS. It can be used to sequence the TCS either from an instrument or an Observatory Control System. The number of basic commands that can be accepted by the server is deliberately quite small so that the protocol can be kept as simple as possible.

Command	Description
get <status-item>	Fetch a status item from the TCS
monitor <status-item>	Asynchronously receive the value of a status item when it changes
monitorOff <status-item>	Turn off a previous monitor.
do <tcscommand> <keyword=value> …	Execute a function within the TCS
disable <ack | done>	Disable acknowledgements or completion events
enable <ack | done>	Enable acknowledgements or completion events

The table above shows the complete list of commands that the socket server will accept. Full details of status-items and tcscommands that the system will accept can be found in the TCS User Manual. Here we are just concerned with the overall protocol.

The MAST socket server listens by default on port 7283. On opening a connection to this port, the user application will receive the message “Connect: OK” or “Connect: Busy”. If “Connect: Busy” is sent then this means the server already has more connections than it is configured for. It will immediately close the socket descriptor at its end with the result that EOF will be sent to the client. All clients should check that they receive the “Connect: OK” message before proceeding.

Get – the command get <status-item> will return a response got <status-item> <value>. If the <status-item> is not recognized then the response will be got <status-item> Unknown.

Monitor – the socket server will send a message mon <status-item> <value> every time that the value of <status-item> changes. An initial value will be sent immediately.

MonitorOff <status-item> – turns off a previous monitor. There is no acknowledgement or error message so you can safely send monitorOff even though there is no monitor currently set.

Do <tcscommand> <keyword=value> - There are different numbers of keyword value pairs for each tcscommand. See the user manual for specific examples. By default a do command generates up to two responses. The first is an acceptance or rejection of the command. If the command is accepted then a second response is sent when the actions started by the command have completed. The format of the first response is ack <tcscommand> <val> <message>. If val < 0 then the command has been rejected and the reason is given in the message field. If val > = 0 then the command has been accepted and the message field will be "Ok". The format of the second response is done <val> <message>. Again if val < 0 then the actions started by the command ended in error and the message field gives the reason.

Disable <ack | done> - this command can be used to turn off acknowledgements and/or completion messages. This is not recommended but can be useful under some circumstances.

Enable < ack | done> - This command can be used to enable acknowledgements or completion messages. These messages are enabled by default.

The above set of commands provides a simple protocol for an external client. The steps needed are

1. Make and establish a connection
2. Send a do command
3. Block for acceptance or rejection
4. If accepted either wait in the current or a separate thread for completion.
5. Send the next command in the sequence.

5.7.1 Action completion

The socket server has a separate thread that maintains a list of connected clients. It also monitors the state of the action server object TCSActionState (see Section 5.6). If a client has an outstanding command and the action server object changes state then it constructs a suitable "done" message for transmitting back to the client.

6 Documentation

All documentation produced for the MAST control system will be in English and delivered in both printed (1 copy) and electronic form. The electronic copies will be in PDF format. The documentation will consist of the following

- TCS Software Design Document – this document
- TCS User Manual – this will function both as a user and software manual. It will describe how to build and install the system as well as how the system can be operated from the command line and graphical interface. It will also describe the calibration procedures.
- TCS Acceptance Test Plan – this will list the tests and the results for each of the requirements in [1] and [2].
- Third party library documentation – any third party libraries that are used e.g. TPOINT will be delivered with their supporting documentation

7 Compliance Matrix

The table below summarizes the user requirements of the MAST TCS with cross references to the sections of this document that address those requirements. Following this cross reference is a key to show how well the design matches the requirements. The codes are:

C	Compliant
mNC	Marginally Non-Compliant
pNC	Partially Non-Compliant
NC	Non-Compliant

No.	Origin	Reference	Requirement
UR0010	[1]Section 7.2	Section 4.6.2 **C**	Vendor will make provision to stop all telescope motion in the event of an interlock.
UR0020	[1]Section 7.3	Section 4.4 **C**	All telescope requests and data entered should be verified to ensure that they are syntactically and parametrically correct.
UR0030	[1] Section 7.4	Sections 5.7, 5.3 and [4] **C**	Error reports from subsystems should be logged both by the subsystems and should be propagated to the higher level systems for inclusion in a daily error log.
UR0040	[1]Section 7.5, [7]	Sections 2.1.3 & 3.2.3 **C**	UPS will give warning 5 mins before shutdown
UR0050	[1]Section 7.6	Section 5.1 **C**	The telescope systems should start up again in an orderly fashion after an anomalous shutdown. There is no requirement for an automatic startup.
UR0060	[1]Section 12.1	Section 5.4.2 **C**	The accuracy of acquiring the Sun should be < 10 arc sec and the differential pointing accuracy should be < 0.5 s
UR0070	[1]Section 12.2	Sections 5.4.4, 4.7.8 **pNC**	RMS open loop tracking accuracy over 10mins must be < 0.25” and <0.05” over 1s under all operating conditions
UR0080	[1]Section12.3	Section 5.4.5	Closed loop tracking on solar limb must

		Possible NC	yield elongation no greater than 0.1” over 1 hour.
UR0090	[1]Section 12.6	Section 4.7.8 **C**	Tip/tilt secondary or aO system
UR0100	[1]Sections 13.1- 13.4	Section 2.2.2 **C**	Operating environment. PC is located inside an air conditioned room.
UR0110	[1]Section 16	Section 3.2.2 **C**	Enclosure is responsibility of Physical Research Laboratory but an ICD should be generated.
UR0120	[1]Section 17 as amended by [6]	Section 5.1 **C**	Two modes of control will be available for MAST • Engineering • User
UR0130	[1]Section 17.1	Sections 5.2.3 **C**	Lockout switch required.
UR0140	[1]Section 17.2	Section 5.2.2 **C**	Facilities must exist for local engineering control of all telescope subsystems.
UR0150	[1] Section 17.3	Section 5.1 **C**	Engineering control will be enabled by a physical switch at the telescope console.
UR0160	[1]Section 17.4	Section 5.2.1 **C**	Facilities must exist for local and remote interactive control
UR0170	[1]Section 17.5	Section 5.1 **C**	Must be possible to change modes without a complete shutdown
UR0180	[1]Section 17.6	Section 5.1 **C**	Unauthorized change of observing mode must not be possible
UR0190	[1]Section 17.7	Section 5.1 **C**	Time for observing mode change should not exceed 5 min
UR0200	[1]Section 18.1	Section 5.1 **C**	A system of levels of user access to systems should be established.
UR00210	[1]Section 18.2	Section 5.2.2 **C**	Local engineering access to status must be available at all times and must not disrupt normal operations.
UR00220	[1]Section 18.3	Section 5.2.2 **C**	UR00210 is also required for remote engineers
UR00230	[1]Section 18.4	Section 5.2.2 **C**	Facilities must exist for authorized software engineering access. This must not disrupt normal operations
UR00240	[1]Section 18.5 as amended by [6]	Section 5.2.2 **C**	Super users must have access to TCS tuning parameters. This must not disrupt normal operations.
UR00250	[1]Section 19.1	Section 5.3.1 **C**	All software systems must be fault tolerant and report informative messages to the user interface
UR00260	[1]Section 19.2	Section 5.3.1 **C**	All software systems must handle failures gracefully
UR00270	[1]Section 19.3	Section 5.3	All system errors and status changes will

		C	be logged
UR00280	[1]Section 19.4	Section 4.3 **mNC**	During interactive use both visual and audible alarms should be used to indicate fault conditions.
UR00290	[1]Section 19.5	Sections 4.4 and 4.3 **C**	User interface must protect against unsafe operations and maximize status visibility to user
UR00300	[1]Section 20.1	Section 5.1 **C**	Engineering access should be accessible locally and remotely at authorized sites and to authorized users only.
UR00310	[1]Section 20.2	Section 5.1 **C**	Engineering interface should allow monitoring of all encoder outputs, digital and analog signal lines and PSU voltages
UR00320	[1]Section 20.3	Section 5.2.2 **C**	The ability to set certain predefined parameters locally should be provided.
UR00330	[1]Section 21.1	Sections 4.2, 4.3 **C**	The user interface shall be both command line and GUI based
UR00340	[1]Section 22.1	Section 2.1.6 **C**	Power to MAST should be capable of manual and computer control
UR00350	[1]Section 22.2	Sections 4.6, 4.6.2 and [4] **C**	Drive currents, encoder positions, limit switch trips and PSU voltages should be monitored and the ability to log the results provided.
UR00360	[1]Section 22.3	Section 4.6.2 **C**	Appropriate actions to safe the telescope should be carried out if any monitored items of UR00350 exceed predefined limits.
UR00370	[1]Section 22.4	Section 5.1.1 **C**	Final safety limits should be alterable by hardware settings or if by software, only on site.
UR00380	[1]Section 22.7	Add ref to mechanical documentation	Recovery from a hardware limit trip should only be possible manually within the telescope enclosure.
UR00390	[1]Section 22.6	Section 4.6.3 **C**	Attempted recovery from software limits should be possible remotely by authorized users.
UR00400	[1]Section 23.1	Sections 5.3 and 5.7 **C**	Prime responsibility of TCS is control of pointing and tracking and as a uniform interface for higher level modes of operation
UR00410	[1]Section 23.2	Section 2.2.1 **C**	All I/O should be interfaced to a computer running a stable OS
UR00420	[1]Section 23.4	Section 3.2.1 and [4] **C**	The TCS computer should make available all position and status information to other computer systems that require it.

UR00430	[1]Section 23.5	Section 4.3 and [4] **C**	The TCS will provide an interface to all control functions
UR00440	[1]Section 23.5	Sections 2 and 6 **pNC**	The TCS will come with source code and documentation
UR00450	[1]Section 23.5	Section 4.3 **C**	A GUI will be provided
UR00460	[1]Section 24	Sections 4.2, 5.7 and [4] **C**	A documented interface should be provided to allow TCS control from an OCS developed by the customer
UR00470	[1]Section 25.1	[4] **C**	The TCS will accept coords as mean RA(0.01 s of time) and DEC (0.1 arcsec)
UR00480	[1]Section 25.2	[4] **C**	The ability to set non sidereal tracking rates in RA and DEC should be provided. Non sidereal rates will be expressed in s/s in RA and "/s in DEC
UR00490	[1]Section 25.3	[4] **C**	It must be possible to specify the rotator position angle in terms of position angle on sky or mount position angle
UR00500	[1]Section 25.4	[4] **C**	The ability to set the rotator zero-points should be available to a suitably authorized user.
UR00510	[1]Section 25.5	Removed [6]	The ability to set a "floating" rotator should be provided. i.e. the TCS does not set the rotator to a specific PA but when it gets on target tracks from where it is.
UR00520	[1]Section 25.6	[4] **C**	The ability to set the telescope at a specified Alt/Az is required.
UR00530	[1]Section 26.1	Section 5.4.6.3 **C**	A start of day zero set should be provided based on Almanac values.
UR00540	[1]Section 26.2	Section 5.4.6.2 **C**	A start of day pointing routine should be provided. It should operate without user supervision.
UR00550	[1]Section 26.3	Sections 5.4.6.2 & 5.4.6.3 **C**	The basic parameters of the telescope pointing model should be adjustable by authorized users.
UR00560	[1]Section 26.4	Section 5.4.6.1 **C**	The necessary logging should be provided to allow a full pointing calibration to be carried out by hand
UR00570	[1]Section 26.5	Section 5.1.1 & [4] **C**	Other pointing model parameters should only be alterable by authorized users.
UR00580	[1]Section 27.1	[4]	The ability to slew the telescope at a user

		C (assuming differential tracking ??)	defined rate in RA and DEC should be provided with a keypad like interface.
UR00590	[1]Section 27.2	Add ref to mechanical design	Offsets of 20 arcmin must be done with an accuracy of the open loop tracking performance
UR00600	[1]Section 27.3	Section 5.5 **C**	The TCS must be able to perform tangent plane and RA, Dec offsets
UR00610	[1]Section 27.4	Add ref to mechanical design	Time for offset is to be < 2s for a 1 arcmin offset and < 5s for a 5 arcmin offset
UR00620	[1]Section 28.1	Section 4.3 **C**	A TCS status display must be provided and update automatically at least once per second
UR00630	[1]Section 28.2	See draft list in [4] **C**	The status display will include at least the following info (see [1] Section 28.2 for detailed list)
UR00640	[1]Section 29.1	Section 2.1.5 **C**	The current UT and LST will be served by the TCS via the LAN to an accuracy of approx. 1s rms
UR00650	[1]Section 30	Section 6 **C**	A complete set of user documentation will be provided in English. One bound copy and one version on CD-ROM in PDF format.
UR00660	[1]Section 30.1	Section 6 **C**	Engineering support documentation to facilitate local engineering fault finding and rectification
UR00670	[1]Section 30.2	Section 6 **C**	Scheduled maintenance documentation
UR00680	[1]Section 30.3	Section 6 **C**	Design Documentation

8 References

[1] User Requirements Document from customer, PRL

[2] Tender details for a turn-key Optical Solar Telescope, PRL

[3] Multi Aperture Solar Telescope, Venkatakrishnan, P. and MAST Team, Udaipur Solar Telescope

[4] The MAST Software User Manual, Chris Mayer

[5] TCS3 Servo System Design: Software, Tony Denault, IRTF

[6] E-mail from Nandita Srivastava to AMOS dated 11 May 2007

[7] Kick off meeting report 11 April 2007, Eric Gabriel

[8] AMOS/1967/29-10 Software ICD, version 1A, Jean-Marc Tortolani

[9] Seidelmann, P.K. (ed) 1992, *Explanatory Supplement to the Astronomical Almanac*, ISBN 0-935702-68-7

[10] Moisson, X & Bretagnon, P. 2002, *Analytical Planetary Solution VSOP2000*, Celestial Mechanics and Dynamical Astronomy, **80**, 3-4, 205-213

MAST Telescope Control System User Manual

Version 0.0

Chris Mayer

Observatory Sciences Ltd.
William James House
Cowley Road
Cambridge
CB4 0WX
United Kingdom

1 Introduction

This is a draft outline of the User manual consisting of mostly headings only to show what is planned. Some very preliminary tables of screens, commands and status items are included in order to keep track of the requirements in [1]

1.1 Intended readership

1.2 Purpose

1.3 Revision Control

1.4 Definitions, Acronyms and Abbreviations

1.4.1 Definitions

1.4.2 Acronyms

2 Overview

2.1 Scope

2.2 Facilities

3 Quick Guide

3.1 Installing and Building

3.2 Hardware Requirements

3.3 Starting the System

4 Step by Step Guide to the TCS

4.1 Initializing

4.2 Tracking the Sun

4.3 Setting a target

4.4 Offsets

4.5 Guiding

4.6 Calibration

4.7 Error recovery

5 Engineering facilities

6 Command line interface

6.1 Commands

Commands accepted by the socket server are listed below

Command	Parameters	Description
rotator	PA = value frame = <FK5 | FK4 |ICRF| AZEL> Equinox = value iaa = value	Position angle (degs) Rotator frame Equinox of frame Instrument alignment angle
sun	frame = <HP | HG> coord1 = value coord2 = value	Heliographic or Helioprojective Longitude (degs) or number Latitude (degs) or number
target	name = string frame = <FK4 | FK5 | ICRF> RA = value Dec = value Equinox = value Epoch = value parallax = value pmRA = value pmDec = value rv = value	Name of target Target coordinate frame RA as sexagesimal string Dec as sexagesimal string Target equinox (e.g. J2000.0) Target epoch (e.g. 2007.4) Parallax (arcsec) Proper motion (sec/yr) Proper motion (“/yr) Radial velocity (km/s)
targetdifftrack	frame = <FK5|FK4|ICRF> equinox = value refepoch = value diffra = value diffdec = value	Differential track frame Equinox Reference epoch RA track rate (s/s) Dec track rate (“/s)
targetwavelength	lambda = value	Effective wavelength (microns)

6.2 Status values

This section tabulates all the status items that can be retrieved from the TCS using get or monitor. Although there is a column for the parameter’s type, this is for guidance in converting the data, all values are actually returned as strings.

In a table of this type it is always difficult to know whether to group items together in a logical way or to keep to a strict alphabetical list. Here we use an alphabetic list. Often we wish to distinguish between current values and demand values. All current values are prefixed by “cur” and all demand values by “dem” when it is needed to distinguish between them. Finally capitalization is used in naming parameters where this follows convention e.g. curRA but note that the TCS is case insensitive so this parameter could be asked for as “CurRA”, “curra” etc. When the TCS returns the value it will always be in lower case.

Parameter	Range/Units	Type	Description

actionState	Idle | Busy | Error	String	Overall state of TCS control system
baseX	mm	Float	Base pointing origin in X
baseY	mm	Float	Base pointing origin in Y
curAirmass	1 – 11.5	Float	Current airmass normalized to 1 at the zenith
curAppDec	-90 - 90°	Float	Current apparent Declination
curAppRA	0 - 360°	Float	Current apparent RA
curAzimuth	85 - 275°	Float	Current mount azimuth
curElevation	5 – 88.5°	Float	Current mount elevation
currM2Focus	mm	Float	Current M2 z position (focus)
curRMA	-360 - 360°	Float	Current rotator mechanical angle
demAirmass	1 – 11.5	Float	Airmass at the demand position normalized to 1 at the zenith
demAppDec	-90 - 90°	Float	Demanded apparent Declination
demAppRA	0 - 360°	Float	Demanded apparent RA
demM2Focus	mm	Float	Demanded M2 z position (focus)
demMeanDec	-90 - 90°	Float	Demanded mean J2000 Declination
demMeanRA	0-360°	Float	Demanded mean J2000 RA
demRMA	-360 - 360°	Float	Demanded rotator mechanical angle
health	Good | Warning | Bad	String	Overall health of system
healthMessage		String	String describing the health
localTime	0 - 24	Float	Udaipur Local Time (UTC + 5.5)
LST	0 – 24	Float	Local Sidereal Time
m1Cover	Open | Closed | Moving | Unknown	String	Status of mirror cover
m1SuppStatus	TBD	??	Mirror Support Status
offsetDec	arcsec	Float	Declination offset
offsetRA	s	Float	RA offset
offsetX	mm	Float	Offset of pointing origin from base in X
offsetY	mm	Float	Offset of pointing origin from base in Y
oilPressStatus	TBD	??	Oil Pressure Status
telStatus	Tracking | Slewing | Parked | Stopped	String	Telescope motion status
UTC	0 - 24	Float	Universal Coordinated Time

Table 1 Status items available from socket server

7 Screen descriptions

This will contain screen shots of each screen with a description of the functions provided. The current sketches express some initial ideas

7.1 Master

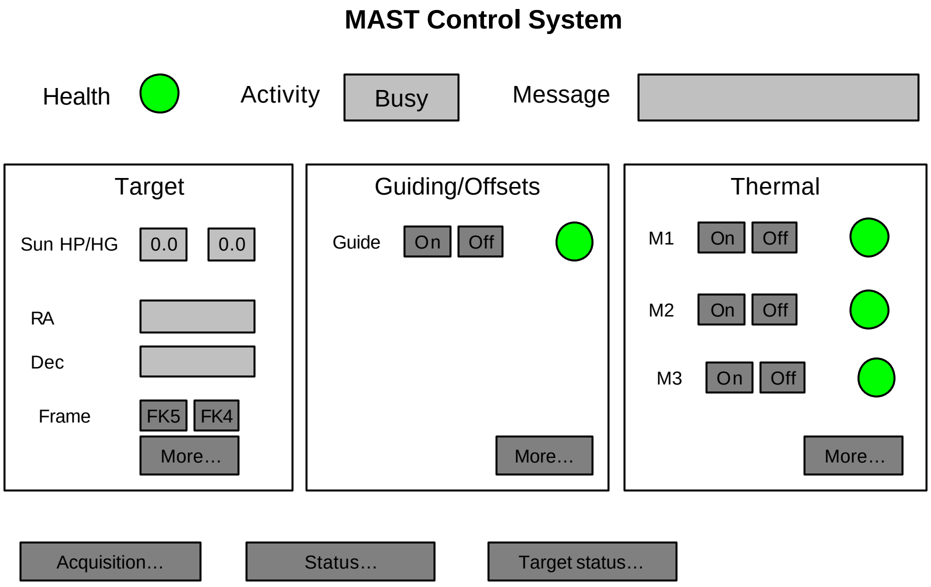

To add:
Mirror cover control

7.1.1 Control sub screens

Currently just a list of what is needed without deciding how the screens should be partitioned

Weather – need switch to go from automatic to manual mode. Automatic reads from the weather station. Manual takes input from the user. This is for cases where the weather station isn't available.

Initialization – commands to enable control and release brakes of azimuth, elevation and rotator.

Full pointing model (pass word protected) – display of all current pointing parameters as read from initialization file. Input fields to modify the running model. Button to save values back to initialization file ?

7.2 Acquisition

Solar Acquisition

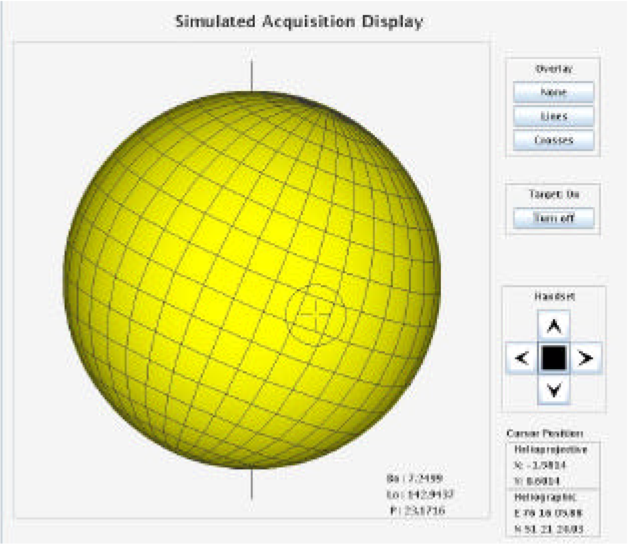

The idea here is to have a schematic of the Sun that can be clicked on using the cursor. A handset can be used to offset the telescope.

7.3 Status

Items for top level screen

Health
Health Message
Button to launch health tree screen
Activity i.e. Busy/Idle/Error
Activity message
Local time
UTC
LST
RA
Dec
Az
El
Rotator
Az error
El error
Rotator error
Mirror cover
Status of safety relay

Buttons for subsystem sub-screens

7.3.1 Weather status screen

Numeric displays of raw data plus strip charts.
Numeric display of smoothed data plus strip charts
Whether in manual or automatic mode
Health of weather system

7.4 Target status

RA
Dec
Airmass
Plot of elevation versus time
Time to limits
LST
Helioprojective coords if appropriate
Heliographic coords if appropriate

7.5 Mount screens

7.5.1 User Control

Init
Park
Home/Zeroset
Move
Stop

7.5.2 Engineering control (pass word protected)

Software limits for:
Azimuth upper limit
Azimuth warning upper limit
Azimuth warning lower limit
Azimuth lower limit
Elevation upper limit
Elevation warning upper limit
Elevation warning lower limit
Elevation lower limit
Velocity limits?
Motor current warning and upper limits

7.5.3 Status

PMAC fault bits – split into separate items where appropriate
Overall health plus health message

Action state i.e. busy/idle/error. If error then also error message
Azimuth demand (degs)
Elevation demand (degs)
Azimuth current (degs)
Elevation current (degs)
Azimuth error (degs)
Elevation error (degs)
Azimuth velocity (degs/s or arcsec/s)
Elevation velocity (degs/s or arcsec/s)
Motor currents
PMAC raw values of the above to appear on a separate screen

It would be useful to be able to select any of the above and plot/log them on request

7.6 Rotator screens

These will be structured like mount screens only there will be one axis rather than two.

7.7 Thermal

7.7.1 Control

M1 Thermal control
M1 Fans
M1 liquid cooling on/off
M1 liquid cooling set point
M1 liquid cooling temperature window
M2 liquid cooling on/off
M2 liquid cooling set point
M2 liquid cooling temperature window
M3 liquid cooling on/off
M3 liquid cooling set point
M3 liquid cooling temperature window
Heat stop liquid cooling on/off
Heat stop liquid cooling set point
Heat stop liquid cooling temperature window

7.7.2 Status

Overall thermal health
M1 Thermal control status??
M1 Fans status
M1 liquid cooling status i.e. on/off
M1 liquid cooling in range status
M1 set point temperature
M1 temperature window

M1 actual temperature – as strip chart and numeric.
M2 liquid cooling status i.e. on/off
M2 liquid cooling in range status
M2 set point temperature
M2 temperature window
M2 actual temperature – as strip chart and numeric.
M3 liquid cooling status i.e. on/off
M3 liquid cooling in range status
M3 set point temperature
M3 temperature window
M3 actual temperature – as strip chart and numeric.
Heat stop liquid cooling status i.e. on/off
Heat stop liquid cooling in range status
Heat stop set point temperature
Heat stop temperature window
Heat stop actual temperature – as strip chart and numeric.

The option is required to log the 4 current temperatures to a file should this be required.

7.8 UPS

What can be monitored here will depend on what type of UPS is available this is TBD

8 Maintenance

9 References

[1] User Requirements Document from customer, PRL

[2] Tender details for a turn-key Optical Solar Telescope, PRL

[3] Multi Aperture Solar Telescope, Venkatakrishnan, P. and MAST Team, Udaipur Solar Telescope

S.A. AMOS
ADVANCED MECHANICAL AND OPTICAL SYSTEMS

C 1967

PRL

Multi Application Solar Telescope

AMOS / 1967 / 01-01 : Cal

El & Alt Motorisation calculation note

SCOPE

The aim of this document is to provide calculations made to determine elevation and azimuth motorisations.

Issue	*Date*	*Modifications*
1.D	*11/07/2007*	Issue number coherent with MAST numbering system
1.3	*23/04/2007*	Issue 1.3: issue with motor types selected for PDR

COMMENTS

Issues 1.1 and 1.2: motor types not selected

		Date	*Signature*
Prepared by	Eric GABRIEL		
Checked by	Christophe DELREZ		
Released by	Stéfan DENIS		

UNITS

$rev := 2 \cdot \pi$ $rpm := \frac{rev}{min}$ $t := 1000 \cdot kg$ $dm := \frac{m}{10}$ $lit := dm^3$ $bar := 10^5 \cdot Pa$

CLIENT SPECIFICATIONS

Mechanical limits

Altitude max limit (from horizon) $Alt_{max} := 88.5 \cdot deg$

Altitude min limit (from horizon) $Alt_{min} := 5 \cdot deg$

Voltage supply $V_{sup} := 120 \cdot V$ phase to neutral

Max site altitude (§13.4) $alt := 1700 \cdot m$

Surface t° difference far away from optical beam (§11.d) $\Delta Ts := 1.K$

Maw wind speed (§13.3) $N\_wind := 30 \cdot \frac{km}{hr}$ $N\_wind = 8.333 \frac{m}{s}$

Max slewing speed (§12.4) $N\_max := 2 \cdot \frac{deg}{s}$

AMOS INTERNAL SPECIFICATIONS

Water temperature difference allowed $\Delta Tw_{110} := 10 \cdot K$

ETEL DATA

MOTOR TMA 0360-050 3VAN with water cooling

Peak Torque $T_p := 707 \cdot N \cdot m$

Continuous Torque $T_c := 375 \cdot N \cdot m$

Stall Torque $T_s := 291 \cdot N \cdot m$

Back EMF $Ku := 15.7 \cdot V \cdot s$

Torque constant $Kt := \sqrt{3} \cdot Ku$ $Kt = 27.193 \frac{N \cdot m}{A}$

Electrical resistance (between terminals) $R_{20} := 6.29 \cdot \Omega$

Electrical inductance (between terminals) $L_1 := 44.2 \cdot mH$

Continuous power dissipation $P_c := 2950 \cdot W$

Number of pair poles $p_{mot} := 66$

Max. detent torque (average to peak) $T_d := 4.4 \cdot N \cdot m$

Drive dissipation (AMOS estimation) $P_{drive\_diss} := 50 \cdot W$

Drive voltage drop $V_{drop\_drive} := 1.5\cdot V$

Water cooling channel section $S\_wc := 8\cdot 5\cdot mm^2$ $S\_wc = 40\,mm^2$

Equivalent channel diameter $dia\_wc := \frac{(8+5)}{2}\cdot mm$ $dia\_wc = 6.5\,mm$

BEARING DATA

Bearing friction coefficient $\mu := 0.01$

Altitude bearing diameter $dia\_bearing_{110} := \frac{(200+250)}{2}\cdot mm$ $dia\_bearing_{110} = 225\,mm$

BRAKE UNIT

Coremo TBN

Brake unit force with new linings $F\_brake\_new := \frac{80\cdot N\cdot m}{(125-33)\cdot mm}$ $F\_brake\_new = 869.565\,N$

Brake unit force with maximum wear $F\_brake\_old := \frac{45\cdot N\cdot m}{(125-33)\cdot mm}$ $F\_brake\_old = 489.13\,N$

Minimum release pressure $p\_rel\_min := 4.5\cdot bar$

Altitude braking radius $r\_br_{110} := \left(\frac{450}{2}-33\right)\cdot mm$ $r\_br_{110} = 192\,mm$

AMOS DATA

Nominal speed $N\_nom := 1\cdot\frac{deg}{s}$

Nominal acceleration $a\_nom := 0.5\cdot\frac{deg}{s^2}$

Max acceleration $a\_max := 2\cdot\frac{deg}{s^2}$ $a\_max = 0.035\frac{1}{s^2}$

Wind pressure calculation (static) $C_e := 1.13$ $I_w := 1$

$C_q := \frac{2}{3}\cdot 3.6$

Air density $\rho_{air} := 1.2\cdot\frac{kg}{m^3}$

At sea level: 1.2 kg/m^3

Bearing friction safety factor $Sf\_bearing := 1.3$

Altitude axis (110)

Detent torque (%) $Td_{\%} := \frac{T_d}{T_c}$ $Td_{\%} = 1.173\,\%$

Inertia moment $J_{110} := 6.012\cdot 10^2\cdot kg\cdot m^2$ $J_{110} = 601.2\,kg\,m^2$

Tube mass $m_{110} := 1027\cdot kg$

Data for surface calculation

For altitude axis, the most important surface seen by the wind is the tube that will consider fully obstructed (heatstop, polarimeter, ...)

Tube surface estimation $S\_trapezium := \frac{(900 + 480)}{2} \cdot 1863 \cdot mm^2$ $S\_trapezium = 1.285\,m^2$

$S\_rectangle := 900 \cdot 200 \cdot mm^2$ $S\_rectangle = 0.18\,m^2$

$S\_tube := S\_trapezium + S\_rectangle$ $S\_tube = 1.465\,m^2$

Tube surface seen by the wind at min altitude position

$S\_wind_{110} := S\_tube \cdot \cos\left(Alt_{min}\right)$ $S\_wind_{110} = 1.46\,m^2$

Tube application force radius $r\_wind_{110} := \frac{(1863 + 200)}{2} \cdot mm$ $r\_wind_{110} = 1.032\,m$

Thermal aspects

Glycol-Water heat capacity $C_{H2O} := 3500 \cdot \frac{J}{kg \cdot K}$ $C_{H2O} = 3.5 \times 10^3 \frac{J}{kg \cdot K}$

Glycol-Water density $\rho_{H2O} := 1.056 \cdot \frac{kg}{lit}$ $\rho_{H2O} = 1.056 \times 10^3 \frac{kg}{m^3}$

Coeeficient viscosité dynamique $\nu_{H20} := 1.15 \cdot 10^{-6} \cdot \frac{m^2}{s}$

Pipe inside diameter $dia_{pipes} := 13 \cdot mm$

CALCULATIONS

BEARING FRICTION

Altitude axis (110)

Tube weight	$w_{110} := m_{110} \cdot g$	$w_{110} = 1.007 \times 10^4 \, N$
Bearing friction force	$F\_fr\_be_{110} := w_{110} \cdot \mu$	$F\_fr\_be_{110} = 100.714 \, N$
Calculated bearing friction torque	$T\_bearing_{110} := F\_fr\_be_{110} \cdot \dfrac{dia\_bearing_{110}}{2}$	$T\_bearing_{110} = 11.33 \, N \cdot m$

ATS experience: Friction torque = 25 Nm

Estimated bearing friction torque	$T\_bearing_{110} := \max(T\_bearing_{110}, 25 \cdot J)$	$T\_bearing_{110} = 25 \, N \cdot m$

WIND TORQUE CALCULATIONS

Mean wind torque

Design mean wind pressure (Handbook OPY pg 12-19) - valeurs statiques

$$P\_mean := C_e \cdot C_q \cdot I_w \cdot \frac{1}{2} \cdot \rho_{air} \cdot N\_wind^2 \qquad P\_mean = 113 \, Pa$$

Axis unbalance will be lower than friction.

Altitude calculations

Mean wind force	$F\_wind_{110} := P\_mean \cdot S\_wind_{110}$	$F\_wind_{110} = 164.968 \, N$
Mean wind torque	$T\_wind_{110} := F\_wind_{110} \cdot r\_wind_{110}$	$\boxed{T\_wind_{110} = 170.164 \, N \cdot m}$
Inertia torque	$T\_inertia_{110} := J_{110} \cdot a\_max$	$\boxed{T\_inertia_{110} = 20.986 \, N \cdot m}$
Unbalance torque	$T\_unb_{110} := T\_bearing_{110}$	
Max continuous torque	$T\_cont_{110} := T\_wind_{110} + T\_bearing_{110} + T\_unb_{110}$	$\boxed{T\_cont_{110} = 220.164 \, N \cdot m}$
Peak torque	$T\_peak_{110} := T\_inertia_{110} + T\_wind_{110} + T\_bearing_{110} + T\_unb_{110}$	$\boxed{T\_peak_{110} = 241.15 \, N \cdot m}$

MOTOR CALCULATIONS

Stall conditions

Motor frequency $f_{mot} := N\_nom \cdot p_{mot}$ $\boxed{f_{mot} = 1.152\,\mathrm{Hz}}$

We are in stall conditions when motor frequency is < 1 Hz.

Torque safety factors

Max peak torque per motor $T_{peak} := \max\left(T\_peak_{110}, T\_peak_{410}\right)$ $T_{peak} = 241.15\,\mathrm{J}$

Peak Torque Safety factor $SF\_T\_peak := \dfrac{T_p}{T\_peak_{110}}$ $\boxed{SF\_T\_peak = 2.932}$

Max continuous torque per motor $T_{cont} := \max\left(T\_cont_{110}, T\_cont_{410}\right)$ $T_{cont} = 220.164\,\mathrm{J}$

Continuous Torque Safety factor
versus Tc $SF\_T\_cont := \dfrac{T_c}{T_{cont}}$ $\boxed{SF\_T\_cont = 1.703}$

Continuous Torque Safety factor
versus Ts $SF\_T\_cont := \dfrac{T_s}{T_{cont}}$ $\boxed{SF\_T\_cont = 1.322}$

Voltage (phase to phase)
due to speed $V_N := Ku \cdot N\_max$ $\boxed{V_N = 0.548\,\mathrm{V}}$

Peak Motor line current $I_{mot\_peak} := \dfrac{T_{peak}}{Kt}$ $I_{mot\_peak} = 8.868\,\mathrm{A}$

Nominal motor line current $I_{mot} := \dfrac{T_{cont}}{Kt}$ $I_{mot} = 8.096\,\mathrm{A}$

Winding resistance at 20 °C $R_{wind\_20} := \dfrac{R_{20}}{2}$ $R_{wind\_20} = 3.145\,\Omega$

VOLTAGE CALCULATION (simplified (speed is low))

Voltage ptn due to current $V_{I\_ptn} := R_{wind\_20} \cdot I_{mot\_peak}$ $\boxed{V_{I\_ptn} = 27.89\,\mathrm{V}}$

Voltage ptp due to current $V_{I\_ptp} := \sqrt{3}\, V_{I\_ptn}$ $V_{I\_ptp} = 48.307\,\mathrm{V}$

Effective voltage (between terminals) $V_{ptp\_eff} := V_{I\_ptp} + V_N$ $V_{ptp\_eff} = 48.855\,\mathrm{V}$

Peak voltage
(to calculate bus voltage) $V_{ptp\_peak} := \sqrt{2}\,V_{ptp\_eff}$ $V_{ptp\_peak} = 69.091\,\mathrm{V}$

VOLTAGE CALCULATION (complete (ETEL Torque Motors Handbook))

Voltage due to resistance $U_r := V_{I\_ptn}$ $U_r = 27.89\,\mathrm{V}$

Voltage due to rotation speed $U_{BEMF} := \left(\frac{Ku}{\sqrt{3}}\right)\cdot N\_max$ $U_{BEMF} = 0.316\,\mathrm{V}$

Voltage due to inductance $U_L := \left(N\_max\cdot p_{mot}\right)\cdot\left(\frac{L_1}{2}\right)\cdot I_{mot\_peak}$ $U_L = 0.452\,\mathrm{V}$

Bus voltage $U_{bus} := \sqrt{\left(U_r + U_{BEMF}\right)^2 + {U_L}^2}\cdot\sqrt{6}$ $\boxed{U_{bus} = 69.1\,\mathrm{V}}$

$U_{bus} - V_{ptp\_peak} = 8.851\times10^{-3}\,\mathrm{V}$

Apparent Electrical Motor Power $P_{app\_mot\_elec} := \sqrt{3}\,\frac{U_{bus}}{\sqrt{2}}\cdot I_{mot\_peak}$ $\boxed{P_{app\_mot\_elec} = 750.502\,\mathrm{V\cdot A}}$

Peak Mechanical Motor power $P_{mot\_meca} := T_{peak}\cdot N\_max$ $\boxed{P_{mot\_meca} = 8.418\,\mathrm{W}}$

Peak Motor Dissipated power $P_{mot\_diss\_peak} := 3R_{wind\_20}\cdot {I_{mot\_peak}}^2$ $P_{mot\_diss\_peak} = 741.988\,\mathrm{W}$

Peak Electrical Motor Power $P_{mot\_elec} := P_{mot\_meca} + P_{mot\_diss\_peak}$ $P_{mot\_elec} = 750.406\,\mathrm{W}$

Motor cos (phi) $cos\_\phi := \frac{P_{mot\_elec}}{P_{app\_mot\_elec}}$ $cos\_\phi = 1$

Peak Power at drive input $P_{input} := P_{mot\_elec} + P_{drive\_diss}$ $P_{input} = 800.406\,\mathrm{W}$

Available voltage $V_{av} := V_{sup} - V_{drop\_drive}$ $V_{av} = 118.5\,\mathrm{V}$

Input current $I_{input} := \frac{P_{input}}{V_{av}}$ $I_{input} = 6.754\,\mathrm{A}$

MOTOR THERMAL DISSIPATION

Simplified Motor Dissipated power $P\_mot\_diss_1 := \frac{3}{2} R_{20} \cdot I_{mot}{}^2$ $P\_mot\_diss_1 = 618.466\,W$

Semi simplified formulae

Max. ambiant temperature $\theta_{amb} := 50 \cdot K$

Coil temperature $\theta\_coil_{110} := \theta_{amb} + \left(\frac{T_{cont}}{T_c}\right)^2 \cdot (130 - 20) \cdot K$ $\theta\_coil_{110} = 87.916\,K$

$$P\_mot\_diss\_3_{110} := \frac{3}{2} R_{20} \cdot \left[1 + \left[0.00392 \cdot \left(\frac{\theta\_coil_{110}}{K} - 20\right)\right]\right] I_{mot}{}^2 \qquad P\_mot\_diss\_3_{110} = 783.121\,W$$

Motor Dissipated power
(assuming a 130° coil t°) $P\_mot\_diss_2 := \frac{P_c}{\left(\frac{T_c}{T_{cont}}\right)^2}$ $P\_mot\_diss_2 = 1.017 \times 10^3\,W$

Most realistic case $P\_mot\_diss_{110} := P\_mot\_diss\_3_{110}$ $\boxed{P\_mot\_diss_{110} = 783.121\,W}$

Total telescope motors dissipated power

$$P\_mot\_diss_{tot} := P\_mot\_diss_{110} + P\_mot\_diss_{410} \qquad \boxed{P\_mot\_diss_{tot} = 908.333\,W}$$

We suppose a perfect exchange (see ETEL Motor Handbook)

$$\Delta Tw_{110} = 10\,K$$

We will place motors in two different circuit. Each motor cooling circuit induces a ΔTw t° elevation.

The flow goes in two channels (one right, one left)

Total water flow per circuit $F_{H2O} := \frac{P\_mot\_diss_{110}}{C_{H2O} \cdot \rho_{H2O} \cdot \Delta Tw_{110}}$ $F_{H2O} = 2.119 \times 10^{-5} \frac{m^3}{s}$ $F_{H2O} = 1.271 \frac{lit}{min}$

Pipe section $S_{pipes} := \frac{\pi \cdot dia_{pipes}{}^2}{4}$ $S_{pipes} = 132.732\,mm^2$

Water speed inside pipes $N\_H20_{pipes} := \frac{F_{H2O}}{2 S_{pipes}}$ $N\_H20_{pipes} = 0.08 \frac{m}{s}$

Reynolds number $Re_{pipes} := \frac{\left(N\_H20_{pipes} \cdot dia_{pipes}\right)}{\nu_{H20}}$ $Re_{pipes} = 902.268$

If Re < 2320: flux laminaire, > 2320: flux turbulent

Reynolds number safety factor $S_{Re\_pipes} := \frac{2320}{Re_{pipes}}$ $\boxed{S_{Re\_pipes} = 2.571}$

Water speed inside motor $N\_H20_{motor} := \frac{F_{H2O}}{S\_wc}$ $N\_H20_{motor} = 0.53\,\frac{m}{s}$

Reynolds number $Re_{motor} := \frac{(N\_H20_{motor} \cdot dia\_wc)}{\nu_{H20}}$ $Re_{motor} = 2.994 \times 10^{3}$

If Re < 2320: flux laminaire, > 2320: flux turbulent

Reynolds number safety factor $S_{Re\_motor} := \frac{2320}{Re_{motor}}$ $\boxed{S_{Re\_motor} = 0.775}$

POWER NEED

Power needs for 1 motor $P\_need := P_{mot\_meca} + P\_mot\_diss_{110}$ $P\_need = 791.539\,W$

Power input for 1 motor

We estimate an efficiency of 95 % at drive level $\eta\_drive := 95 \cdot \%$ $\eta\_drive = 0.95$

Power needed at drive input $P\_input := \frac{P\_need}{\eta\_drive}$ $P\_input = 833.199\,W$

Power dissipated per drive $P\_diss_{drive} := P\_need \cdot \frac{(1 - \eta\_drive)}{\eta\_drive}$ $P\_diss_{drive} = 41.66\,W$

BRAKE CALCULATIONS

Altitude axis

Max slewing speed $N\_max = 2\,\frac{deg}{s}$ Wind torque $T\_wind_{110} = 170.164\,J$

Inertia $J_{110} = 601.2\,kg\,m^{2}$

Kinetic energy $E\_kin_{110} := \frac{1}{2} \cdot J_{110} \cdot N\_max^{2}$ $E\_kin_{110} = 0.366\,J$

Mean brake unit force $F\_brake\_mean := mean(F\_brake\_new, F\_brake\_old)$ $\boxed{F\_brake\_mean = 679.348\,N}$

Number of units placed: $\boxed{n\_br\_unit_{110} := 4}$

Brake force for altitude $F\_brake_{110} := n\_br\_unit_{110} \cdot F\_brake\_mean$ $F\_brake_{110} = 2.717 \times 10^{3}\,N$

Braking radius $r\_br_{110} = 192\,mm$

Braking torque for altitude $T\_brake_{110} := F\_brake_{110} \cdot r\_br_{110}$ $T\_brake_{110} = 521.739\,N \cdot m$

We suppose the wind acts at the opposite of the brake, i.e. try to accelerate the telescope

Angular distance to stop $d\_stop_{110} := \dfrac{E\_kin_{110}}{(T\_brake_{110} - T\_wind_{110})}$ $d\_stop_{110} = 0.06\,deg$

Linear Distance to stop $d\_lin\_stop_{110} := d\_stop_{110} \cdot r\_br_{110}$ $d\_lin\_stop_{110} = 0.2\,mm$

Angular deceleration $dec_{110} := \dfrac{-N\_max^2}{2 \cdot d\_stop_{110}}$ $dec_{110} = -33.506\,\dfrac{deg}{s^2}$

Linear Deceleration $decc\_lin\_br_{110} := \dfrac{-(N\_max \cdot r\_br_{110})^2}{2 \cdot d\_lin\_stop_{110}}$ $decc\_lin\_br_{110} = -0.112\,\dfrac{m}{s^2}$

$decc\_lin\_br_{110} = -0.011\,g$ $T\_peak_{110} = 241.15\,J$ $T_p = 707\,J$ $T_c = 375\,J$

Angular distance to stop with axis peak torque $\dfrac{E\_kin_{110}}{(T\_brake_{110} - T\_wind_{110} - T\_peak_{110})} = 0.19\,deg$

Angular distance with motor peak torque $\dfrac{E\_kin_{110}}{(T\_brake_{110} - T\_wind_{110} - T_p)} = -0.059\,deg$

Angular distance with motor continous torque $\boxed{\dfrac{E\_kin_{110}}{(T\_brake_{110} - T\_wind_{110} - T_c)} = -0.896\,deg}$

Angular distance to stop without wind $d\_stop_{110} := \dfrac{E\_kin_{110}}{T\_brake_{110}}$ $d\_stop_{110} = 0.04\,deg$

Angular deceleration $dec_{110} := \dfrac{-N\_max^2}{2 \cdot d\_stop_{110}}$ $\boxed{dec_{110} = -49.723\,\dfrac{deg}{s^2}}$

Angular distance without motor torque
and with wind in the brake direction $\boxed{d\_stop_{110} := \dfrac{E\_kin_{110}}{(T\_brake_{110} + T\_wind_{110})}}$

$d\_stop_{110} = 0.03\,deg$

Angular deceleration without motor torque
and with wind in the brake direction $dec_{110} := \dfrac{-N\_max^2}{2 \cdot d\_stop_{110}}$ $\boxed{dec_{110} = -65.94\,\dfrac{deg}{s^2}}$

WITH 4 ACTUATORS: STOP WITH APPLICATION PEAK TORQUE + WIND
MAX DEC: 66 deg/s²

AZIMUTH CALCULATIONS (if different from altitude)

Azimuth max limit (from N in sense NESW) $Az_{max} := 275 \cdot deg$

Azimuth min mimit (from N in sense NESW) $Az_{min} := 85 \cdot deg$

AMOS INTERNAL SPECIFICATIONS

Water temperature difference allowed $\Delta Tw_{410} := 2 \cdot K$

ETEL DATA

MOTOR TMA 0450-030 3VBS with water cooling

Peak Torque $Tp_{410} := 699 \cdot N \cdot m$

Continuous Torque $Tc_{410} := 368 \cdot N \cdot m$

Stall Torque $Ts_{410} := 291 \cdot N \cdot m$

Back EMF $Ku_{410} := 9.73 \cdot V \cdot s$

Torque constant $Kt_{410} := \sqrt{3} \cdot Ku_{410}$ $Kt_{410} = 16.853 \frac{N \cdot m}{A}$

Electrical resistance (between terminals) $R20_{410} := 1.73 \cdot \Omega$

Electrical inductance (between terminals) $L1_{410} := 10.8 \cdot mH$

Continuous power dissipation $Pc_{410} := 2470 \cdot W$

Number of pair poles $p\_mot_{410} := 88$

Max. detent torque (average to peak) $Td_{410} := 4.5 \cdot N \cdot m$

Azimuth bearing Rollix 88-0550-01

Diameter $\text{dia\_bearing}_{410} := 550 \cdot \text{mm}$

Friction torque $\text{T\_bearing}_{410\_Rollix} := 80 \cdot \text{N} \cdot \text{m}$ unloaded catalog value (measured: 30 Nm)

Azimuth braking radius $\text{r\_br}_{410} := \left(\frac{527}{2} - 33 \right) \cdot \text{mm}$ $\text{r\_br}_{410} = 230.5\,\text{mm}$

Azimuth axis (410)

Detent torque (%) $\text{Td}_{\%410} := \frac{\text{Td}_{410}}{\text{Tc}_{410}}$ $\text{Td}_{\%410} = 1.223\,\%$

Inertia moment (Fork+tube
+ M4-M5 structure at horizon) $J_{410} := 7.27 \cdot 10^{2} \cdot \text{kg} \cdot \text{m}^{2}$ $J_{410} = 727\,\text{kg}\,\text{m}^{2}$

Fork mass $m_{410} := 1139 \cdot \text{kg}$ $m_{410} = 1.139 \times 10^{3}\,\text{kg}$

Azimuth axis (410)

Tube + Fork weight	$w_{410} := \left(m_{110} + m_{410}\right) \cdot g$	$w_{410} = 2.124 \times 10^{4}\ \mathrm{N}$
Bearing friction force	$F\_fr\_be_{410} := w_{410} \cdot \mu$	$F\_fr\_be_{410} = 212.412\ \mathrm{N}$
Bearing friction torque	$T\_bearing_{410} := F\_fr\_be_{410} \cdot \dfrac{dia\_bearing_{410}}{2}$	$T\_bearing_{410} = 58.413\ \mathrm{J}$
Estimated bearing friction torque	$T\_bearing_{410} := \max\left(T\_bearing_{410}, T\_bearing_{410\_Rollix}\right)$	
		$\boxed{T\_bearing_{410} = 80\ \mathrm{N \cdot m}}$

Azimuth calculations

Inertia torque	$T\_inertia_{410} := J_{410} \cdot a\_max$	$\boxed{T\_inertia_{410} = 25.377\ \mathrm{N \cdot m}}$
	$r\_bearing_{410} := \dfrac{dia\_bearing_{410}}{2}$	$r\_bearing_{410} = 275\ \mathrm{mm}$
Surface seen by the wind	$S\_wind_{410} := 1400 \cdot (900 + 850) \cdot \mathrm{mm}^{2}$	$S\_wind_{410} = 2.45\ \mathrm{m}^{2}$
Mean wind torque	$F\_wind_{410} := P\_mean \cdot S\_wind_{410} \cdot \dfrac{r\_wind_{110}}{r\_bearing_{410}}$	$\boxed{F\_wind_{410} = 1.038 \times 10^{3}\ \mathrm{N}}$
Wind force on bearing	$F\_wind\_be_{410} := F\_wind_{410} \cdot \mu$	$F\_wind\_be_{410} = 10.384\ \mathrm{N}$
Wind torque on bearing	$T\_wind_{410} := F\_wind\_be_{410} \cdot r\_bearing_{410}$	$\boxed{T\_wind_{410} = 2.856\ \mathrm{N \cdot m}}$
Max continuous torque	$T\_cont_{410} := T\_wind_{410} + T\_bearing_{410}$	$\boxed{T\_cont_{410} = 82.856\ \mathrm{N \cdot m}}$

Peak torque $\mathrm{T\_peak}_{410} := \mathrm{T\_inertia}_{410} + \mathrm{T\_wind}_{410} + \mathrm{T\_bearing}_{410}$ $\boxed{\mathrm{T\_peak}_{410} = 108.233\ \mathrm{N \cdot m}}$

Motor frequency $\mathrm{f\_mot}_{410} := \mathrm{N\_nom} \cdot \mathrm{p\_mot}_{410}$ $\boxed{\mathrm{f\_mot}_{410} = 1.536\ \mathrm{Hz}}$

We are in stall conditions when motor frequency is < 1 Hz.

Peak Torque Safety factor $\mathrm{SF\_T\_peak}_{410} := \dfrac{\mathrm{Tp}_{410}}{\mathrm{T\_peak}_{410}}$ $\boxed{\mathrm{SF\_T\_peak}_{410} = 6.458}$

Continuous Torque Safety factor versus Tc $\mathrm{SF\_T\_cont}_{410} := \dfrac{\mathrm{Tc}_{410}}{\mathrm{T\_cont}_{410}}$ $\boxed{\mathrm{SF\_T\_cont}_{410} = 4.441}$

Continuous Torque Safety factor versus Ts $\mathrm{SF\_T\_cont}_{410} := \dfrac{\mathrm{Ts}_{410}}{\mathrm{T\_cont}_{410}}$ $\boxed{\mathrm{SF\_T\_cont}_{410} = 3.512}$

Voltage (phase to phase)
due to speed $\mathrm{V\_N}_{410} := \mathrm{Ku}_{410} \cdot \mathrm{N\_max}$ $\boxed{\mathrm{V\_N}_{410} = 0.34\ \mathrm{V}}$

Peak Motor line current $\mathrm{I\_mot\_peak}_{410} := \dfrac{\mathrm{T\_peak}_{410}}{\mathrm{Kt}_{410}}$ $\mathrm{I\_mot\_peak}_{410} = 6.422\ \mathrm{A}$

Nominal motor line current $\mathrm{Imot}_{410} := \dfrac{\mathrm{T\_cont}_{410}}{\mathrm{Kt}_{410}}$ $\mathrm{Imot}_{410} = 4.916\ \mathrm{A}$

Winding resistance at 20 °C $\mathrm{R\_wind\_20}_{410} := \dfrac{\mathrm{R20}_{410}}{2}$ $\mathrm{R\_wind\_20}_{410} = 0.865\ \Omega$

VOLTAGE CALCULATION (simplified (speed is low))

Voltage ptn due to current $\mathrm{V\_I}_{\mathrm{ptn\_410}} := \mathrm{R\_wind\_20}_{410} \cdot \mathrm{I\_mot\_peak}_{410}$ $\boxed{\mathrm{V\_I}_{\mathrm{ptn\_410}} = 5.555\ \mathrm{V}}$

Voltage ptp due to current $\mathrm{V\_I\_ptp}_{410} := \sqrt{3}\,\mathrm{V\_I}_{\mathrm{ptn\_410}}$ $\mathrm{V\_I\_ptp}_{410} = 9.622\ \mathrm{V}$

Effective voltage (between terminals) $V\_ptp\_eff_{410} := V\_I\_ptp_{410} + V\_N_{410}$ $V\_ptp\_eff_{410} = 9.962\,V$

Peak voltage
(to calculate bus voltage) $V\_ptp\_peak_{410} := \sqrt{2}\,V\_ptp\_eff_{410}$ $V\_ptp\_peak_{410} = 14.088\,V$

VOLTAGE CALCULATION (complete (ETEL Torque Motors Handbook))

Voltage due to resistance $Ur_{410} := V\_I_{ptn\_410}$ $Ur_{410} = 5.555\,V$

Voltage due to rotation speed $U\_BEMF_{410} := \left(\frac{Ku_{410}}{\sqrt{3}}\right)\cdot N\_max$ $U\_BEMF_{410} = 0.196\,V$

Voltage due to inductance $UL_{410} := \left(N\_max\cdot p\_mot_{410}\right)\cdot\left(\frac{L1_{410}}{2}\right)\cdot I\_mot\_peak_{410}$

$UL_{410} = 0.107\,V$

Bus voltage $Ubus_{410} := \sqrt{\left(Ur_{410} + U\_BEMF_{410}\right)^2 + UL_{410}{}^2}\cdot\sqrt{6}$ $\boxed{Ubus_{410} = 14.09\,V}$

Peak Mechanical Motor power $Pmot\_meca_{410} := T\_peak_{410}\cdot N\_max$ $\boxed{Pmot\_meca_{410} = 3.778\,W}$

MOTOR THERMAL DISSIPATION

Simplified Motor Dissipated power $P\_mot\_diss_{1\_410} := \frac{3}{2} R20_{410} \cdot Imot_{410}^{2}$ $P\_mot\_diss_{1\_410} = 62.724\,W$

Semi simplified formulae

Max. ambiant temperature $\theta_{amb} := 50 \cdot K$

Coil temperature $\theta\_coil_{410} := \theta_{amb} + \left(\frac{T\_cont_{410}}{Tc_{410}}\right)^{2} \cdot (130 - 20) \cdot K$ $\theta\_coil_{410} = 55.576\,K$

$P\_mot\_diss\_3_{410} := \frac{3}{2} R20_{410} \cdot \left[1 + \left[0.00392 \cdot \left(\frac{\theta\_coil_{410}}{K} - 20\right)\right]\right] Imot_{410}^{2}$ $P\_mot\_diss\_3_{410} = 71.472\,W$

Motor Dissipated power $P\_mot\_diss_{2\_410} := \frac{Pc_{410}}{\left(\frac{Tc_{410}}{T\_cont_{410}}\right)^{2}}$ $P\_mot\_diss_{2\_410} = 125.212\,W$

Worst case $P\_mot\_diss_{410} := \max\left(P\_mot\_diss_{1\_410}, P\_mot\_diss_{2\_410}\right)$ $\boxed{P\_mot\_diss_{410} = 125.212\,W}$

$\Delta Tw_{410} = 2\,K$

Total water flow per circuit $F\_H2O_{410} := \frac{P\_mot\_diss_{410}}{C_{H2O} \cdot \rho_{H2O} \cdot \Delta Tw_{410}}$ $F\_H2O_{410} = 1.694 \times 10^{-5} \frac{m^{3}}{s}$

$F\_H2O_{410} = 1.016 \frac{lit}{min}$

Pipe section $S_{pipes} := \frac{\pi \cdot dia_{pipes}^{2}}{4}$ $S_{pipes} = 132.732\,mm^{2}$

Water speed inside pipes $N\_H20\_pipes_{410} := \frac{F\_H2O_{410}}{2S_{pipes}}$ $N\_H20\_pipes_{410} = 0.064 \frac{m}{s}$

Reynolds number $Re\_pipes_{410} := \frac{\left(N\_H20\_pipes_{410} \cdot dia_{pipes}\right)}{\nu_{H20}}$ $Re\_pipes_{410} = 721.312$

If Re < 2320: flux laminaire, > 2320: flux turbulent

Reynolds number safety factor $S_{Re\_pipes\_410} := \dfrac{2320}{Re\_pipes_{410}}$ $\boxed{S_{Re\_pipes\_410} = 3.216}$

Water speed inside motor $N\_H20\_motor_{410} := \dfrac{F\_H2O_{410}}{S\_wc}$ $N\_H20\_motor_{410} = 0.423\,\dfrac{m}{s}$

Reynolds number $Re\_motor_{410} := \dfrac{\left(N\_H20\_motor_{410} \cdot dia\_wc\right)}{\nu_{H20}}$ $Re\_motor_{410} = 2.394 \times 10^{3}$

If Re < 2320: flux laminaire, > 2320: flux turbulent

Reynolds number safety factor $S_{Re\_motor\_410} := \dfrac{2320}{Re\_motor_{410}}$ $\boxed{S_{Re\_motor\_410} = 0.969}$

Power needs for 1 motor $P\_need_{410} := Pmot\_meca_{410} + P\_mot\_diss_{410}$ $P\_need_{410} = 128.99\,W$

Power needed at drive input $P\_input_{410} := \dfrac{P\_need_{410}}{\eta\_drive}$ $P\_input_{410} = 135.779\,W$

Power dissipated per drive $P\_diss\_drive_{410} := P\_need_{410} \cdot \dfrac{\left(1 - \eta\_drive\right)}{\eta\_drive}$ $P\_diss\_drive_{410} = 6.789\,W$

BRAKE CALCULATIONS

Azimuth axis

Max slewing speed $N\_max = 2\,\dfrac{deg}{s}$ Wind torque $T\_wind_{410} = 2.856\,J$

Inertia $J_{410} = 727\,kg\,m^{2}$

Kinetic energy $E\_kin_{410} := \dfrac{1}{2} \cdot J_{410} \cdot N\_max^{2}$ $E\_kin_{410} = 0.443\,J$

Number of units placed: $\boxed{n\_br\_unit_{410} := 7}$

Brake force for altitude $F\_brake_{410} := n\_br\_unit_{410} \cdot F\_brake\_mean$ $F\_brake_{410} = 4.755 \times 10^{3}\,N$

Braking radius $r\_br_{410} = 230.5\,mm$

Braking torque for altitude $T\_brake_{410} := F\_brake_{410} \cdot r\_br_{410}$ $T\_brake_{410} = 1.096 \times 10^{3}\,N \cdot m$

We suppose the wind acts at the opposite of the brake, i.e. try to accelerate the telescope

Angular distance to stop $d\_stop_{410} := \frac{E\_kin_{410}}{\left(T\_brake_{410} - T\_wind_{410}\right)}$ $d\_stop_{410} = 0.023\,\mathrm{deg}$

Linear Distance to stop $d\_lin\_stop_{410} := d\_stop_{410} \cdot r\_br_{410}$ $d\_lin\_stop_{410} = 0.093\,\mathrm{mm}$

Angular deceleration $dec_{410} := \frac{-N\_max^2}{2 \cdot d\_stop_{410}}$ $dec_{410} = -86.162\,\frac{\mathrm{deg}}{\mathrm{s}^2}$

Linear Deceleration $decc\_lin\_br_{410} := \frac{-\left(N\_max \cdot r\_br_{410}\right)^2}{2 \cdot d\_lin\_stop_{410}}$ $decc\_lin\_br_{410} = -0.347\,\frac{\mathrm{m}}{\mathrm{s}^2}$

$decc\_lin\_br_{410} = -0.035\,\mathrm{g}$ $T\_peak_{410} = 108.233\,\mathrm{J}$ $Tp_{410} = 699\,\mathrm{J}$ $Tc_{410} = 368\,\mathrm{J}$

Angular distance to stop with axis peak torque $\frac{E\_kin_{410}}{\left(T\_brake_{410} - T\_wind_{410} - T\_peak_{410}\right)} = 0.026\,\mathrm{deg}$

Angular distance with motor peak torque $\frac{E\_kin_{410}}{\left(T\_brake_{410} - T\_wind_{410} - Tp_{410}\right)} = 0.064\,\mathrm{deg}$

Angular distance with motor continous torque $\boxed{\frac{E\_kin_{410}}{\left(T\_brake_{410} - T\_wind_{410} - Tc_{410}\right)} = 0.035\,\mathrm{deg}}$

Angular distance to stop without wind $d\_stop_{410} := \frac{E\_kin_{410}}{T\_brake_{410}}$ $d\_stop_{410} = 0.023\,\mathrm{deg}$

Angular deceleration $dec_{410} := \frac{-N\_max^2}{2 \cdot d\_stop_{410}}$ $\boxed{dec_{410} = -86.387\,\frac{\mathrm{deg}}{\mathrm{s}^2}}$

Angular distance without motor torque and with wind in the brake direction $\boxed{d\_stop_{410} := \frac{E\_kin_{410}}{\left(T\_brake_{410} + T\_wind_{410}\right)}}$

$d\_stop_{410} = 0.023\,\mathrm{deg}$

Angular deceleration without motor torque and with wind in the brake direction $dec_{410} := \frac{-N\_max^2}{2 \cdot d\_stop_{410}}$ $\boxed{dec_{410} = -86.612\,\frac{\mathrm{deg}}{\mathrm{s}^2}}$

WITH 7 ACTUATORS: STOP THE TELESCOPE IN ALL CONDITIONS
MAX DEC: 86.6 deg/s²

S.A. AMOS
ADVANCED MECHANICAL AND OPTICAL SYSTEMS

LLOYD'S REGISTER QUALITY ASSURANCE · ISO9001
UKAS QUALITY MANAGEMENT 001

MULTI-APPLICATION SOLAR TELESCOPE

COMPLIANCE MATRIX (PDR ISSUE)

[CONTRACT NO: PRUS20060004600101 FE]

Doc. nr :	AMOS/1967/30/05
Issue :	1.A
Date :	13/07/07

	NAME	DATE	SIGNATURE
Prepared by	Stefan DENIS	13/07/07	Stefan Denis
Checked by	Pierre GLOESENER	13/07/07	
Released by	Stefan DENIS	13/07/07	Stefan Denis

DISTRIBUTION LIST

Name	Company	Quantity
Archives	AMOS	original
Stefan DENIS	AMOS	1 copy
Prof. P. VENKATAKRISHNAN	PRL/USO	1 copy

CHANGE RECORD

ISSUE	DATE	NB OF PAGES	MODIFIED PAGES	REMARKS
1.0	13/07/07	15	initial issue	

TABLE OF CONTENTS

1. APPLICABLE & REFERENCE DOCUMENTS

Applicable and reference documents are defined here below. This includes documents and drawings.

1.1 APPLICABLE DOCUMENTS

ITEM	*TITLE*	*REFERENCE*	*ISSUE*	*DATE*
AD01	*Tender Specification [PRL/04/05-06]*	*1967/03/01*	-	*22/12/05*
AD02	*User Requirements*	*1967/03/02*	-	-
AD03	*MAST Technical Proposal (AMOS)*	*D1660/technical*	*2.0*	*19/05/06*
AD04	*Compliance Matrix (revised)*	-	-	*01/06/06*

1.2 REFERENCE DOCUMENTS

ITEM	*TITLE*	*REFERENCE*	*ISSUE*	*DATE*
RD01	*Preliminary Optical Design Report*	*1967/30/01*	*1.A*	*13/07/07*
RD02	*Preliminary Mechanical Design Report*	*1967/30/02*	*1.A*	*13/07/07*
RD03	*Preliminary Thermal Design Report*	*1967/30/03*	*1.A*	*13/07/07*
RD04	*Preliminary Electrical Design Report*	*1967/30/04*	*1.A*	*13/07/07*
RD05	*Compliance Matrix (PDR issue)*	*1967/30/05*	*1.A*	*13/07/07*
RD06	*Preliminary TCS Design Report [OSL]*	*1967/30/06*	*1.A*	*13/07/07*
RD07	*Main Performance Analyses & Error Budgets*	*1967/01/10*	*1.A*	*13/07/07*

1.3 REFERENCE DRAWINGS

ITEM	*TITLE*	*REFERENCE*	*ISSUE*	*DATE*
DWG01	*General View*	*1967-00-00-00*	*A*	*13/07/07*
DWG02	*Building Interfaces*	*1967-00-00-90*	*A*	*13/07/07*
DWG03	*Polarimeter Interfaces*	*1967-10-00-90*	*A*	*13/07/07*
DWG04	*Tube General Assembly*	*1967-10-00-00*	*A*	*13/07/07*
DWG05	*Fork General Assembly*	*1967-20-00-00*	*A*	*13/07/07*
DWG06	*Ground Interface General Assembly*	*1967-30-00-00*	*A*	*13/07/07*

2. ACRONYMS

ACE	:	Air-Conditioned Environment
AD	:	Applicable Document
Alt.	:	Altitude (axis)
Alt-Az.	:	Altitude-Azimuth (mount)
AMOS	:	Advanced Mechanical & Optical Systems
Az.	:	Azimuth (axis)
C	:	Compliant
DDR	:	Detailed Design Review
DWG	:	Drawing
FFOV	:	Full Field Of View
FOV	:	Field Of View
H/W	:	Hardware
HS	:	Heat Stop
I/F	:	Interface(s)
K-O	:	Kick-Off
MAST	:	Multi-Application Solar Telescope
mNC	:	marginally Non-Compliant
N/A	:	Not Applicable
NC	:	Non-Compliant
NFOV	:	Null Field Of View (= centre of the field)
OSL	:	Observatory Science Ltd.
PDR	:	Preliminary Design Review
pNC	:	partially Non-Compliant
PP	:	Polarimeter Package
PRL	:	Physical Research Laboratory (Govt. of India)
PTV	:	Peak-To-Valley
RD	:	Reference Document
RMS	:	Root Mean Square
RSS	:	Root Sum Square
S/W	:	Software
TBA	:	To Be Approved (by PRL/USO)
TBC	:	To Be Confirmed (by AMOS)
TBD	:	To Be Defined (by AMOS or PRL/USO)
TCS	:	Telescope Control System
USO	:	Udaipur Solar Observatory (PRL – Govt. of India)
WFE	:	WaveFront Error
WFS	:	WaveFront Sensor

3. SCOPE

This document forms a part of the analysis of the preliminary design done by AMOS for the MAST project. It provides a compliance status of the telescope's design with respect to specifications at PDR level.

This document should be considered as a living document. This preliminary design issue should nevertheless correspond to the commitment of AMOS with respect to all the specifications (including the "detailed" specification from [AD02]).

4. TELESCOPE DESIGN OVERVIEW

The Multi-Application Solar Telescope (MAST) is a 50 cm diameter class telescope to be installed on the USO island on the lake Fatehsagar in Udaipur, India. It is dedicated to solar observation.

The telescope is designed, manufactured, assembled and installed on-site by AMOS. It will be installed on the upper floor of the main existing building. Some appointments of the existing pier, dome and 2nd floor will be necessary for that purpose. Moreover, some additional equipment will be required on-site for proper operation of the telescope.

An overview of the MAST design outlines 3 categories of design elements that drive the structure of the document:

- the *telescope structure*, including the tube, fork and ground interface parts;
- the *mirror units*, including the primary mirror, the secondary mirror and the tertiary mirror units, the Coudé optics unit, the field derotator unit, the back-end folding unit, and the wavefront sensor pick-off unit;
- the *auxiliary equipment*, including a M1 cover and a M1 flushing system, the heat stop, an output pupil stop, a guider telescope, a wavefront sensor, the altitude and azimuth cable-wraps.

The implantation of the telescope in the existing building and the interfaces with the PRL/USO equipment and site also forms an important part of the design.

All the above mentioned design elements concern several aspects of the design:

- the optical design;
- the mechanical design;
- the thermal design;
- the electrical design.

Each of these design aspects is detailed in a separate document (see [RD01] to [RD04], as well as [RD06] for more design details).

5. COMPLIANCE WITH TENDER SPECIFICATION

The following matrix provides the compliance status with respect to the Tender Specification [AD01] (Technical Specifications - §.3 of [AD01]). It should be considered as an update of the compliance matrix [AD04] provided along with the proposal [AD03]. Whenever required, a note comments the compliance status.

Compliance status can take the following values:

- C: Compliant
    - *meaning that the requirement should be fulfilled*
- mNC: marginally Non-Compliant
    - *meaning that the requirement should be almost fulfilled*
- pNC: partially Non-Compliant
    - *meaning that only part of the requirement should be fulfilled*
- NC: Non-Compliant
    - *meaning that the requirement is not expected to be fulfilled*
- N/A: Not Applicable
    - *meaning that the requirement is not to be considered anymore (specification not up-to-date)*

REF.	SPEC. TITLE	REQUIREMENT	STATUS	NOTE
3.1 System Specifications				
3.1 (a)	Input Beam Size	50 cm (clear aperture)	C	
3.1 (b)	Output Beam Size	10 to 12 cm (with 6 arcmin FOV)	NC	1
3.1 (c)	Output Wavefront Error (at 633 nm)	$\lambda/12$ rms on-axis	C	
		$\lambda/10$ rms over field of view	C	
		$\lambda/4$ ptv	C	
3.1 (d)	Output Beam Stray-Light	irradiance ≤ 0,2 % solar flux	C	2
3.1 (e)	FOV Stationarity	max. movement ≤ 0,01 arcsec /min	C	3
3.1 (f)	Vibration of Output Beam	≤ 1 arcsec for freq. in [0 – 1] Hz	C	4
		≤ 0,5 arcsec for freq. in [1 – 10] Hz	C	
		≤ 0,0,5 arcsec for freq. > 10 Hz	C	
3.1 (g)	System Length (M2 – M3)	≤ 2 m	C	
3.1 (h)	System Height (elevation – output)	≤ 2 m	C	
3.1 (i)	Total Transmission	≥ 50 % in [400 – 900] nm range	C	
3.2 Subsystems Specifications				
3.2.1 Intermediate Collimated Output Beam (Polarimeter allowance)[5]				
3.2.1 (a)	Size (at polarimeter level)	≤ 5 cm – modified to: 5 to 6 cm	C	6
3.2.1 (b)	Wavefront Error (polarimeter level)	same as at output level	C	
3.2.1 (c)	Mueller Matrix (polarization status)	(Mueller matrix)	N/A	
3.2.1 (d)	Stray-Light (polarimeter level)	same as at output level	C	7
3.2.1 (e)	Polarimeter Package Volume	Ø 10 cm x 15 cm modified to: 13 x 20 x 15 cm^3	C	

---

[1] refer to detailed discussion in [RD01]
[2] to be confirmed by stray-light analysis during detailed design phase
[3] to be confirmed during detailed design phase
[4] to be confirmed during detailed design phase
[5] this part mainly refer to obsolete initial on-axis optical design sketched in obsolete (not applicable) figure in [AD01]
[6] refer to detailed discussion in [RD01]
[7] to be confirmed by stray-light analysis during detailed design phase

Ref.	**Spec. Title**	**Requirement**	**Status**	**Note**
3.2.2 Optical Components				
3.2.2 (a)	M1 Material	ULE (or equivalent like ZERODUR®)	C	
3.2.2 (b)	Other Mirrors Material	SiC	C	[8]
3.2.2 (c)	Mirrors Surface Accuracy	λ/50 rms (at 632,8 nm) λ/4 ptv (at 632,8 nm) Rq ≤ 2 nm rms (microroughness)	C C C	
3.2.2 (d)	Mirrors Coatings Reflectivity	R ≥ 95 % in [400 – 900] nm range Rq ≤ 2 nm rms (with coating)	C C	
3.2.2 (e)	Mirrors Coatings Absorption	≤ 10 % incident solar flux	C	
3.2.2 (f)	M1 Front Surface Temperature	± 1°C with respect to ambient	C	[9]
3.2.2 (g)	M1 Airflow	1 m/s to 1,5 m/s across front surface	C	
3.2.2 (h)	Other Mirrors Temperature	± 0,5°C with respect to ambient	C	[10]
3.2.3 Mechanical Assembly				
3.2.3 (a)	Mechanical Mount Type	Alt.-Az. mount	C	
3.2.3 (b)	Azimuth Limits	[85° - 275°] from North (NESW)	C	
3.2.3 (c)	Altitude Limits	[5° - 88,5°] (3° zenithal avoidance)	C	
3.2.3 (d)	Mechanical Parts Temperature	± 1°C with respect to ambient	C	[11]
3.2.4 Drive System				
3.2.4 (a)	Pointing Accuracy	≤ 10 arcsec	C	
3.2.4 (b)	Differential Pointing Accuracy	≤ 0,5 arcsec	C	[12]
3.2.4 (c)	Open-Loop Tracking	≤ 0,25 arcsec rms over 10 min ≤ 0,05 arcsec rms for 1 s	pNC	[13]
3.2.4 (d)	Closed-Loop Tracking	≤ 0,1 arcsec for 1 hour	C	[14]
3.2.4 (e)	M2 Mechanism	tip-tilt or active optics system	C	

---

[8] this does not concern mirrors in Air-Controlled Environment, which proposed material is Zerodur® instead of SiC, without loss of coherence with the global specification

[9] front surface colder than ambient is supposed not to impact seriously the seeing – effort put on limiting temperature hotter than ambient

[10] front surface colder than ambient is supposed not to impact seriously the seeing – effort put on limiting temperature hotter than ambient

[11] limited to parts close to optical beam or that could affect seeing

[12] for differential pointing within 1,5 times the solar disk diameter

[13] refer to [RD06]

[14] compliance expected but non-compliance still possible – will require more detailed analysis

REF.	**SPEC. TITLE**	**REQUIREMENT**	**STATUS**	**NOTE**
3.2.5 Environment Parameters & Operating Conditions				
3.2.5 (a)	Operational Environment	10°C ≤ T° ≤ 50°C 0 % ≤ RH ≤ 90 % wind speed ≤ 30 km/h	C C C	
3.2.5 (b)	UPS	30 min backup time 220 ± 20 V ; 50 ± 2 Hz	C C	
3.2.5 (c)	Telescope Location	USO island site – existing pier	C	[15]
3.2.5 (d)	Telescope Control System	TCS is part of deliverables	C	

---

[15] requiring some pier and building appointments (acknowledged philosophy)

6. COMPLIANCE WITH USER REQUIREMENTS

The following matrix provides the compliance status with respect to the User Requirements Specification [AD02]. The latter had not been considered explicitly for the proposal [AD03]. Whenever required, a note comments the compliance status.

Main requirements from [AD02] are already part of [AD01] and are considered in the corresponding compliance matrix above (§.5). Most of remaining requirements from [AD02], which are not part of [AD01], concern TCS-related aspects. A compliance matrix dedicated to TCS aspects is already part of the TCS Preliminary Design Report [RD06]. One should refer to this one whenever it is relevant.

Compliance status can take the following values:

- C: Compliant
  - *meaning that the requirement should be fulfilled*
- mNC: marginally Non-Compliant
  - *meaning that the requirement should be almost fulfilled*
- pNC: partially Non-Compliant
  - *meaning that only part of the requirement should be fulfilled*
- NC: Non-Compliant
  - *meaning that the requirement is not expected to be fulfilled*
- N/A: Not Applicable
  - *meaning that the requirement is not to be considered anymore (specification not up-to-date)*

REF.	**SPEC. TITLE**	**REQUIREMENT**	**STATUS**	**NOTE**
II. Constraints				
	Environmental Constraints	located on lake Fatehsagar 300 m altitude above sea level 10°C ≤ T° ≤ 30°C (winter) 20°C ≤ T° ≤ 50°C (summer) RH typ. 40 % ; up to 90 % (occasionally) wind speed up to 30 km/h (max.) low damage risk zone (seismic zone II)	C C C C C C C	
5.	International Safety Regulations	CE marked	C	
III. Safety Requirements				
6.	Safety Requirements	safe operation oriented design safe operation in responsibility of PRL	C C	
7.1	Telescope Interlocks	telescope motion stopped by interlock	C	
7.2	Interlock System	PRL responsible for interlock use	C	
7.3	Input Verification	verification of requests and data by TCS	C	
7.4	Error Logging	logging and propagation of errors	C	[16]
7.5	Mains Supply	UPS ensured by PRL (5 min warning) telescope in safe state within 5 min	C C	
7.6	Start-Up after Failure	manual safe reset of telescope	C	
IV. Scientific Requirements				
8.1 to 12.4 and 12.6 to 13.3		refer to Tender Specification's compliance matrix (§.5)		
12.5	Maximum Slewing Speed	slewing speed ≤ 2 °/s max. (Alt. & Az.)	C	
14.1	Mean Time To Failure	MTTF ≥ 2000 h	C	[17]
14.2	Mean Time To Repair	MTTR ≤ 4 h	C	[18]
15.	Thermal Output	heat dissipation ≤ 1 kW (vicinity) heat dissipation ≤ 300 W (telescope)	C C	
16.	Telescope Enclosure	enclosure of PRL responsibility i/f requirement document to generate	C TBD	 [19]

---

[16] TCS being considered as the subsystem, with continuous logging at this level, propagation to OCS (higher level) on request, and broadcast of error messages occurring during operation

[17] compliance expected at this preliminary design level – not guaranteed

[18] not accounting availability of spare parts

[19] preliminary interface requirements are part of the PDR documentation package

REF.	SPEC. TITLE	REQUIREMENT	STATUS	NOTE
V. Operational Requirements				
this part of the compliance matrix refers to information given in [RD06]				
17.	Operating Modes	2 control modes (engineering, user)	C	[20]
17.1	Disabling Telescope Control	lockout physical switch with status	C	
17.2	Local Engineering Control	control in local engineering mode	C	
17.3	Enabling Engineering Control	engineering mode switch + status	C	
17.4	Local & Remote Interactive Control	dual safe telescope control in user mode	C	
17.5	Change of Operating Mode	control mode change without shutdown	C	
17.6	Changeover Procedures	authorization control of mode switch	C	
17.7	Duration of Changeover	mode switch duration ≤ 5 min	C	
18.	Access to the Control System			
18.1	System User Access	protection from unauthorised access	C	
18.2	Local Access for Eng. Status	local on-line access to eng. status	C	
18.3	Remote Access for Eng. Status	remote on-line access to eng. status	C	
18.4	Software Engineering Access	on-line access to control s/w	C	
18.5	Super User Access	TCS tuning parameter access to authorised users	C	[21]
19.	Status Information and Alarms			
19.1	Error Trapping & Reporting	fault tolerant software with reporting	C	
19.2	Error Handling	graceful software failures handling	C	
19.3	Logging of Errors and Status	logging of errors and status changes	C	
19.4	Status Alarms	visual + audible alarm system on fault	mNC	[22]
19.5	Telescope Status & User Interface	safe & visible status design-oriented UI	C	
20.	Engineering Mode of Operation			
20.1	Engineering Interface Access	access to local & authorised remote eng. i/f for authorised users	C	
20.2	Information Monitoring	monitoring of encoders, signal lines, and PSU voltage by eng. i/f	C	
20.3	Local Parameter Modification	local setting of predefined parameters	C	
21.	Interactive Mode of Operation			
21.1	Interactive Mode User Interface	UI with both command line and GUI	C	

---

[20] original requirement for 3 modes (+ super-user mode) amended by e-mail from USO/PRL, dated 11 May 2007

[21] transferred to engineering mode permission, as amended by e-mail from USO/PRL, dated 11 May 2007

[22] audible alarms usually not suitable and disabled by users - refer to [RD06] for detailed considerations

REF.	**SPEC. TITLE**	**REQUIREMENT**	**STATUS**	**NOTE**
VI. Telescope Control Requirements				
this part of the compliance matrix refers to information given in [RD06]				
22.	Telescope System			
22.1	Control of Power	dual manual & computer controlled operation of power system	NC	[23]
22.2	Power Monitoring	monitoring & log of power parameters	C	
22.3	Power Safety	carrying safety actions if required	C	
22.4	Alteration of Limits Setting	hardware or on-site only software alteration of ultimate limits	C	
22.5	Hardware Limits Recovery	recovery from hardware limits limited to human intervention	C	
22.6	Software Limits Recovery	recovery from software limits possible remotely from authorised users	C	
23.	Telescope Control System (TCS)			
23.1	TCS General Requirements	primary TCS responsibility	C	
23.2	TCS Computer	stable OS & fully equipped TCS PC	C	
23.4	Position & Status Information	information available to other systems	C	
23.5	TCS Software	software UI for control functions source code & documentation GUI required	C pNC C	 [24]
24.	TCS Interfacing to Other Systems	TCS i/f with PRL's OCS required	C	
25.	TCS Co-ordinates			
25.1	Co-ordinate Entry	RA & DEC handled by TCS	C	
25.2	Non Sidereal Tracking Rates	non-sidereal tracking rates in RA & DEC handled by TCS	C	
25.3	Rotator Position Angle	position handled in position on the sky or in Alt.-Az. mount position angles	C	
25.4	Rotator Zero Point	zero setting by authorised user	C	
25.5	Arbitrary Rotator Position Mode	'floating' position setting	N/A	[25]
25.6	Altitude and Azimuth	Alt.-Az. setting	C	

---

[23] existing computer switchable power supplies not foreseen by [AD03] - refer to [RD06] for details

[24] code provided in both source code and compiled format except for third party libraries, which are only available in compiled form

[25] removed requirement according to e-mail from USO/PRL, dated 11 May 2007

Ref.	**Spec. Title**	**Requirement**	**Status**	**Note**
26.	Pointing Model			
26.1	Zeroset	start-of-day zeroset routine (Almanac)	C	
26.2	Start-of-Day Pointing Calibration	automatic start-of-day pointing model calibration routine	C	[26]
26.3	Basic Pointing Model Adjustment	adjustable basic pointing parameters	C	
26.4	Logging of Calibration Data	logging for manual pointing calibration	C	
26.5	Detailed Pointing Model Adjustment	non-basic pointing parameters alterable by authorised user	C	
27.	Slews & Offsets			
27.1	Keypad	keypad-like i/f for slewing in RA/DEC	C	
27.2	Offset Accuracy	offset during open-loop tracking	pNC	[27]
27.3	Offset Modes	tangent plane and RA/DEC offsets	C	
27.4	Offset Timing	offset stabilisation time: ≤ 2 s for 1 arcmin offset ≤5 s for 5 arcmin offset	C	
28.	Telescope Status Display			
28.1	Telescope Status Update	1 Hz status display auto-update	C	
28.2	Display Information	list of status information to be displayed	C	[28]
29.	Time			
29.1	Time Distribution	UT & LST served by TCS on LAN with accuracy of 1 s rms	C	
VII. Documentation				
30.	User Documentation	complete set of user documentation (printed + CD-ROM)	C	
30.1	Engineering Support Doc.	engineering support documentation	C	
30.2	Scheduled Maintenance Doc.	scheduled maintenance documentation	C	[29]
30.3	Design Doc.	interface and assembly drawings	C	

---

[26] this start-of-day, sun-oriented, pointing model calibration (or check) routine will be available in addition to possible pointing model's calibration routines on stars at night

[27] this requirement is not well understood: it would be expected to require the 0,5 arcsec differential pointing accuracy

[28] refer to [AD02] for the list of status information to be displayed

[29] maintenance not included in existing contract

MULTI APPLICATION SOLAR TELESCOPE

FOR

UDAIPUR SOLAR OBSERVATORY INDIA

Entire system : FEM analyses

Doc. nr : AMOS/1967/01/08

Issue : 3

Date : 13th July 2007

	NAME	DATE	SIGNATURE
Prepared by	F. GRAILLET	13/07/07	
Checked by	J-M. SCHUMACHER / C. DELREZ		
Released by	S. DENIS		

DISTRIBUTION LIST

Name	Company	Quantity
Archives	AMOS	original

CHANGE RECORD

ISSUE	DATE	NB OF PAGES	MODIFIED PAGES	REMARKS
1	21/05/07	19		Initial issue
2	27/06/07	20	10 to 20	Modifications : - Inner tube design - Azimuthal bearing
3	10/07/07	22	6-8-9-11-13 to 22	Modifications : - Azimuthal bearing - Shell's thicknesses

TABLE OF CONTENTS

1. SCOPE

This report deals with the structure's analyse of the Telescope Mast composed by the inner tube, the fork, the structure carrying the mirror 4 and the mirror 5, the ground interface structure and the altitude and azimuthal bearings.

The results consist mainly in static calculation of displacements and stresses, and in dynamic calculation of the eigen modes.

2. DOCUMENTS

2.1 REFERENCE DOCUMENT

1967_00_00 : Mast Assembly Drawings
1967_01_03_02 : Calcul repport : Structure FEM Analyses
1967_01_07_02 : Calcul repport : Structure M4-M5 FEM Analyses

3. SUBSYSTEM DESCRIPTION

3.1 MATERIAL

All parts are made of Steel St 37_2, which presents the following characteristics:

Young	$E = 2.05E+11\ N/m^2$
Poisson	$\nu = 0.3$
Density	$\rho = 7850\ kg/m^3$
Yield	$R_e = 215$ Mpa
Ultimate	$R_u = 340$ Mpa

3.2 SAFETY FACTOR

	Yield	*Ultimate*
Structure	*1.5*	*2.0*

3.3 STRUCTURAL DESCRIPTION

The model has been done according to Catia drawings made by Amos' design office.

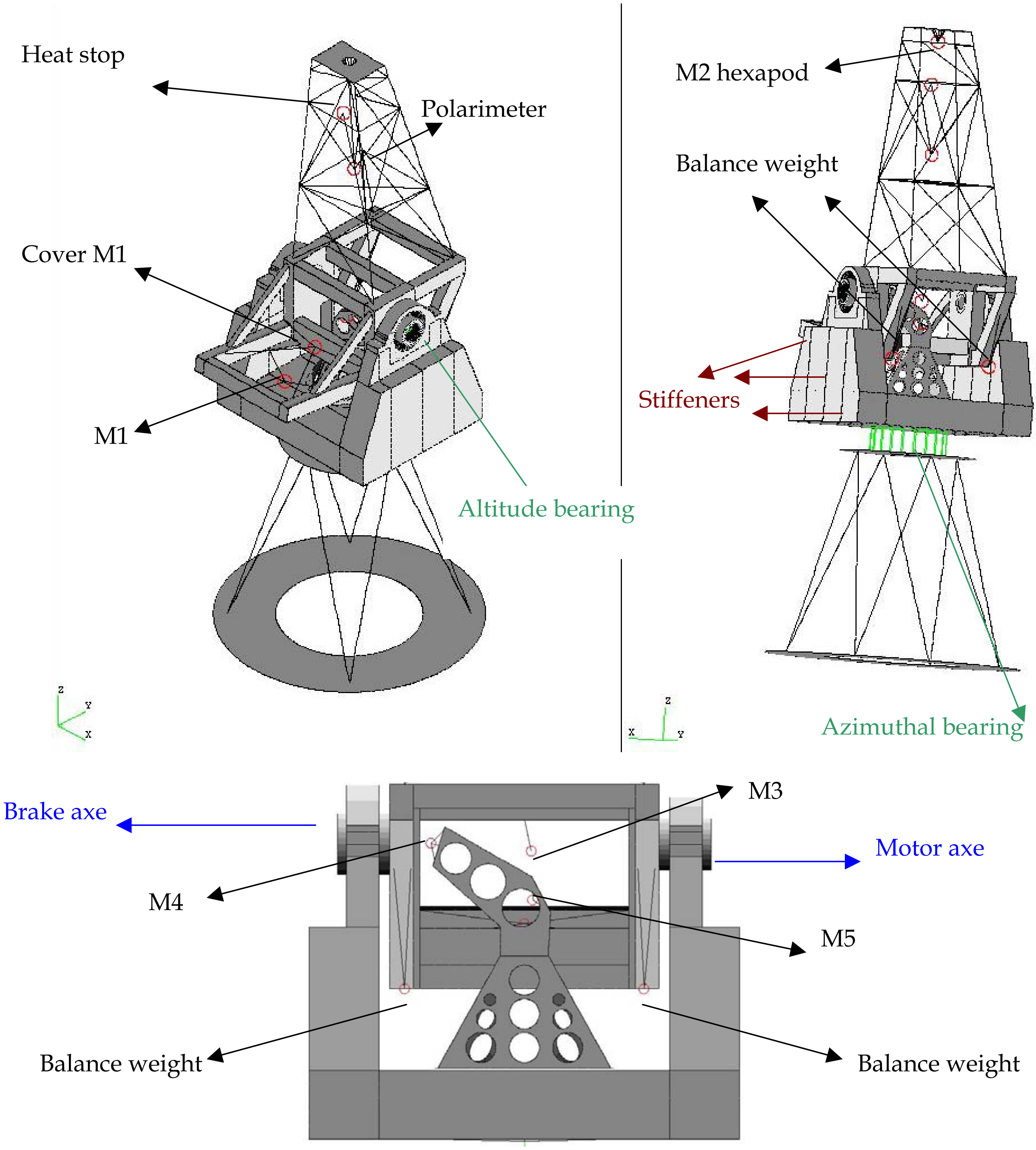

Picture 3-1 : Structure's representation

4. FEM MODEL DESCRIPTION

4.1 AXES AND UNIT SYSTEM

Origin :	Centre of the structure
OX :	Horizontal, brake axe directed
OY :	Horizontal, such that it creates a right-handed coordinate system
OZ :	Vertical, upwards directed

The unit system is millimetres, tons and Newtons.

4.2 STRUCTURE

The structure's model is made of shell, beams and volume elements.

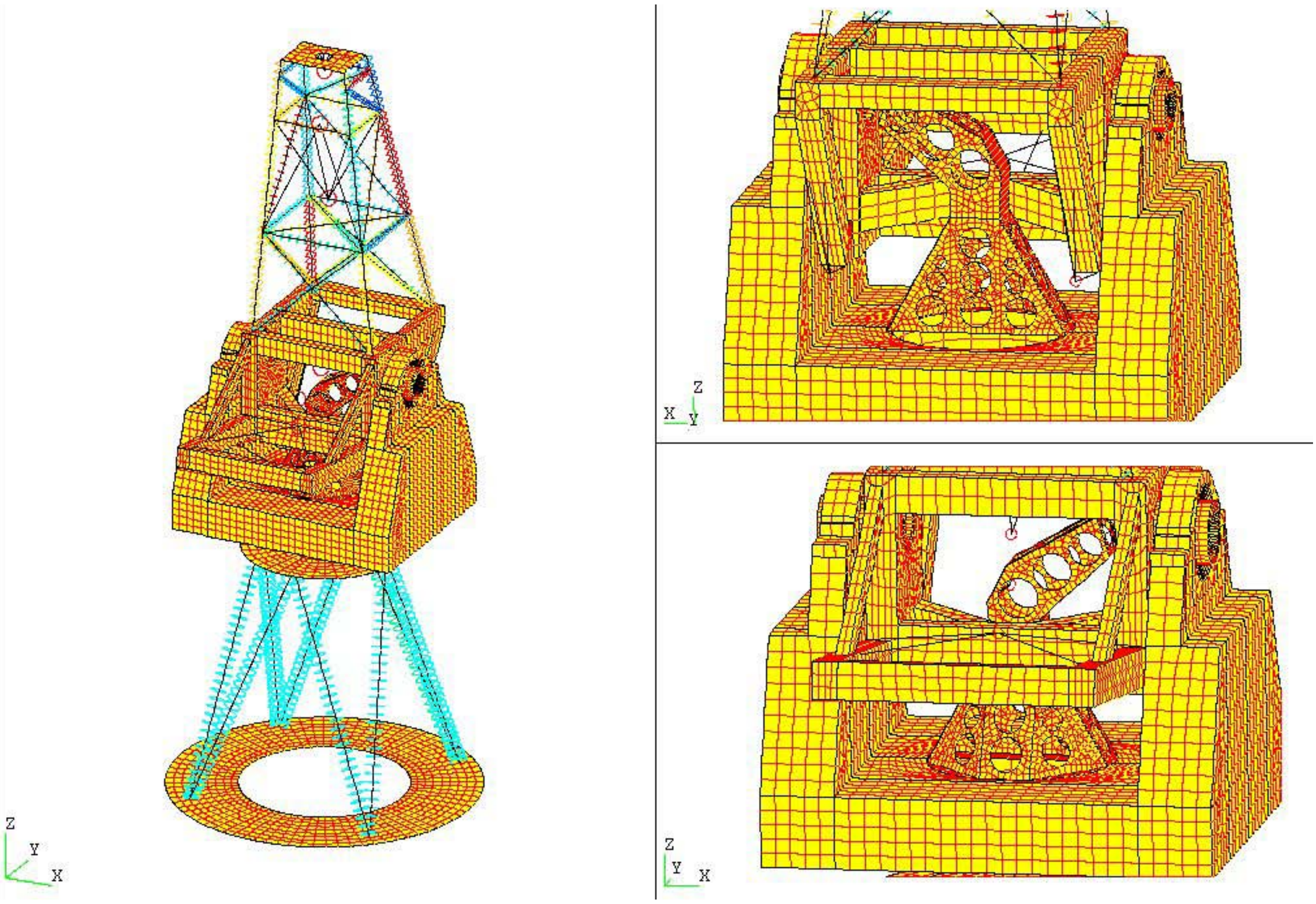

Picture 4-1 : Meshing of the structure

4.3 SHELL'S THICKNESSES

The follow picture represents the thicknesses of the shells.

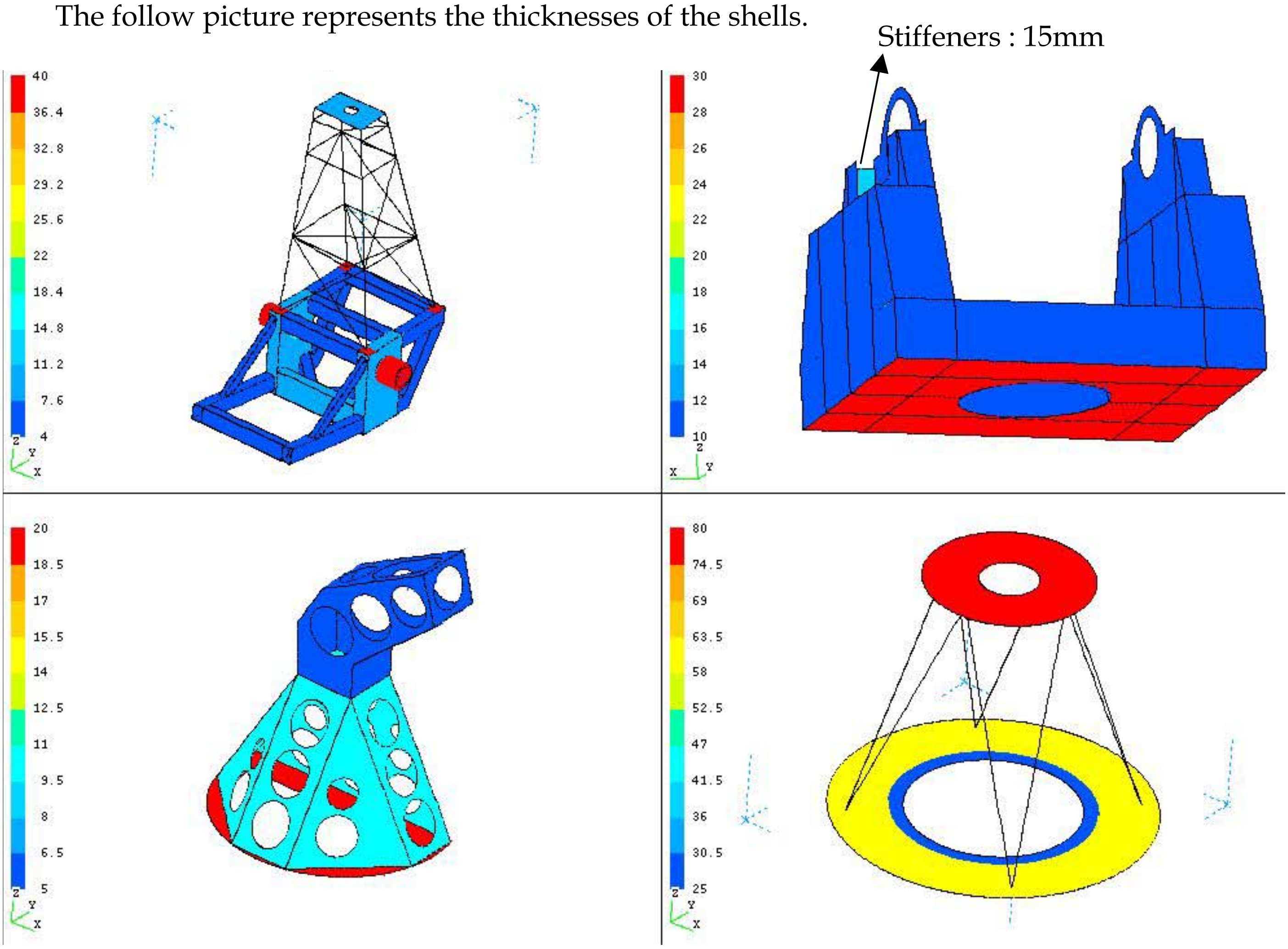
Stiffeners : 15mm

Picture 4-2 : Shell's thicknesses

4.4 INERTIA

	INERTIA [Kg*m^2]		
Structure	Ixx	Iyy	Izz
Tube	4,06E+02	3,68E+02	1,98E+02
Tube + fork + M4-M5 : zenith	8,79E+02	1,04E+03	6,66E+02
Tube + fork + M4-M5 : horizon	8,79E+02	8,75E+02	8,28E+02

4.5 CENTER OF GRAVITY

	CENTER OF GRAVITY [mm]		
Structure	X	Y	Z
Tube	- 3,15	- 0,06	0,10
Tube + fork + M4-M5 : zenith	- 2,83	- 1,05	- 425,85
Tube + fork + M4-M5 : horizon	- 2,83	- 0,99	- 425,87

4.6 MASS BUDGET

MASS BUDGET				
Element	Mass [kg]	X [mm]	Y [mm]	Z [mm]
M2 : Hexapod + mirror + thermal system	15	0,173	-0,759	1922,525
Heat stop	5	0	-58,601	1600
Polarimeter	5	5,229	41,831	1075
Cover system of M1	37	0,009	-342,323	-263,745
M1: whiffle tree + cell + mirror + thermal	55	-0,005	-637,286	-410,407
Mirror 3	4	-23,069	-0,002	-22,704
Balance weight	130	+/- 400	445	-480
Tube	452	-	-	-
Fork	1249	-	-	-
Mirror 4	4	312	0	3,62
Mirror 5	4	-28,148	0	-185,15
Structure M4-M5	48	-	-	-
G.I.S.	1477	-	-	-
TOTAL :	**3485**			

The mass of the structure is around 3.5T

5. LOADS AND BOUNDARY CONDITIONS

5.1 FIXATIONS

The structure is under gravity and is fixed along the three translations and the three rotations at four points of the ground interface structure's bottom.

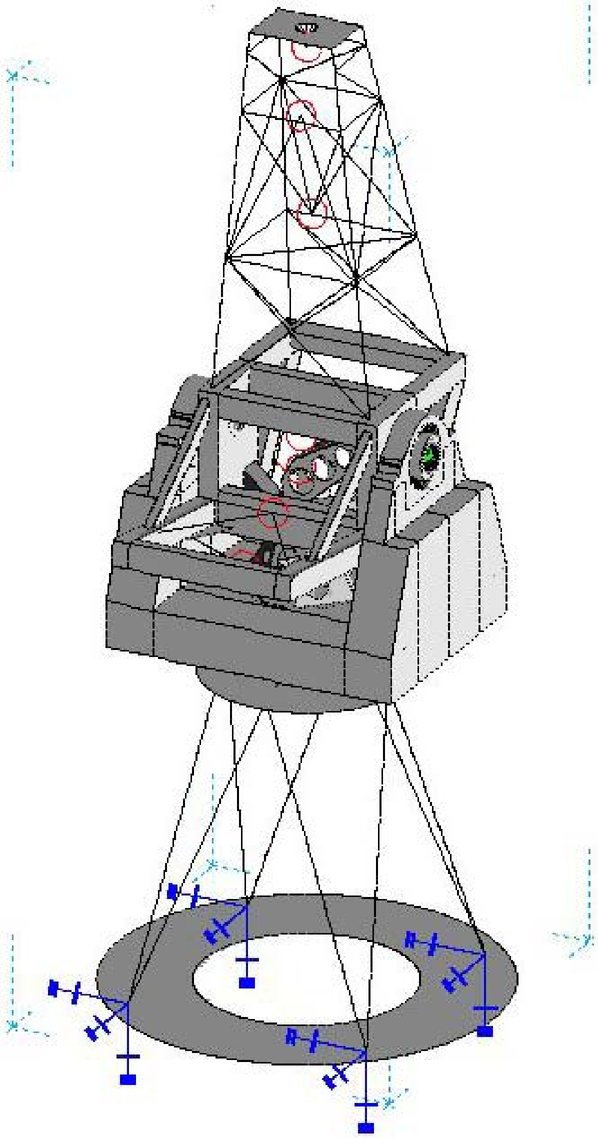

Picture 5-1 : Fixations' representation (blue)

5.2 CONNECTIONS

The different parts of the structure are connected together at trunnions by bushing elements that simulate the altitude bearings.
The fork is connected to the GIS by a serie of twenty bushing elements that simulate the azimuthal bearing. Bushings are defined only with axial and radial stiffnesses.
The tangential stiffness is given by the brake of the system and is not taken into account One bush has a tangential stiffness to avoid the rigid motion.

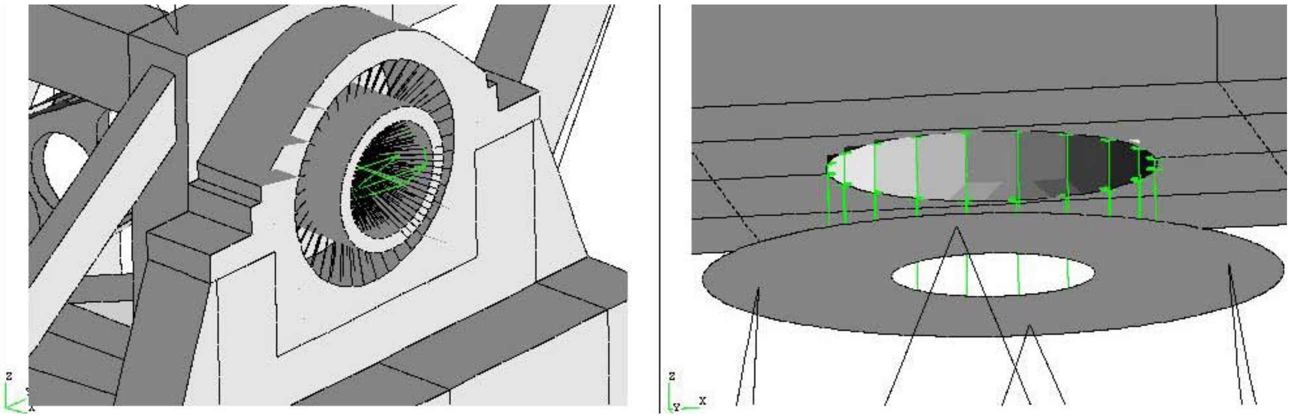

Picture 5-2 : Representation of the bush elements (green)

The structure M4-M5 is bolted to the fork by a liaison along the three translations.

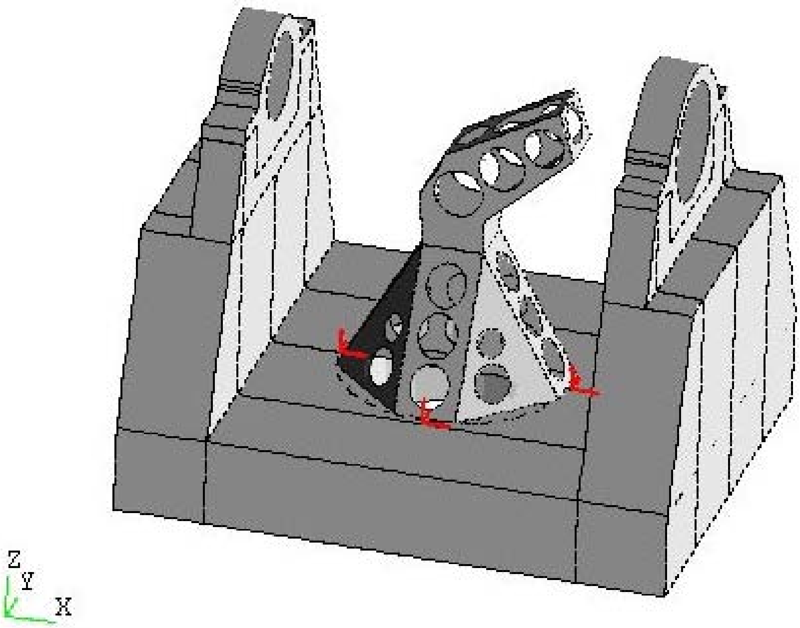

Picture 5-3 : Representation of the liaisons between the fork and the structure M4-M5 (red)

5.3 BEARINGS’ DEFINITIONS

5.3.1 Stiffnesses’ calculation for altitude bearings

The inner tube and the two altitude bearings can be represented by a schema of a beam rested on one side and fitted at the other side.

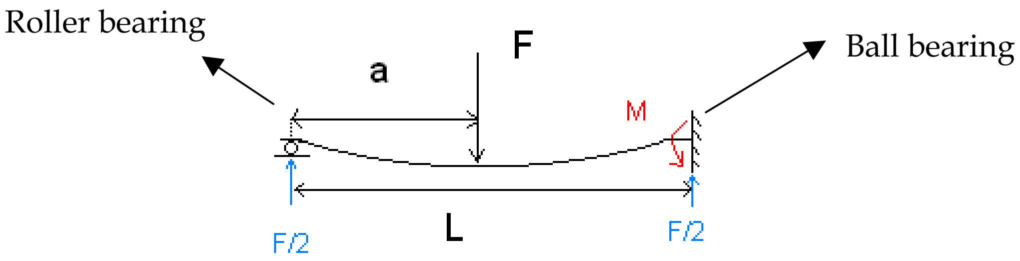

Picture 5-4 : Schema MNT

SKF have supplied us some formulae to calculate the several stiffnesses :

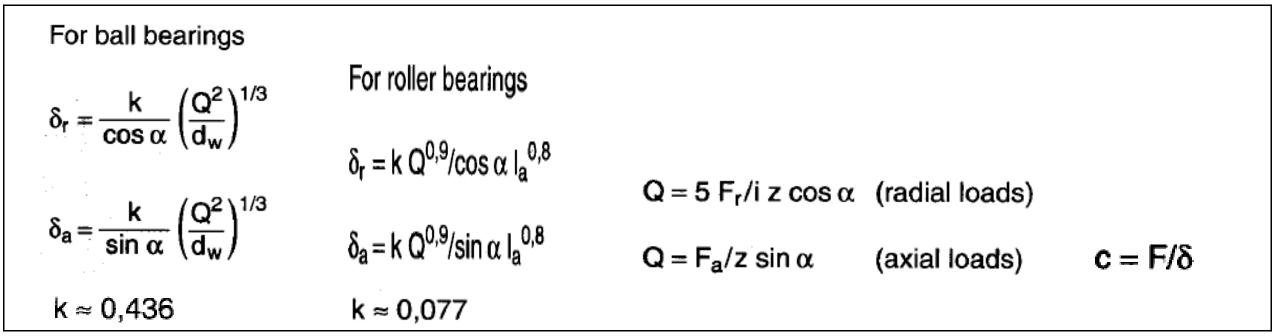
For ball bearings

$$\delta_r = \frac{k}{\cos\alpha}\left(\frac{Q^2}{d_w}\right)^{1/3}$$

$$\delta_a = \frac{k}{\sin\alpha}\left(\frac{Q^2}{d_w}\right)^{1/3}$$

$k \approx 0{,}436$

For roller bearings

$$\delta_r = k\,Q^{0,9}/\cos\alpha\;l_a^{0,8}$$

$$\delta_a = k\,Q^{0,9}/\sin\alpha\;l_a^{0,8}$$

$k \approx 0{,}077$

$Q = 5\,F_r/i\,z\cos\alpha$ (radial loads)

$Q = F_a/z\sin\alpha$ (axial loads)

$c = F/\delta$

5.3.1.1 *Ball bearing*

The ball bearing is a SKF 71934 CD that presents the follow characteristics :

- ✓ z = number of rolling elements = 29
- ✓ i = number of row = 1
- ✓ dw = rolling element diameter [mm] = 19.05
- ✓ Fr = radial loads = half of the dead weight of the inner tube = 4000N
- ✓ Fa = axial load which can be calculated from the bending moment

⇨ $M = - F * a * (L^2-a^2) / (2*L^2) = 900000$ [N*mm]

⇨ $Fa = M / (2*r) = 4500$ N with $r = 100$mm

So we obtain for the ball bearing :

- ✓ KTX = axial stiffness = 9.546e6 [N/mm]
- ✓ KTY = KTZ = radial stiffness = 3.139e5 [N/mm]
- ✓ KRX = KRY = KRZ = 0

5.3.1.2 *Roller bearing*

The roller bearing is a SKF NU1040MA that presents the follow characteristics :

- ✓ z = number of rolling elements = 24
- ✓ i = number of row = 1
- ✓ Ia = effective roller length [mm] = 26
- ✓ Fr = radial loads = half of the dead weight of the inner tube [N] = 4000
- ✓ Fa = axial load = 0

So we obtain for the roller bearing :

- ✓ KTX = axial stiffness = 0 [N/mm]
- ✓ KTY = KTZ = radial stiffness = 1.655e6 [N/mm]
- ✓ KRX = 1e11 [N*mm/rad]
- ✓ KRY = KRZ = 0

5.3.2 Stiffnesses of azimuthal bearing

The several stiffnesses of the bearing are:

- ✓ KTZ = axial stiffness = 5.3e6 [N/mm]
- ✓ KTX = KTY = radial stiffness = 1.6e6 [N/mm]
- ✓ KRX = KRY = KTZ = 1.75e11 [N*mm/rad]

Each bushing that simulate the bearing have a stiffness equal to :

- ✓ K axial_bush = K axial_bearing / number of bushes
- ✓ K radial_bush = (K radial_bush / number of bushes) * 1.5
- ✓ K tangential = K tilt = 0

6. FEM RESULTS

6.1 STATIC CALCULATION

6.1.1 Displacements

The following plot shows the displacements of the structure. The main displacement in modulus is about 0.09mm for the top plate of the structure.

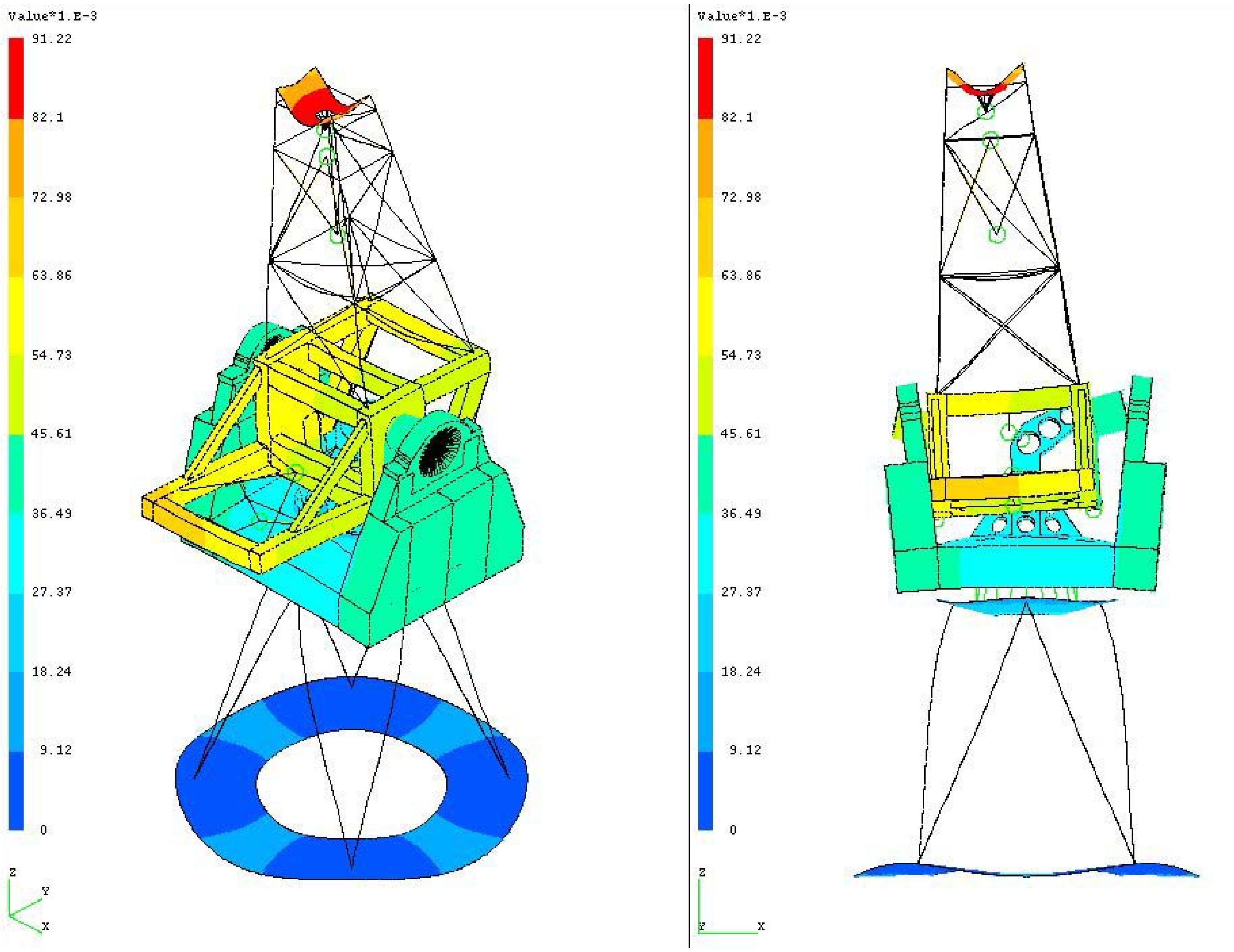

Picture 6-1 : Modulus displacements [mm]

6.1.2 Mirrors' deflection

6.1.2.1 *Initial position*

Telescope pointing to the Zenith		
Mirror	Component	Displacement [mm]/[rad]
M1	1	-1,18061E-02
M1	2	4,45168E-04
M1	3	-5,57753E-02
M1	4	1,64967E-05
M1	5	-1,17998E-05
M1	6	-9,67171E-08
M2	1	-3,87461E-02
M2	2	3,82026E-03
M2	3	-8,13945E-02
M2	4	-5,99463E-06
M2	5	-1,12573E-05
M2	6	8,23921E-08
M3	1	-1,30597E-02
M3	2	1,14068E-03
M3	3	-5,27039E-02
M3	4	1,32216E-07
M3	5	-3,39087E-05
M3	6	-7,08485E-08
M4	1	1,94971E-03
M4	2	1,16884E-02
M4	3	-3,40281E-02
M4	4	-1,57293E-05
M4	5	1,00817E-05
M4	6	3,34094E-07
M5	1	2,44665E-04
M5	2	8,59768E-03
M5	3	-3,12742E-02
M5	4	-1,58559E-05
M5	5	8,02649E-06
M5	6	3,47543E-07

Component	Relative Displacements M1-M2 [µm]/[mrad]
1	26,94
2	3,38
3	25,62
4	0,0225
5	0,0005
6	0,0002

Component	Relative Displacements M4-M5 [µm]/[mrad]
1	1,71
2	3,09
3	2,75
4	0,0001
5	0,0021
6	0,00001

6.1.2.2 *Evolution of deflection with tube's tilting*

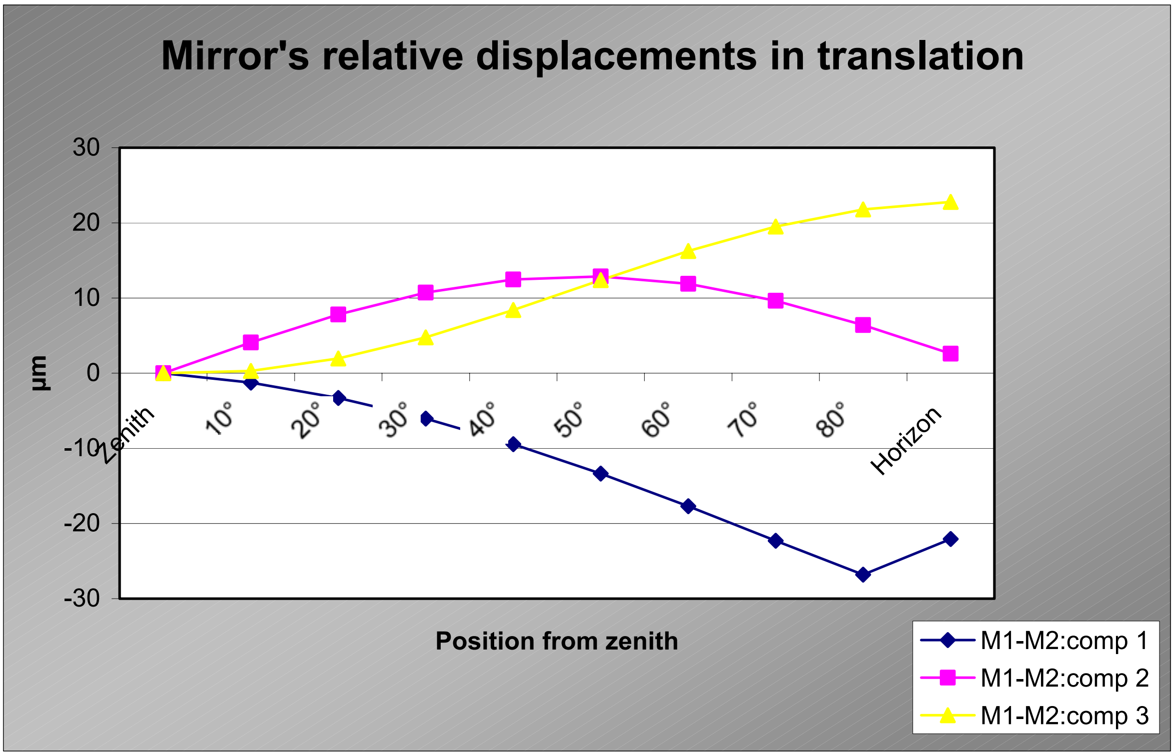

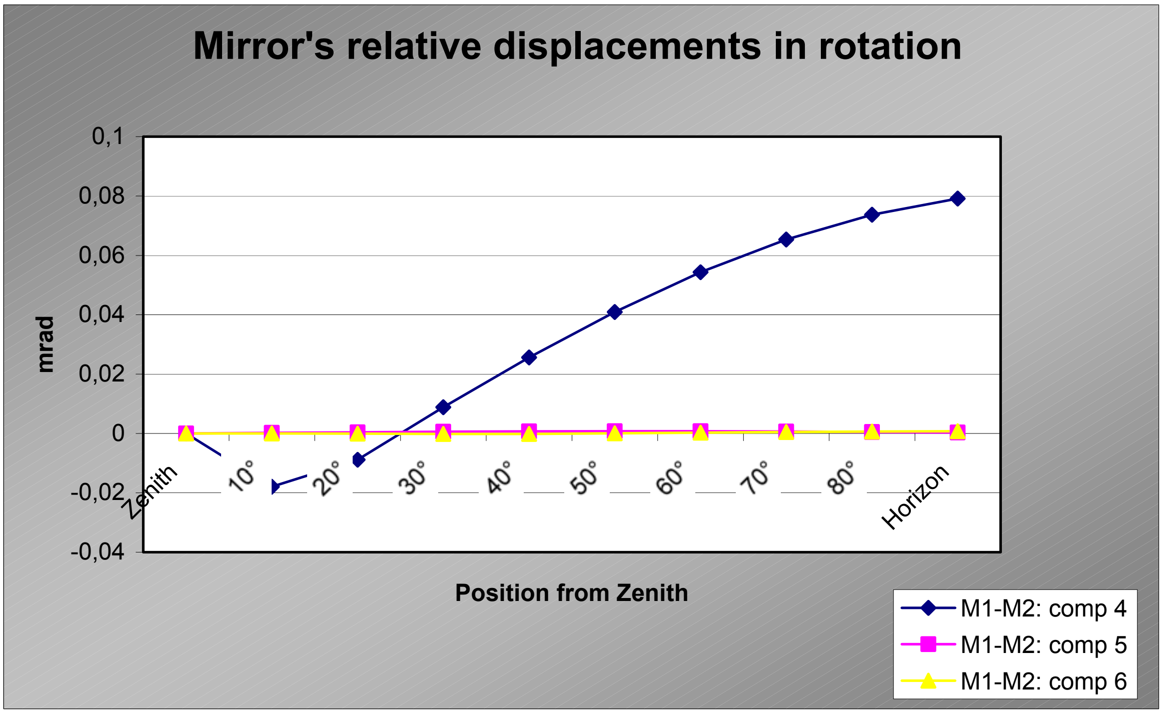

6.1.2.3 *M1 vs cell deflection*

Structure physically turned by alpha

load always along OZ

Alpha	T lateral	T along tube	R around OX
0	-1,80E-07	-7,30E-06	-6,70E-07
-10	-3,80E-07	-7,20E-06	-8,80E-07
-20	-5,30E-07	-7,00E-06	-1,10E-06
-30	-6,20E-07	-6,80E-06	-1,20E-06
-40	-6,30E-07	-6,60E-06	-1,30E-06
-50	-5,70E-07	-6,40E-06	-1,40E-06
-60	-4,30E-07	-6,20E-06	-1,40E-06
-70	-2,50E-07	-6,00E-06	-1,40E-06
-80	-3,10E-08	-6,00E-06	-1,30E-06
-90	1,90E-07	-6,00E-06	-1,20E-06

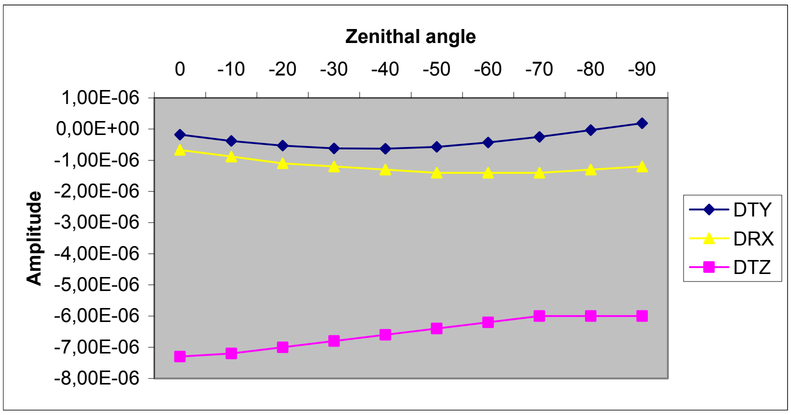

Load turned by alpha

structure remains unchanged

Alpha	DTY	DTZ	DRX
0	-1,80E-07	-7,30E-06	-6,70E-07
-10	8,70E-07	-7,10E-06	-8,80E-07
-20	1,90E-06	-6,80E-06	-1,10E-06
-30	2,70E-06	-6,20E-06	-1,20E-06
-40	3,70E-06	-5,40E-06	-1,30E-06
-50	4,50E-06	-4,50E-06	-1,40E-06
-60	5,10E-06	-3,40E-06	-1,40E-06
-70	5,60E-06	-2,30E-06	-1,40E-06
-80	5,90E-06	-1,00E-06	-1,30E-06
-90	6,00E-06	1,90E-07	-1,20E-06

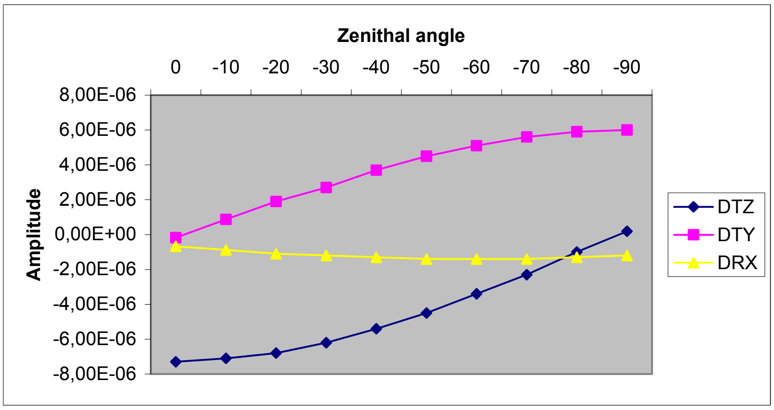

6.1.3 Stresses

6.1.3.1 *Shell*

The maximum Von Mises stress in shell element is 4.51 MPa. It represents the maximum for the entire model.

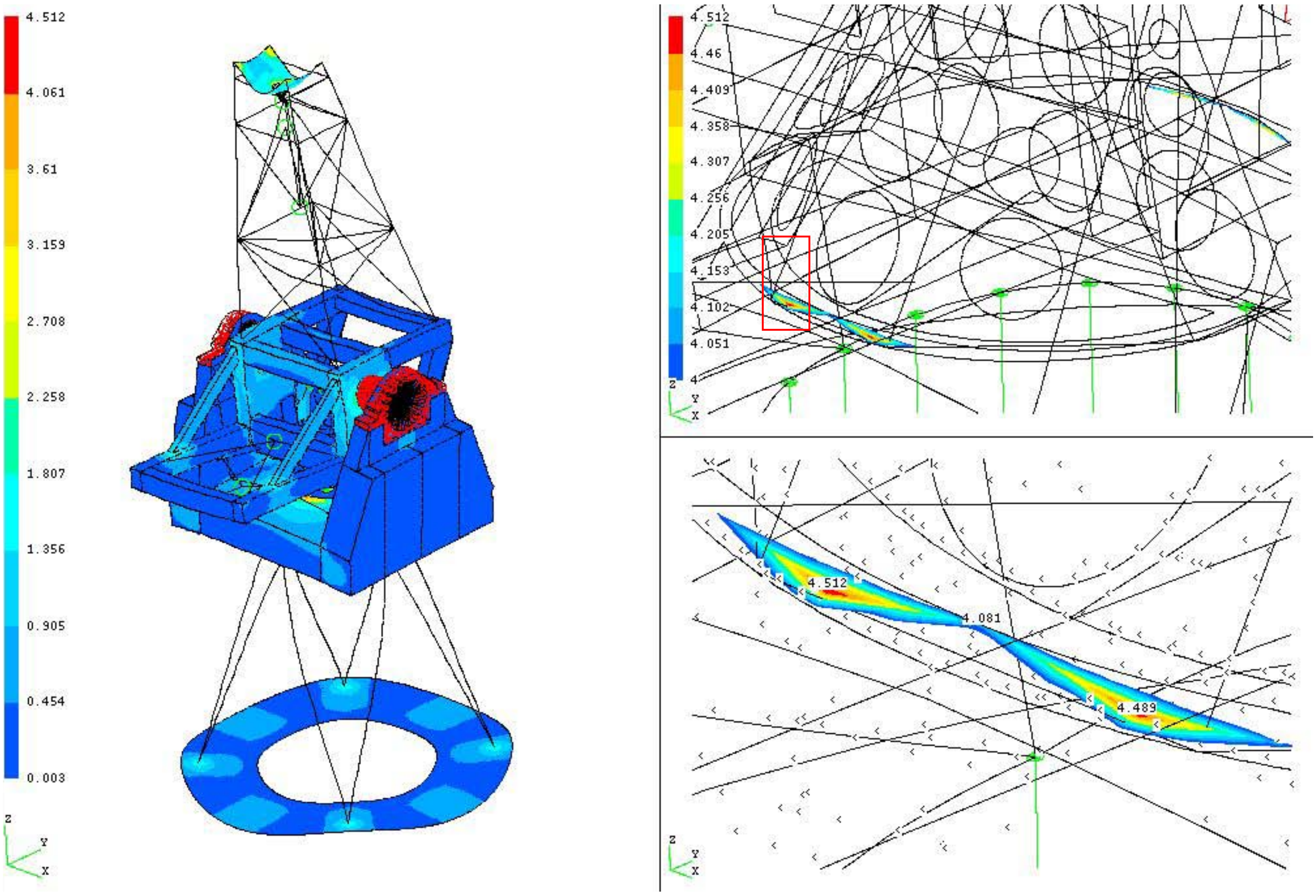

Picture 6-2 : maximum Von Mises stresses in shell elements [Mpa]

The maximum value corresponds to a stress located where the structure M4-M5 is bolted to the fork.
The maximum Von Mises stress , equal to 4.512, implies that the safety margins are positive.

$$SM_{yield} = \frac{\sigma_{yield\ \ stress}}{\sigma_{calculated} * 1.5} - 1 = \frac{215}{4.512 * 1.5} - 1 = 30.77 \rangle 0$$

$$SM_{ultimate} = \frac{\sigma_{ultimate\ \ stress}}{\sigma_{calculated} * 2} - 1 = \frac{340}{4.512 * 2} - 1 = 36.68 \rangle 0$$

6.1.3.2 *Volume*

The maximum Von Mises stress in volume element is 1.302 MPa.

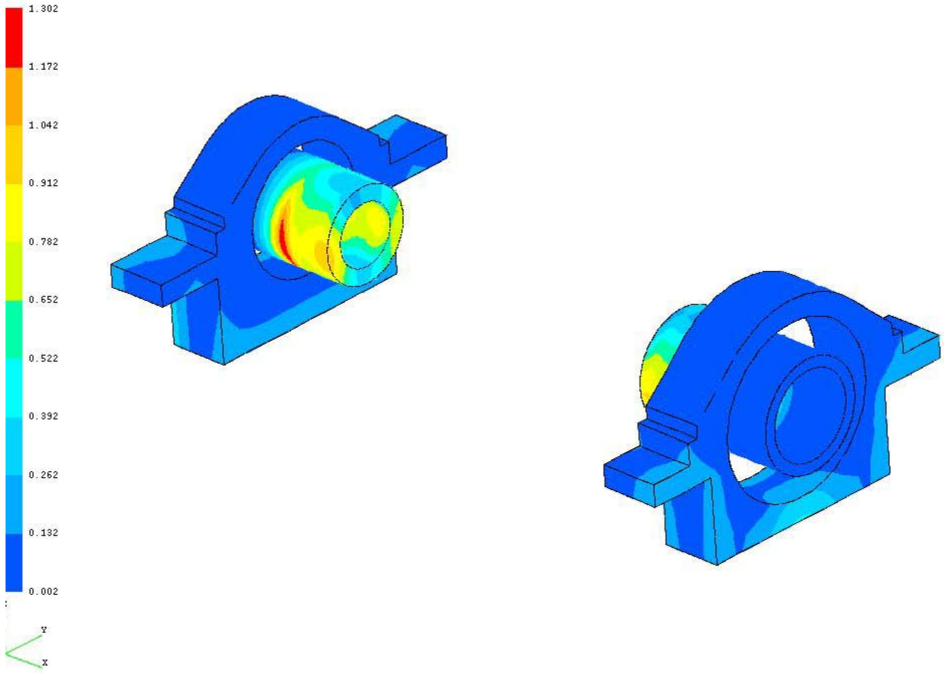

Figure 6-3 : Maximum Von Mises stresses in volume [Mpa]

6.1.3.3 *Beam*

The maximum Von Mises stress in beams is 2.812 MPa.

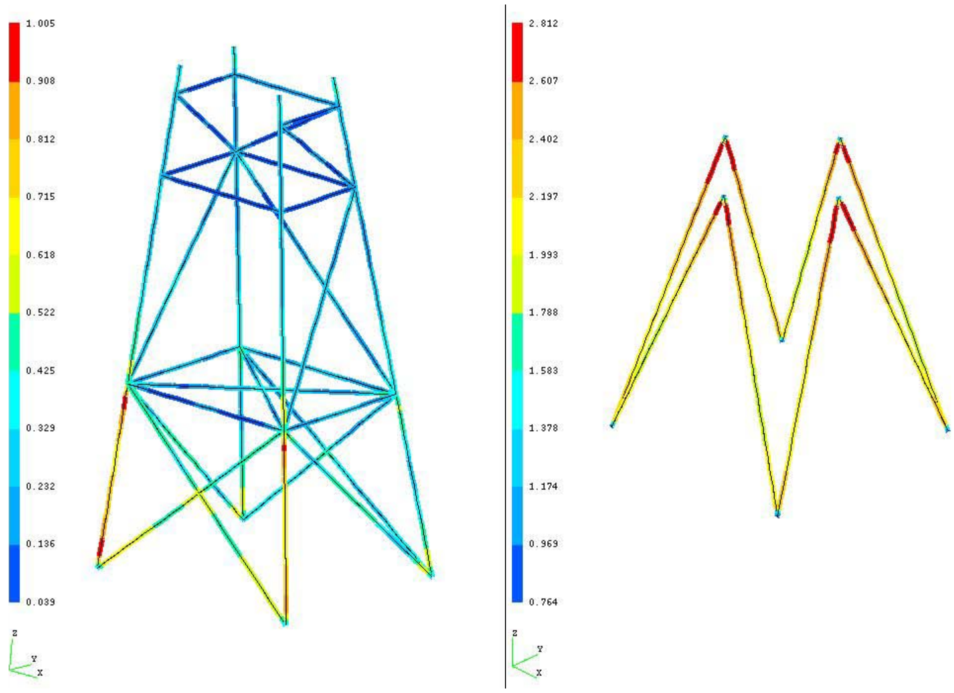

Picture 6-4 : Maximum Von Mises stresses in beams [Mpa]

6.2 DYNAMIC CALCULATION

6.2.1 First eigen mode

The first frequency is around 12.7 Hz. This mode is characterized by a rotation along the vertical axe of the tube.

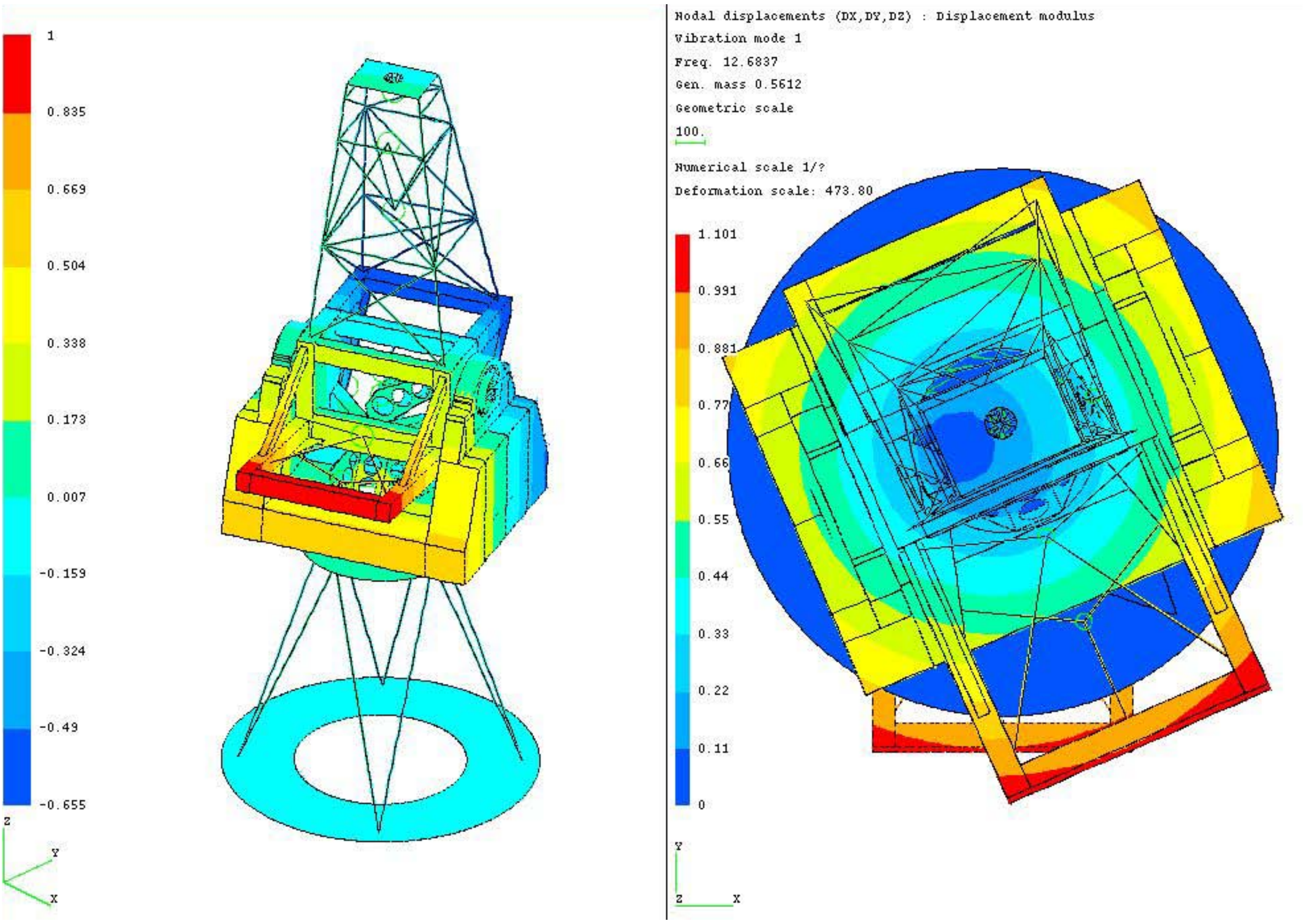

Picture 6-5 : X and Z displacement for the first frequency [mm]

We don't take into account this value for our analyze because this mode is due to the azimuthal bearing which is defined with a quasi null tangential stiffness.

6.2.2 Second eigen mode

The second frequency is around 21.3 Hz. This mode is characterized by a translation along the axeX of the tube and a rotation along the axeY of the fork.

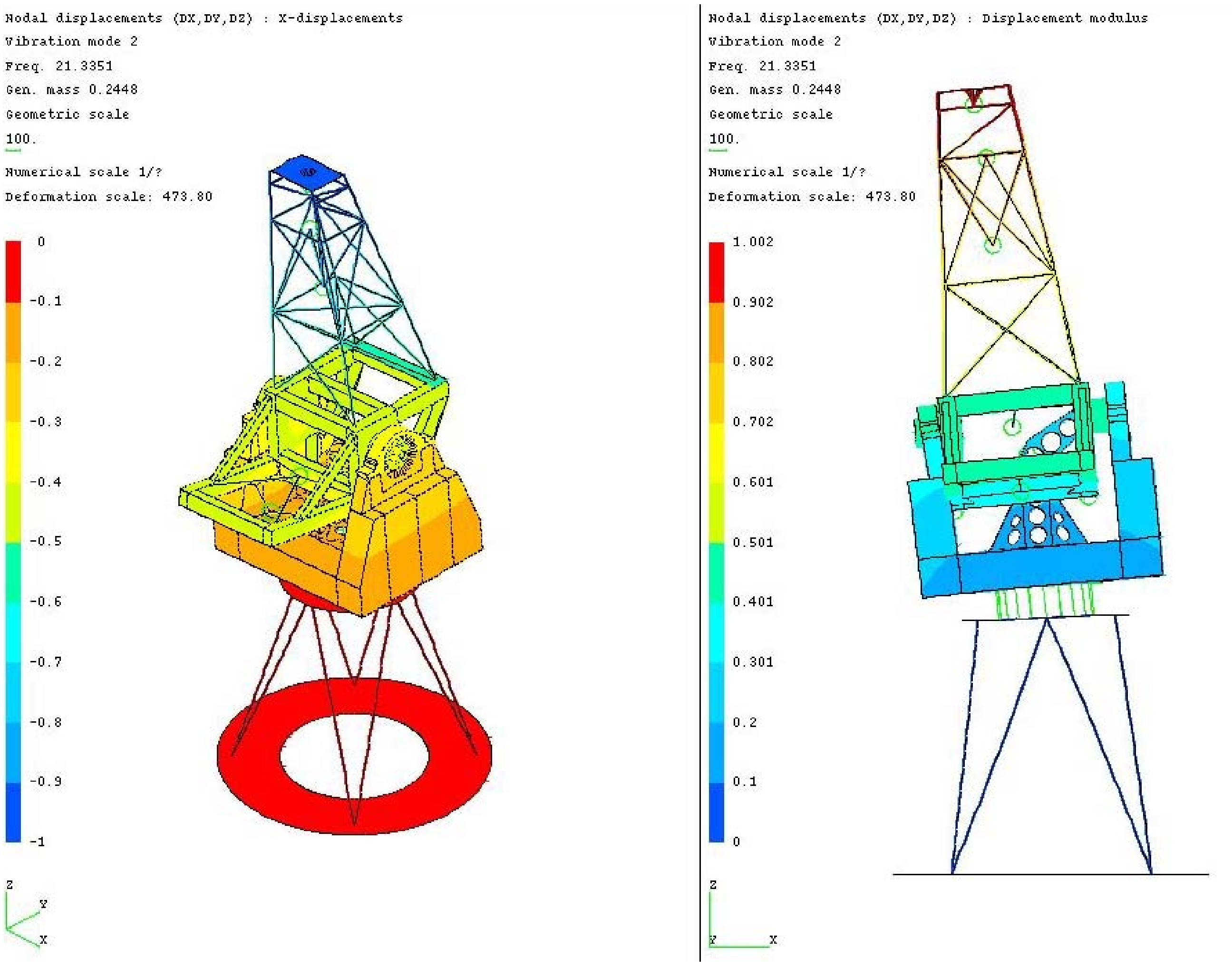

Picture 6-6 : X and modulus displacements for the second eigen mode [mm]

This value is above 20 Hz which represents the limit minimum value acceptable.

6.2.3 Third eigen mode

The third frequency is around 23 Hz. This mode is characterized by a translation along the axeY of the tube and a rotation along the axeX of the fork.

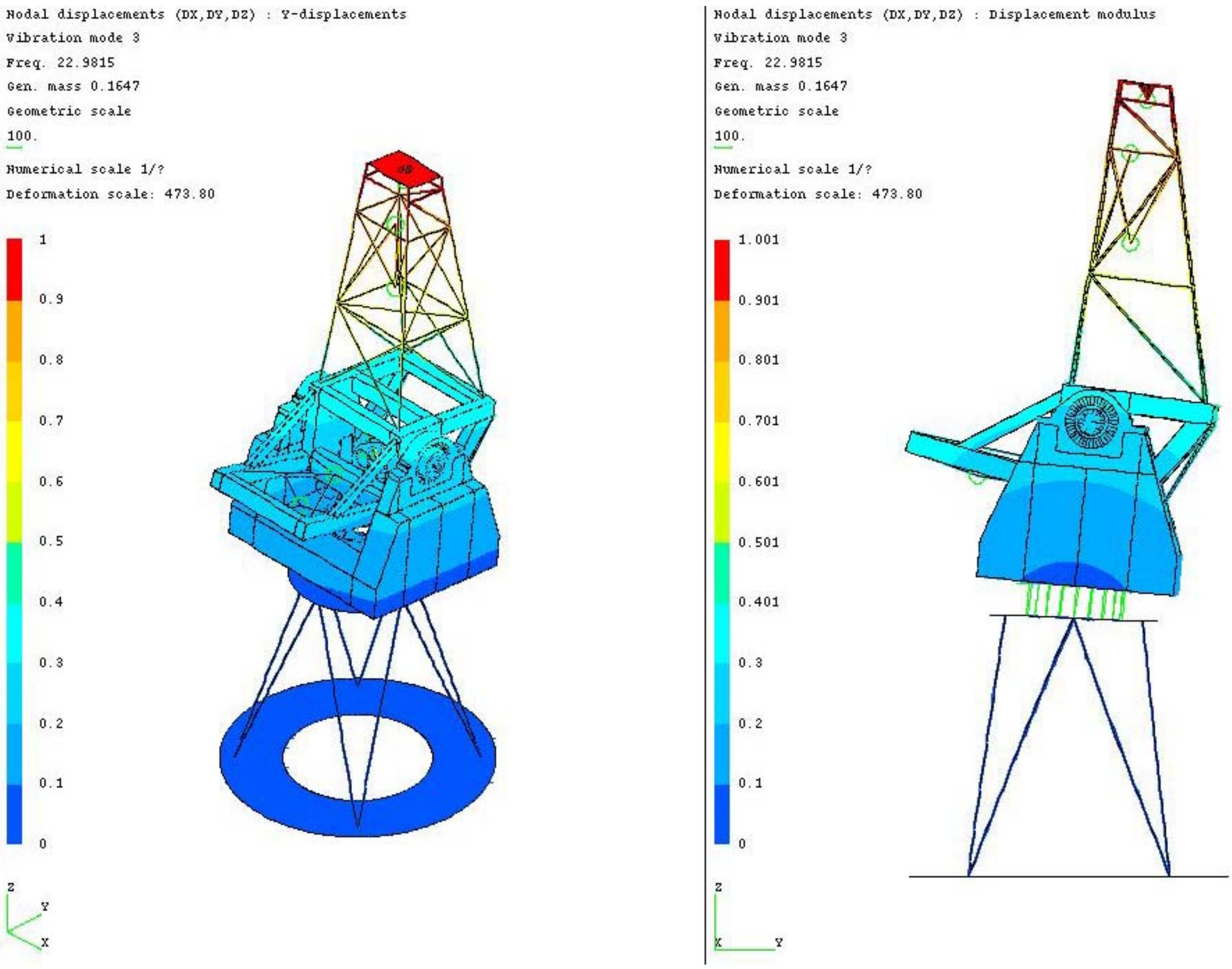

Picture 6-7 : Y and modulus displacements for the third eigen mode [mm]

6.2.4 List of eigen modes below 100 Hz

	Frequency [Hz]	Type	Effective masses [%]					
			MX	MY	MZ	PHIX	PHIY	PHIZ
1	12,683	Rz	0	0,3	0	0	0	51,2
2	21,335	Tx	42,7	0	0	0	0	0
3	22,981	Ty	0	38,8	0	0	0	0,4
4	36,432	Ty-Rx	0,2	26,4	0	14,4	0,1	0
5	44,192	Tx-Ry	25,5	0,2	0,1	0,2	22	0
6	57,561	Tx	4,1	0,1	0,7	0,2	0,7	0
7	66,289	Ty-Rx	0	7,2	0,1	8,3	0,1	0
8	74,213	Tz	0,4	0	41,6	0	0,7	0
9	81,528	Tz-Ry	0,3	0	13,8	0	0,9	0
10	96,264	TZ	0	0	3,2	0	0	0

MULTI APPLICATION SOLAR TELESCOPE

FOR

UDAIPUR SOLAR OBSERVATORY INDIA

Cell Mirror 1 : Initial FEM analyses

Doc. nr : **AMOS/1967/01/09**

Issue : **2**

Date : **13th July 2007**

	NAME	DATE	SIGNATURE
Prepared by	F. GRAILLET	13/07/07	
Checked by	J-M. SCHUMACHER / C. DELREZ		
Released by	S. DENIS		

DISTRIBUTION LIST

Name	Company	Quantity
Archives	AMOS	original

CHANGE RECORD

ISSUE	DATE	NB OF PAGES	MODIFIED PAGES	REMARKS
1	30/05/07	18		Initial issue
2	13/07/07	14	1 to 14	Design's selection

TABLE OF CONTENTS

1. SCOPE

This report deals with the analyse of the cell of the primary mirror. The results consist mainly in static calculation of displacements and in dynamic calculation of the eigen modes in two load cases :

1. Tube pointing to the zenith
2. Tube pointing to the horizon

2. DOCUMENTS

2.1 REFERENCE DOCUMENT

3. SUBSYSTEM DESCRIPTION

3.1 MATERIAL

All parts are made of Steel St 37_2, which presents the following characteristics:

Young	$E = 2.05E+11\ N/m^2$
Poisson	$\nu = 0.3$
Density	$\rho = 7850\ kg/m^3$

Yield	$R_e = 215$ Mpa
Ultimate	$R_u = 340$ Mpa

3.2 SAFETY FACTOR

	Yield	*Ultimate*
Structure	*1.5*	*2.0*

4. FEM MODEL DESCRIPTION

4.1 STRUCTURAL DESCRIPTION

Three hollow circle vertical beams are connected together by vertical plates forming an equilateral triangle. Each beam is connected to an horizontal plate which is bolted to the inner tube. Three stiffeners are welded under the horizontal plates.

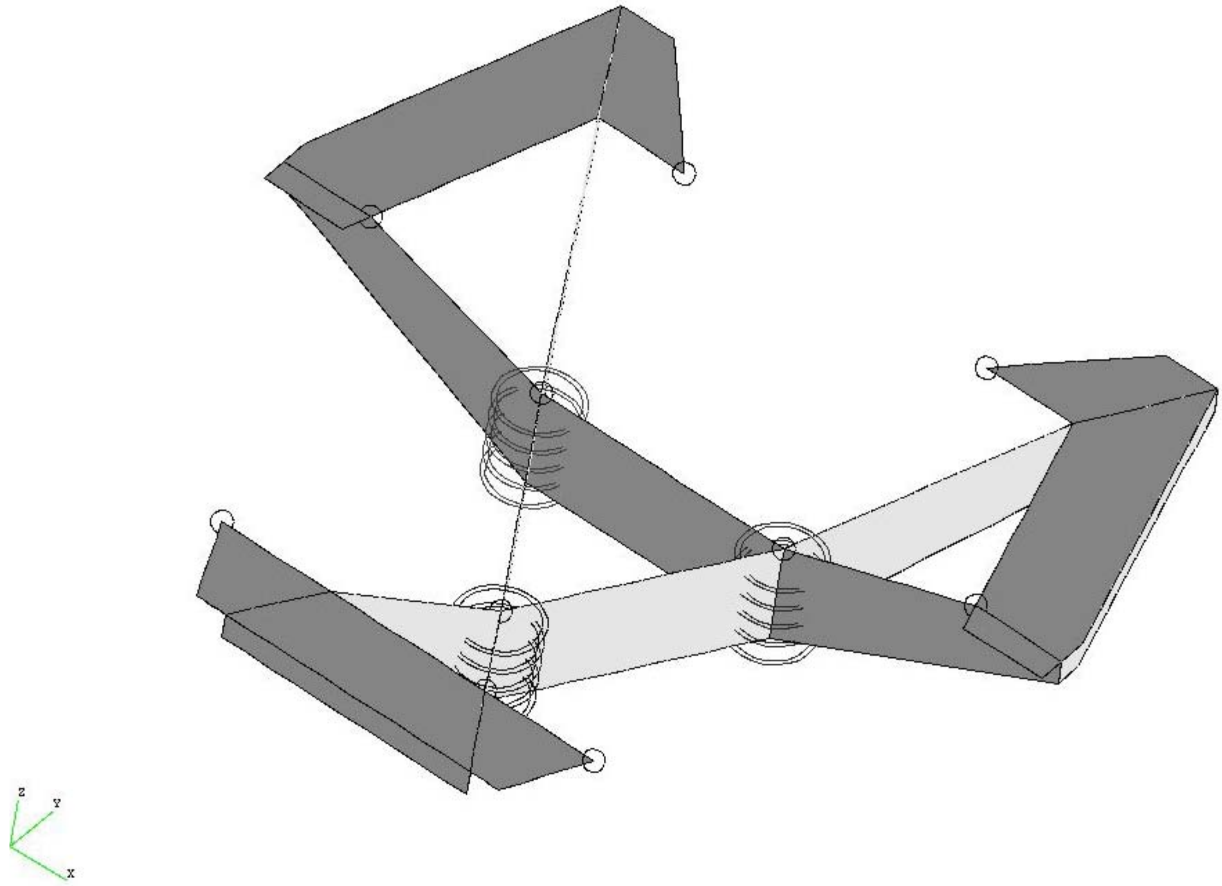

Picture 4-1 : Structure's representation

4.2 BEAMS' AND SHELLS' DIMENSIONS

The total mass of the M1 cell is around 29 kg.

The dimensions of the vertical beams are : Re = 44.5mm , Ri = 39.5mm

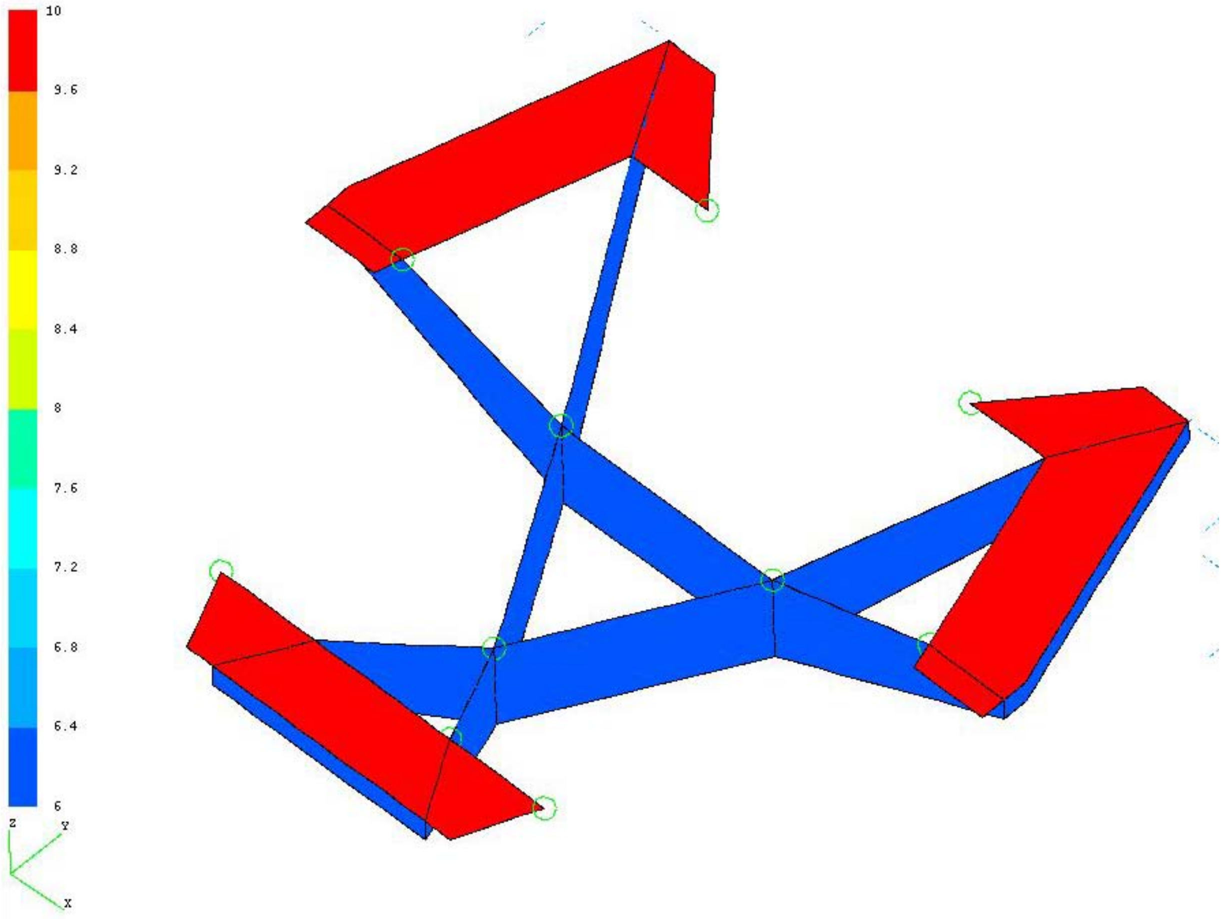

Picture 4-2 : Representation of shells' thicknesses [mm]

4.3 AXES AND UNIT SYSTEM

Origin :	Centre of the structure
OX :	Horizontal, such that it creates a right-handed coordinate system
OY :	Horizontal, axe of symetry
OZ :	Vertical, upwards directed

The unit system is millimetres, tons and Newtons.

4.4 STRUCTURE

The structure's model is made of beam and shell elements.

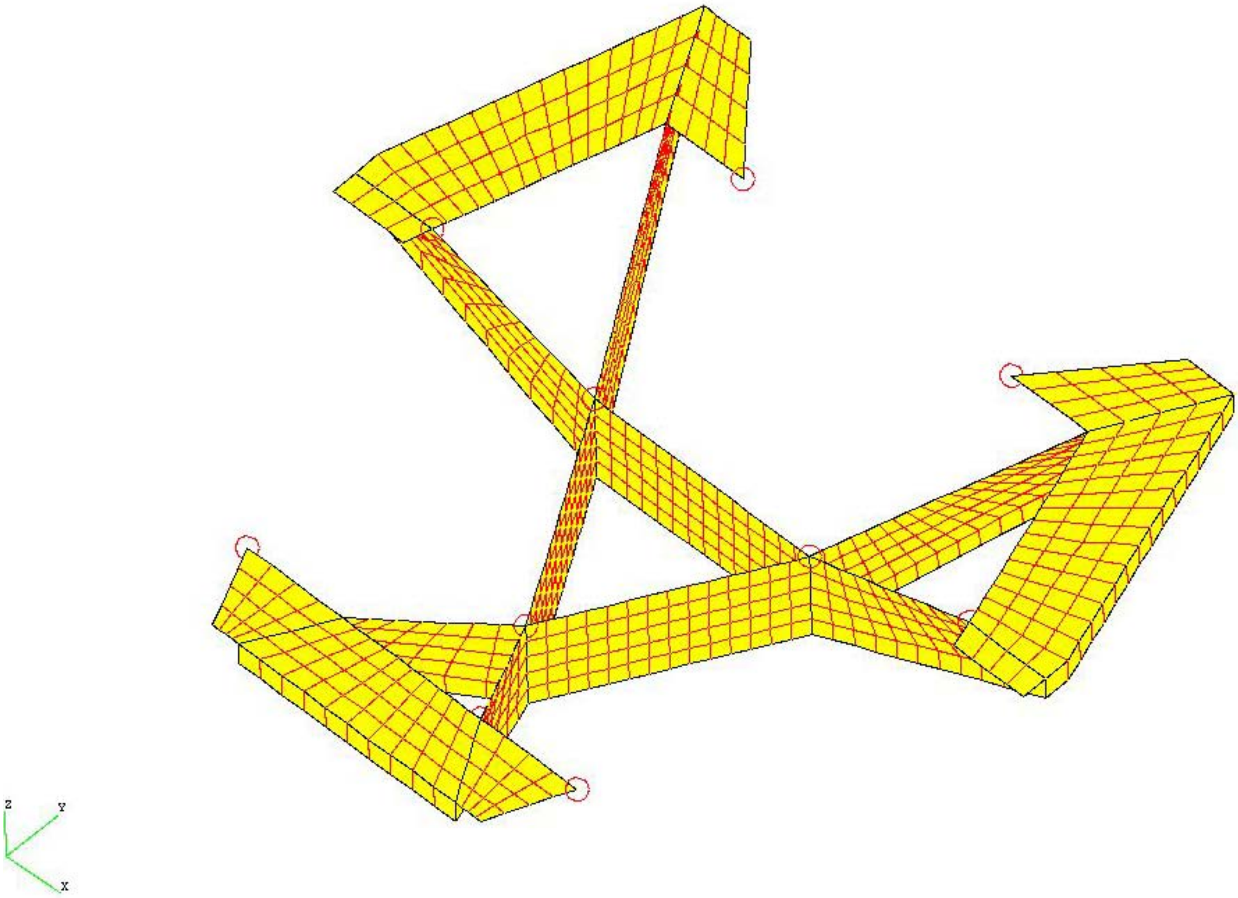

Picture 4-3 : Meshing of the structure

5. LOADS AND BOUNDARY CONDITIONS

5.1 FIXATIONS

The structure is fixed along the three translations at three points located at the center of the horizontal plates.

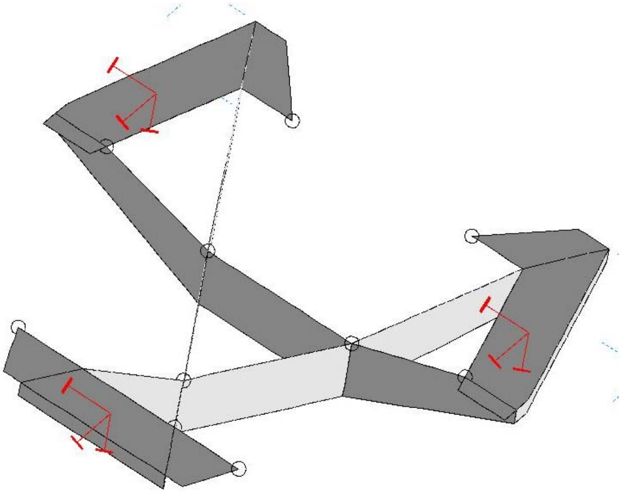

Picture 5-1 : Fixations' representation

5.2 MASSES

The structure is under gravity (Z- directed for load case 1 and Y+ directed for load case 2) and supports the mass of the mirror (32kg), its whiffle tree (4.5kg) and the four astatic levers (4 x 2kg).

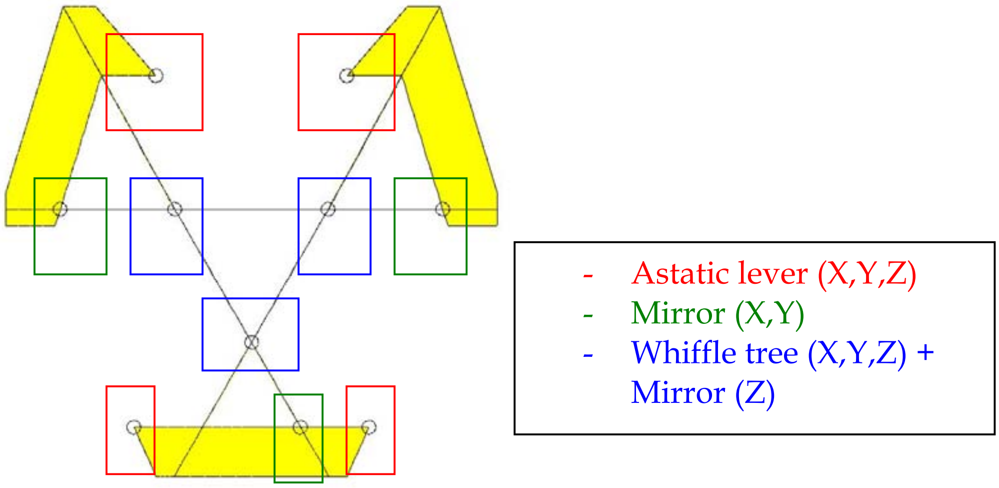

Picture 5-2 : Localisation of the different masses supported by the cell

6. FEM RESULTS

6.1 LOAD CASE 1 : ZENITH POSITION

6.1.1 Static calculation

6.1.1.1 Displacements

The following plot shows the displacements of the structure. The main vertical displacement is about 61 µm for the entire cell.
If we except the horizontal plates, the main vertical displacement is about 25 µm.

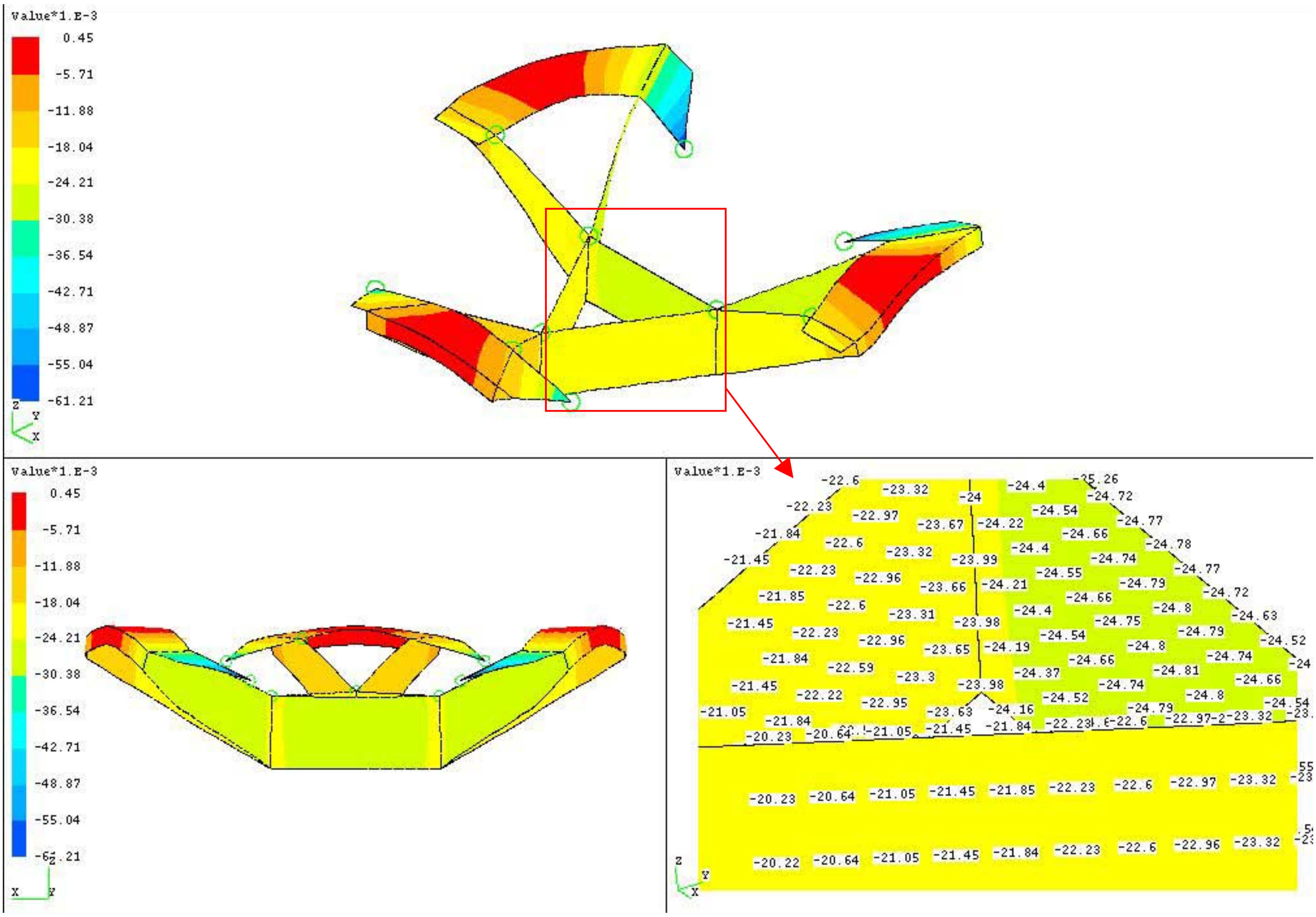

Picture 6-1 : Z displacements [mm]

6.1.1.2 Stresses

The maximum Von Mises stress in shell element is 4.54 MPa. It represents the maximum for the entire model.

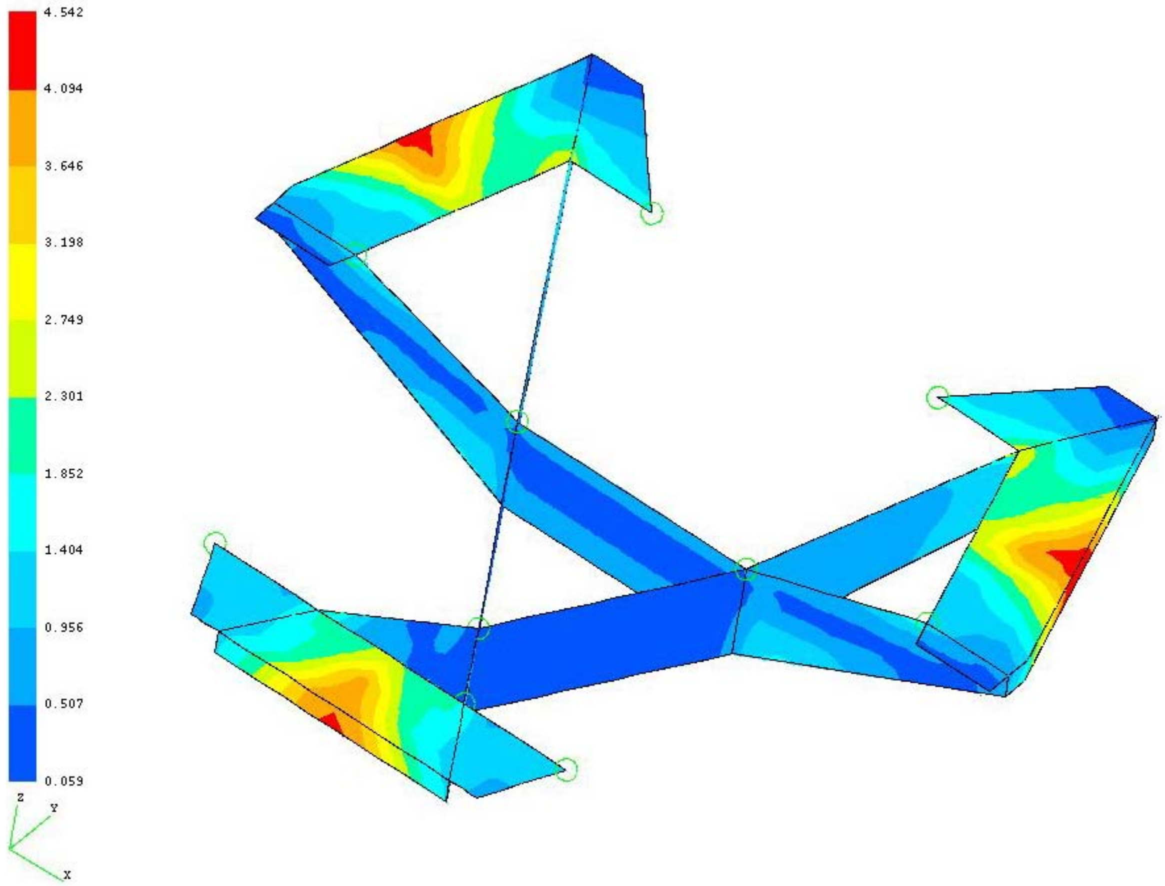

Picture 6-2 : maximum Von Mises stresses in shell elements [Mpa]

The maximum value corresponds to a stress located at the points of structure's fixation. The maximum Von Mises stress , equal to 4.542, implies that the safety margins are positive.

$$SM_{yield} = \frac{\sigma_{yield\ stress}}{\sigma_{calculated} * 1.5} - 1 = \frac{215}{4.542 * 1.5} - 1 = 30.56 \rangle 0$$

$$SM_{ultimate} = \frac{\sigma_{ultimate\ stress}}{\sigma_{calculated} * 2} - 1 = \frac{340}{4.542 * 2} - 1 = 36.43 \rangle 0$$

6.1.2 Dynamic calculation

6.1.2.1 *First eigen mode*

The first frequency is around 39 Hz. This mode is the first mode of torsion characterized by a rotation along the vertical axe.
The second frequency is around 86 Hz. This mode is characterized by a translation along the axe Z and a rotation along the axe X

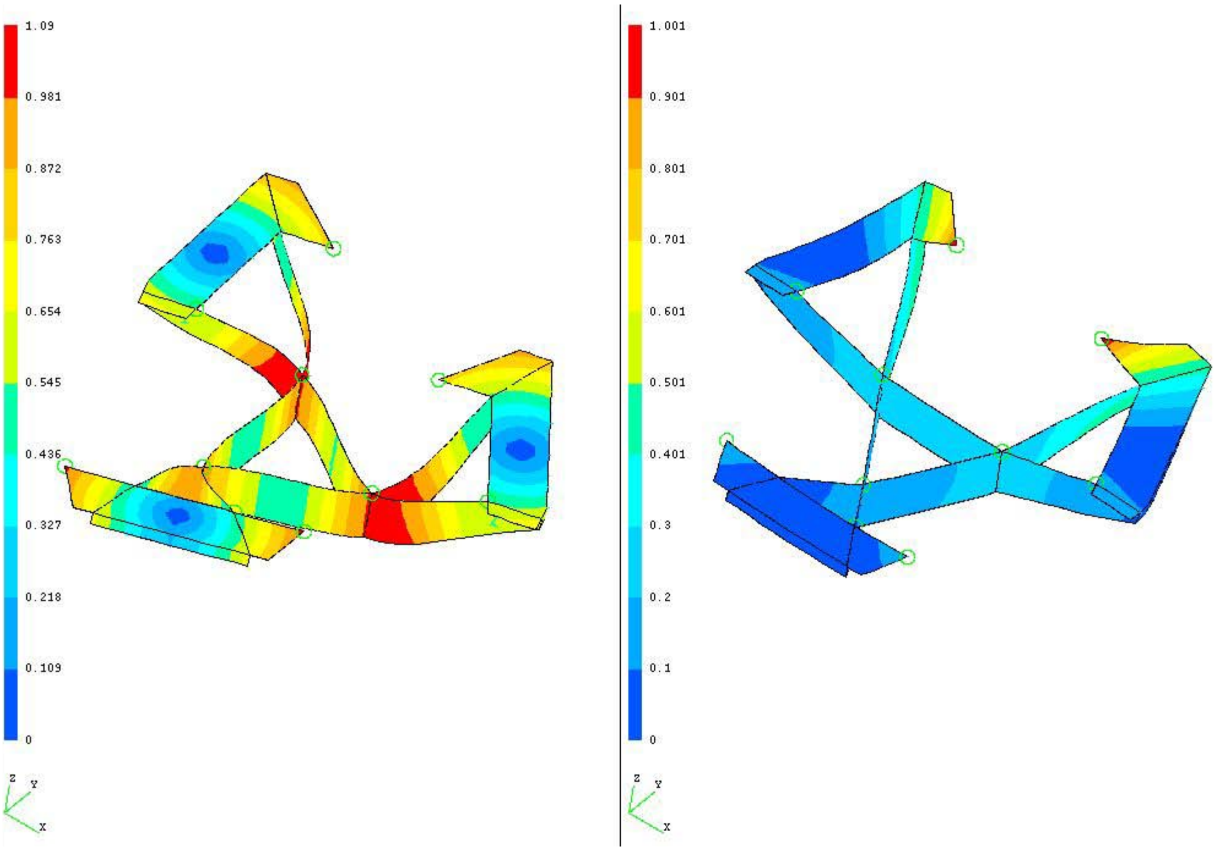

Figure 6-3 : Modulus displacement for the first and the second frequency

6.1.2.2 *List of the eigen mode below 200Hz*

	Frequency [Hz]	Type	Effective masses [%]					
			MX	MY	MZ	PHIX	PHIY	PHIZ
1	38,919	Rz	2	0,8	0	0	0	4,9
2	85,662	Tz-Rx	0	0	54,2	69,5	0	0
3	106,720	Ry	1,1	0,6	0,5	0	23,8	1,5
4	108,037	Tz	0	0,1	17,8	0,8	1,1	0
5	111,825	Tx-Ry	3,7	0,2	0	0	12,6	2,5
6	164,739	Tz-Rx	0	5,2	12,4	13,2	0	0
7	185,661	Tx-Rz	13,7	0,9	0	0	0,8	9,5

6.2 LOAD CASE 2 : HORIZON POSITION

6.2.1 Static calculation

6.2.1.1 *Displacements*

The following plot shows the displacements of the structure. The main vertical displacement is about 25 µm for the entire cell.

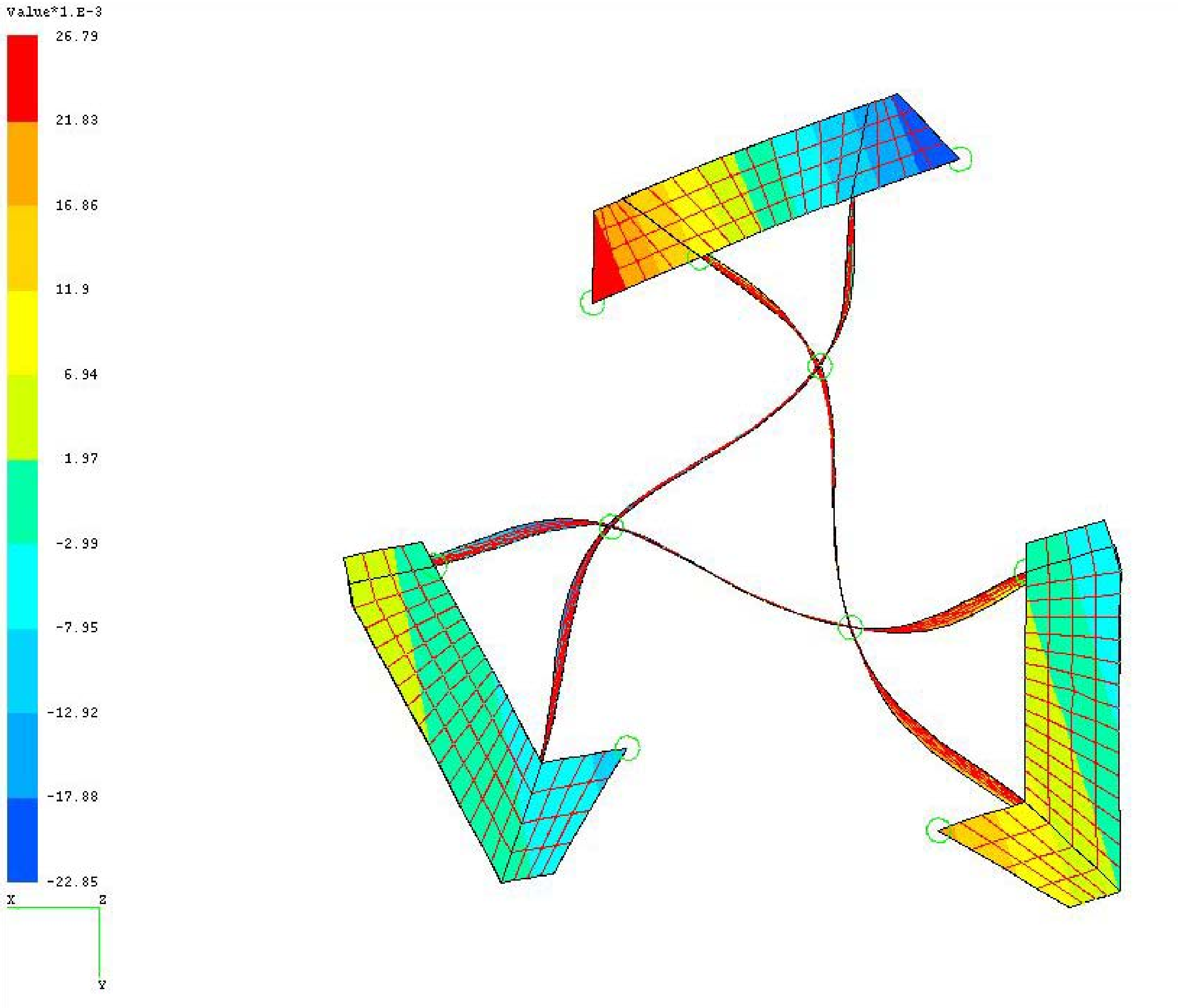

Picture 6-4 : Vertical Y displacements [mm]

6.2.1.2 *Stresses*

The maximum Von Mises stress in shell element is 1.742 MPa. It represents the maximum for the entire model.

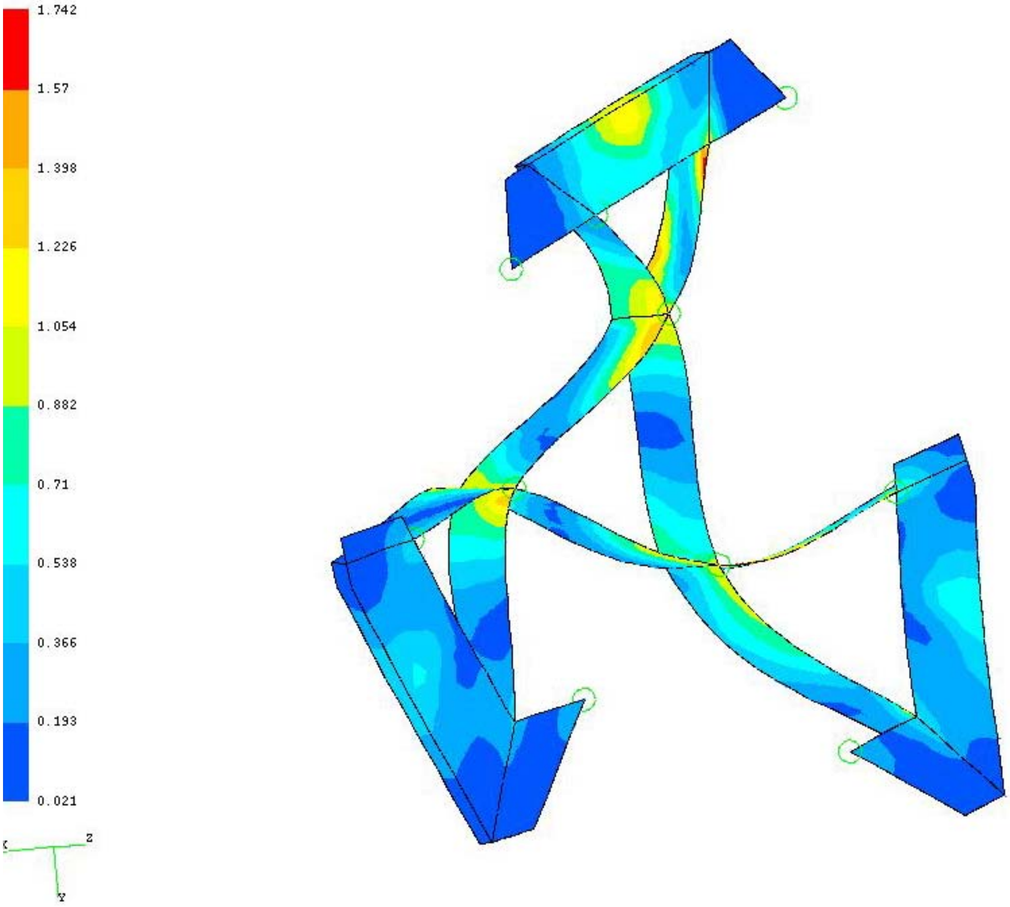

Picture 6-5 : maximum Von Mises stresses in shell elements [Mpa]

The maximum Von Mises stress , equal to 1.742, implies that the safety margins are positive.

$$SM_{yield} = \frac{\sigma_{yield\ \ stress}}{\sigma_{calculated} * 1.5} - 1 = \frac{215}{1.742 * 1.5} - 1 = 81.28 \rangle 0$$

$$SM_{ultimate} = \frac{\sigma_{ultimate\ \ stress}}{\sigma_{calculated} * 2} - 1 = \frac{340}{1.742 * 2} - 1 = 96.59 \rangle 0$$

S.A. AMOS
ADVANCED MECHANICAL AND OPTICAL SYSTEMS

LLOYD'S REGISTER QUALITY ASSURANCE · ISO9001
UKAS QUALITY MANAGEMENT 001

MULTI-APPLICATION SOLAR TELESCOPE

MAIN PERFORMANCE ANALYSES & ERROR BUDGETS

[CONTRACT NO: PRUS20060004600101 FE]

Doc. nr : AMOS/1967/01/10
Issue : 1.A
Date : 13/07/07

	NAME	DATE	SIGNATURE
Prepared by	Stefan DENIS	13/07/07	Stefan Denis
Checked by	Pierre GLOESENER	13/07/07	
Released by	Stefan DENIS	13/07/07	Stefan Denis

DISTRIBUTION LIST

Name	Company	Quantity
Archives	AMOS	original
Stefan DENIS	AMOS	1 copy
Prof. P. VENKATAKRISHNAN	PRL/USO	1 copy

CHANGE RECORD

ISSUE	DATE	NB OF PAGES	MODIFIED PAGES	REMARKS
1.0	13/07/07	13	initial issue	

TABLE OF CONTENTS

1. APPLICABLE & REFERENCE DOCUMENTS

Applicable and reference documents are defined here below. This includes documents and drawings.

1.1 APPLICABLE DOCUMENTS

ITEM	TITLE	REFERENCE	ISSUE	DATE
AD01	Tender Specification [PRL/04/05-06]	1967/03/01	-	22/12/05
AD02	User Requirements	1967/03/02	-	-
AD03	MAST Technical Proposal (AMOS)	D1660/technical	2.0	19/05/06
AD04	Compliance Matrix (revised)	-	-	01/06/06

1.2 REFERENCE DOCUMENTS

ITEM	TITLE	REFERENCE	ISSUE	DATE
RD01	Preliminary Optical Design Report	1967/30/01	1.A	13/07/07
RD02	Preliminary Mechanical Design Report	1967/30/02	1.A	13/07/07
RD03	Preliminary Thermal Design Report	1967/30/03	1.A	13/07/07
RD04	Preliminary Electrical Design Report	1967/30/04	1.A	13/07/07
RD05	Compliance Matrix (PDR issue)	1967/30/05	1.A	13/07/07
RD06	Preliminary TCS Design Report [OSL]	1967/30/06	1.A	13/07/07
RD07	Main Performance Analyses & Error Budgets	1967/01/10	1.A	13/07/07

1.3 REFERENCE DRAWINGS

ITEM	TITLE	REFERENCE	ISSUE	DATE
DWG01	General View	1967-00-00-00	A	13/07/07
DWG02	Building Interfaces	1967-00-00-90	A	13/07/07
DWG03	Polarimeter Interfaces	1967-10-00-90	A	13/07/07
DWG04	Tube General Assembly	1967-10-00-00	A	13/07/07
DWG05	Fork General Assembly	1967-20-00-00	A	13/07/07
DWG06	Ground Interface General Assembly	1967-30-00-00	A	13/07/07

2. ACRONYMS

ACE	:	Air-Conditioned Environment
AD	:	Applicable Document
Alt.	:	Altitude (axis)
Alt-Az.	:	Altitude-Azimuth (mount)
AMOS	:	Advanced Mechanical & Optical Systems
Az.	:	Azimuth (axis)
C	:	Compliant
DDR	:	Detailed Design Review
DWG	:	Drawing
FFOV	:	Full Field Of View
FOV	:	Field Of View
H/W	:	Hardware
HS	:	Heat Stop
I/F	:	Interface(s)
K-O	:	Kick-Off
MAST	:	Multi-Application Solar Telescope
mNC	:	marginally Non-Compliant
N/A	:	Not Applicable
NC	:	Non-Compliant
NFOV	:	Null Field Of View (= centre of the field)
OSL	:	Observatory Science Ltd.
PDR	:	Preliminary Design Review
pNC	:	partially Non-Compliant
PP	:	Polarimeter Package
PRL	:	Physical Research Laboratory (Govt. of India)
PTV	:	Peak-To-Valley
RD	:	Reference Document
RMS	:	Root Mean Square
RSS	:	Root Sum Square
S/W	:	Software
TBA	:	To Be Approved (by PRL/USO)
TBC	:	To Be Confirmed (by AMOS)
TBD	:	To Be Defined (by AMOS or PRL/USO)
TCS	:	Telescope Control System
USO	:	Udaipur Solar Observatory (PRL – Govt. of India)
WFE	:	WaveFront Error
WFS	:	WaveFront Sensor

3. SCOPE

This document forms a part of the analysis of the preliminary design done by AMOS for the MAST project. It is not intended at providing a thorough analysis of the telescope's design performance, but it rather defines the basic concepts, assumptions and interfaces taken into account by AMOS during the preliminary design phase.

This document should be considered as a living document. This preliminary design issue should even be considered as a draft version since most aspects of performance budgets at system level require a lot of calculation, and should take into account a frozen preliminary design (aim of the PDR).

Therefore, it is wise to wait for the acceptance of design concepts and a better definition of some design parameters prior to make detailed Performance & Error Budgets Analysis. This document shall thus be updated shortly after the PDR.

4. TELESCOPE DESIGN OVERVIEW

The Multi-Application Solar Telescope (MAST) is a 50 cm diameter class telescope to be installed on the USO island on the lake Fatehsagar in Udaipur, India. It is dedicated to solar observation.

The telescope is designed, manufactured, assembled and installed on-site by AMOS. It will be installed on the upper floor of the main existing building. Some appointments of the existing pier, dome and 2nd floor will be necessary for that purpose. Moreover, some additional equipment will be required on-site for proper operation of the telescope.

An overview of the MAST design outlines 3 categories of design elements that drive the structure of the document:

- the *telescope structure*, including the tube, fork and ground interface parts;
- the *mirror units*, including the primary mirror, the secondary mirror and the tertiary mirror units, the Coudé optics unit, the field derotator unit, the back-end folding unit, and the wavefront sensor pick-off unit;
- the *auxiliary equipment*, including a M1 cover and a M1 flushing system, the heat stop, an output pupil stop, a guider telescope, a wavefront sensor, the altitude and azimuth cable-wraps.

The implantation of the telescope in the existing building and the interfaces with the PRL/USO equipment and site also forms an important part of the design.

All the above mentioned design elements concern several aspects of the design:

- the optical design;
- the mechanical design;
- the thermal design;
- the electrical design.

Each of these design aspects is detailed in a separate document (see [RD01] to [RD04], as well as [RD06] for more design details).

5. SYSTEM SPECIFICATIONS

This section deals with the performance analysis and error budgets corresponding to the system specifications as per [AD01].

5.1 BEAM SIZE

Input beam size is required to be 50 cm diameter (clear aperture). This is provided by the size of the primary mirror: 550 mm mechanical diameter with optical clear aperture larger than 500 mm diameter. The primary mirror corresponds to the input pupil of the optical afocal system. Refer to [RD01] for a detailed discussion.

Output beam size is required to be 10 to 12 cm diameter corresponding to 6 arcmin FOV. This specification lacks the location where it applies. Indeed, for a collimated beam, the size is increasing from the output pupil due to field spread.

Nevertheless, this specification comes in conflict with the beam size specification for the polarimeter package (5 cm diameter, modified to 5 to 6 cm). The reason is again the field spread of the beam footprint increasing with distance from the output pupil.

It is shown in [RD01] that fulfilling both requirements (system output beam size and beam size at polarimeter level) is not possible at once. Moreover, it is also shown in [RD01] that fitting within final output beam size requirement at back-end instruments location requires unrealistic optical path length from output pupil location (< 4 m).

Refer to [RD01] for a detailed discussion.

5.2 WAVEFRONT ERROR

Output wavefront error shall be better than $\lambda/12$ rms on-axis, $\lambda/10$ rms over FOV, and $\lambda/4$ ptv, all requirements at 632,8 nm.

A preliminary RMS WFE budget – also part of this document – is presented in [RD01]. It shows compliance with the above requirement, with contingencies.

Refer to [RD01] for a detailed discussion.

5.3 STRAY-LIGHT

Stray-light irradiance shall be less than 0,2 % of solar flux (allowing for twice sky brightness) in output beam.

Stray-light has not been considered during the preliminary design phase, since the analysis requires opto-mechanical inputs, which are barely available at PDR level.

Moreover, stray-light analysis is quite a complex process not to run again and again. Therefore, the stray-light analysis will be conducted during the detailed design phase, based on a well-established and agreed preliminary design.

5.4 IMAGE STATIONARITY

An image rotator (i.e. field derotator) shall maintain the stationarity of FOV in output beam with a maximum movement less than 0,01 arcsec per minute.

This requirement is directly related to the field derotator motion, and hence to the corresponding rotation stage's encoder. Analysis of the performance associated to this requirement requires thus some investigation on the rotation stage in relation with TCS aspects (field derotation curve associated with solar motion).

This will be performed during the first steps of the detailed design.

5.5 OUTPUT BEAM VIBRATION

Vibration of output beam (seeing excluded) shall be:

- less than 1 arcsec rms in [0 – 1] Hz bandwidth,
- less than 0,5 arcsec rms in [1 – 10] Hz bandwidth,
- less than 0,05 arcsec rms for frequencies higher than 10 Hz.

This requirement is driven by angular motion of the whole telescope with respect to the stationary output reference frame (pier), and angular motion of flat folding mirrors. An analysis should be performed during detailed design phase to check that vibrations induced by the telescope itself in operating conditions comply with the requirement.

5.6 SYSTEM SIZE

System length (M2 to M3) shall be less than 2 m. System height (elevation axis to output beam) shall be less than 2 m.

Both requirements are fulfilled since the distance between M2 and M3 (i.e. between M2 and the elevation axis) is about 1,8 m, while the height of the elevation axis with respect to the output beam is 2 m.

Refer to [RD01] for a detailed discussion.

5.7 TOTAL TRANSMISSION

Total transmission shall be more than 50 % in wavelength range [400 – 900] nm.

A preliminary global transmission budget – also part of this document – is presented in [RD01]. It shows compliance with the above requirement, with useful contingencies.

Refer to [RD01] for a detailed discussion.

6. SUBSYSTEMS SPECIFICATIONS

This section deals with the performance analysis and error budgets corresponding to the subsystem specifications as per [AD01].

6.1 OPTICAL COMPONENTS

All requirements regarding optical components (see [AD01]) are expected to be fulfilled at this preliminary design level.

Refer to [RD01] for a detailed discussion.

6.2 MECHANICAL ASSEMBLY

The mechanical design of the telescope shall correspond to an Alt.-Az. mount concept, with azimuth range of [85° - 275°] reckoned from North in the sense NESW, and with altitude range of [5° - 88,5°] (3° zenithal avoidance zone. Moreover, all mechanical parts shall be maintained within 1°C of ambient.

Mechanical, electrical and thermal design (see [RD02], [RD03], and [RD04]), as well as TCS design (see [RD06]), take into account the above requirement.

One should only notice that the temperature departure from ambient is only considered for mechanical parts that are close to the optical beam and that could impact seeing.

6.3 DRIVE SYSTEM (POINTING & TRACKING)

The drive system's requirements concern the pointing, tracking, and secondary mirror's mechanism.

Optically, one can consider three aspects related to pointing (and tracking):

- primary image provided by the primary mirror;
- field selected by the heat-stop (= field-stop);
- primary image and selected field transmitted to instruments by relay optics (M2-M6).

Actually, the pointing direction directly corresponds to the direction of the primary mirror's optical axis (an offset can be considered). Tracking thus refers to the continuous equivalence of the optical axis direction with the direction of the tracked object.

Mechanically, pointing (and tracking) errors correspond to inaccuracy in the relation between the setting/knowledge of mechanical altitude and azimuth axes on one hand, and the actual direction of the primary mirror's optical axis on the other hand.

This includes errors directly related to the mechanical axes (bearing quality, encoder accuracy, axes alignment), tilt errors of the primary mirror in its cell and with respect to tube's theoretical axis, and pointing model's errors (astronomical model, calibration).

Motion of the heat-stop only affects the field pre-selection[1] around the pointed target. If it is small enough, one can define a sufficiently large (≥ 6 arcmin) FOV, unaffected by heat-stop motion and limited by sharp edges, at instrument level. Thus, heat-stop motion with respect to primary image (tube deflection, thermal expansion) does not affect pointing and tracking.

The primary image is collimated by the secondary mirror and relayed by a suite of folding mirrors. Motion (tilt) of these mirrors during telescope operation does not affect pointing actually. It only impact output beam stability as a whole (all field points are moving together). This is thus more related to output beam vibration (§.5.5).

All requirements are understood as angular values on the sky (thus magnified by a 10:1 ratio at afocal telescope's output).

6.3.1 Pointing

Pointing accuracy (from any "parking" position) shall be better than 10 arcsec, while differential pointing accuracy (from a position defined by one user) shall be less than 0,5 arcsec[2].

Pointing accuracy (both "one-shot" and differential) is based on the establishment of a pointing model for the TCS. This pointing model will be initialised based on almanacs. It is foreseen to enhance the pointing model thanks to its calibration on stars at night.

Requirements regarding pointing accuracy are not critical (see [RD06]). A performance analysis and error budget shall be conducted during the detailed design phase.

The error budget should include the following parameters:

- azimuth and altitude bearings quality (including drive),
- encoders accuracy,
- mechanical axes alignment (initial and operational),
- primary mirror's axis motion (with respect to mechanical axes),
- pointing model errors (almanac),
- calibration errors (pointing model, environment).

A more detailed analysis of pointing aspect should be provided in update of this document after the PDR.

---

[1] heat-stop hole does not correspond exactly to the 6 arcmin field because of the aberrated primary image

[2] differential pointing is understood as changing the pointing setting within a field corresponding to one-and-a-half solar disk diameter

6.3.2 Tracking

Open-loop tracking (using pointing model) shall be better than 0,25 arcsec rms over 10 minute periods and better than 0,05 arcsec rms for 1 s periods in operating conditions.

Closed-loop tracking (using guider system) shall be better than 0,1 arcsec rms for 1 hour periods in operating conditions.

Open-loop tracking is based on the pointing model mentioned in §.6.3.1. It exhibits basically the same contributors as pointing, with accent on time-dependant parameters (thus mainly the pointing model).

Open-loop tracking performance essentially depends on the position of the sun. It is more critical on days and times when the sun is close to the zenith. Partial non-compliance is expected (TBC) then. This should only concern slight degradation of the performance on limited observations.

Refer to [RD06] for a more detailed discussion.

Closed-loop tracking also involves guider system's accuracy. Non-compliance is possible (TBC). Refer to [RD01] and [RD06] for more detailed discussion.

A more detailed analysis of tracking aspect should be provided in update of this document after the PDR.

6.3.3 Secondary Mirror's Mechanism

Secondary mirror's mechanism system shall maintain the specified quality of output beam in operating conditions.

This will be performed thanks to the required M2 mechanism (hexapod – see [RD02], [RD04] and [RD06]). This mechanism could operate:

- in open-loop based on model tables (matrix) established by FEA and/or calibration;
- in closed-loop based on wavefront sensor information (Zernike coefficients).

A more detailed analysis of secondary mirror's mechanism aspect – and associated wavefront sensor - should be provided in update of this document after the PDR. This however concerns the wavefront budget (§.5.2) that already include provision for misalignment (including wavefront sensor and hexapod operational accuracy).

6.4 ENVIRONMENTAL PARAMETERS & OPERATING CONDITIONS

Environmental conditions (affecting operational performance) concern:

- the operational temperature,
- the relative humidity,
- the wind speed

Operational temperature is obviously critical and has been much accounted during the preliminary design. Thermal analysis is performed in [RD03] according to typical meteorological conditions (including daytime temperature evolution) along the year. It could arise that abnormal conditions (e.g. very fast temperature variation around the normal day curve) cannot be handled by the thermal system. This should correspond to periods of impossible or difficult observation anyway.

Relative humidity is not a critical concern regarding design issues.

Wind speed has not been considered during this preliminary design phase since the specification mention only a very slow maximum speed (30 km/h).

MULTI APPLICATION SOLAR TELESCOPE

FOR

UDAIPUR SOLAR OBSERVATORY INDIA

Mirror Support

Doc. nr : **AMOS/1967/01/11**

Issue : **1**

Date : **20th June 2007**

	NAME	DATE	SIGNATURE
Prepared by	J-M. SCHUMACHER		
Checked by	C. DELREZ		
Released by	S. DENIS		

DISTRIBUTION LIST

Name	Company	Quantity
Archives	AMOS	original

CHANGE RECORD

ISSUE	DATE	NB OF PAGES	MODIFIED PAGES	REMARKS
1	20/06/07			PDR issue

TABLE OF CONTENTS

1. SUMMARY

1.1 SCOPE

The present document deals with the design of the different mirrors and supports of the MAS telescope. It focuses on opto-thermo-mechanical performances as, with respect to the overall weight and dimensions of the mirrors and cells, we do not suspect any purely mechanical problem to arise (stress, strain etc ...)

There are 9 mirrors in the optical path but the PDR analyses have been restricted to four typical mirrors which seem to cover most design envelopes :

M1, off axis and largest mirror
M2, off axis mirror
M3, flat mirror
M5, largest flat mirror made of SiC

1.2 CONCLUSIONS

All investigated mirror baselines are within the specified optical budgets.

Next steps :
- complete baseline design for all mirrors
- perform sensitivity analyses
- AIV error budget predictions

2. M1

The primary mirror is a monolithic piece of Zerodur :

Zerodur

Young's modulus	9.03E+10 N/m^2
Poisson ratio	0.24
Typical average thermal expansion ratio	7.3E-08 K^{-1}
Density	2530 kg/m^3

The mirror blank is defined by the following steps :
The outer edge on the rear surface is a circle.
The rear surface itself is a portion of a sphere of radius 4179.2mm
The lateral surface of the mirror is of cylindrical shape of radius 280mm
The mirror presents a roughly constant thickness of 50mm.
The front (optical) surface is an off-axis parabola defined by the optical specifications.
The mirror blank weights about 30 kg.

This meniscus option was chosen over a "trunk option with variable blank thickness" for thermal regulation matters as preliminary analyses showed an impossibility to accurately regulate the mirror front surface without a constant mirror thickness.

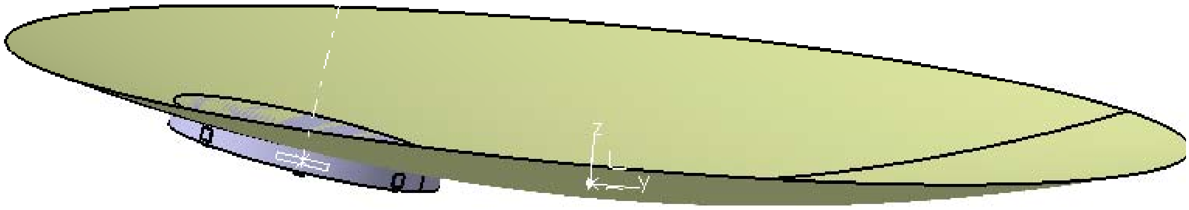

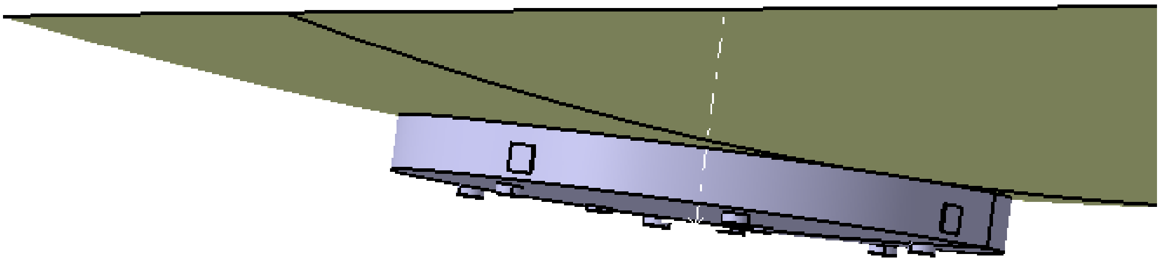

The axial support is made of 9 points distributed on 2 circles.
9 pads made of Invar steel are glued on the mirror rear side.
Invar steel has a very low thermal expansion coefficient fully compatible with zerodur over the expected temperature range.

Invar steel

Young's modulus	1.40E+11 N/m^2
Poisson ratio	0.26
Thermal expansion ratio	1.3E-06 K^{-1}
Density	8130 kg/m^3

The 9 points are interconnected by means of a whiffle tree system made of 3 independent trees. The connection between the trees and the Invar pads are made by titanium needles which are designed to have neglectable lateral stiffness while presenting enough resistance to support the axial weight of the mirror.

Titanium

Young's modulus	1.14E+11 N/m^2
Poisson ratio	0.34
Thermal expansion ratio	8.6E-06 K^{-1}
Density	4430 kg/m^3

The 3 endpoints of the 3 whiffle trees are fixed onto the mirror cell and act as axial definers. These endpoints are connected to the cell by means of 3 internal universal joints providing high translation stiffness and neglectable rotational stiffness in all axes. They fix thus the mirror free-free modes along TZ, RX & RY.

The actual cell is a welded assembly basically made of 3 carbon steel plates and 3 small tubes that receive the 3 endpoints of the whiffle tree.

The whole concept ensures that all 9 points are connected to the mirror in a quasi-isostatic way, each point giving the expected axial supporting forces while being totally decoupled from the lateral support system thanks to the titanium needles. This concept has proven to give excellent supporting results in different projects managed by AMOS.

The lateral support system is made of 4 a-static levers and 3 lateral definers.
The a-static lever system is a simple but effective way to apply a lateral load on the mirror which varies automatically with the altitude angle of the telescope. Each a-static lever applies the load by means of a titanium needle which is bolted to an Invar pad which in turn is glued on the lateral mirror surface. This is very similar to the axial support principle. Here as well, the needle design prevents cross-coupling between the lateral and axial support systems.

It should be noted that the β value used in the Schwesinger concept is 0.5 here as all 4 levers are implemented parallel to the elevation plane (i.e. parallel to the YZ plane). Finite element analyses showed low sensitivity of the opto-mechanical performances to other β values. The advantage of this purely uni-directional system in turn is the total lack of stick-slip effect which may occur when bearing axes of the levers are not parallel to a telescope elevation axis. Moreover, the levers here act in a plane perpendicular to the optical axis, i.e. there is no axial (out of plane) force component which is often required when supporting larger mirrors. The levers are distributed at 4x90° around the outer edge of the mirror.

In addition, 3 lateral definers are implemented on the outer edge of the mirror.
They fix the mirror free-free modes along TX, TY & RZ complementary to the 3 modes fixed by the axial definers. Again, the 3 definers are made of titanium needles featuring a non-neglectable stiffness only along the desired direction (which is tangential in this case).

Finally it should be pointed out that the entire mirror cell is perpendicular to the local optical axis pointing from M1 towards M2. As a result, the cell is inclined by roughly 8° around an axis parallel to the elevation axis when the telescope is pointing at zenith. When pointing at horizon, the cell presents a negative angle, the mirror hanging "upside-down" by about 8°. A direct consequence is that the mirror has to be firmly attached to the axial needles (as opposed to simply resting on them).

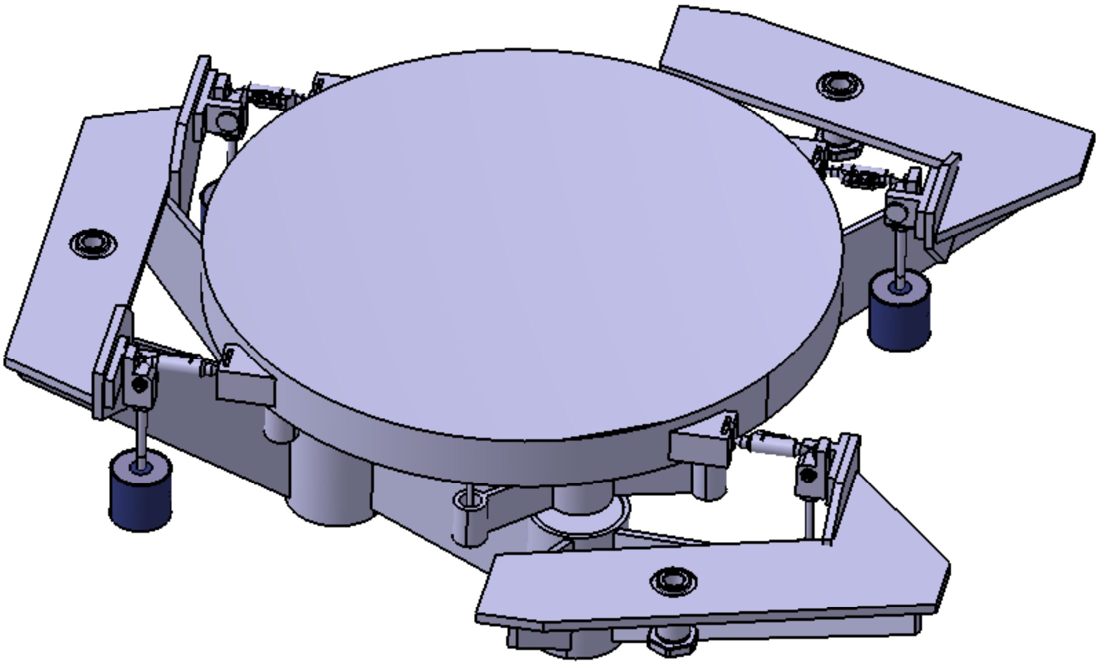

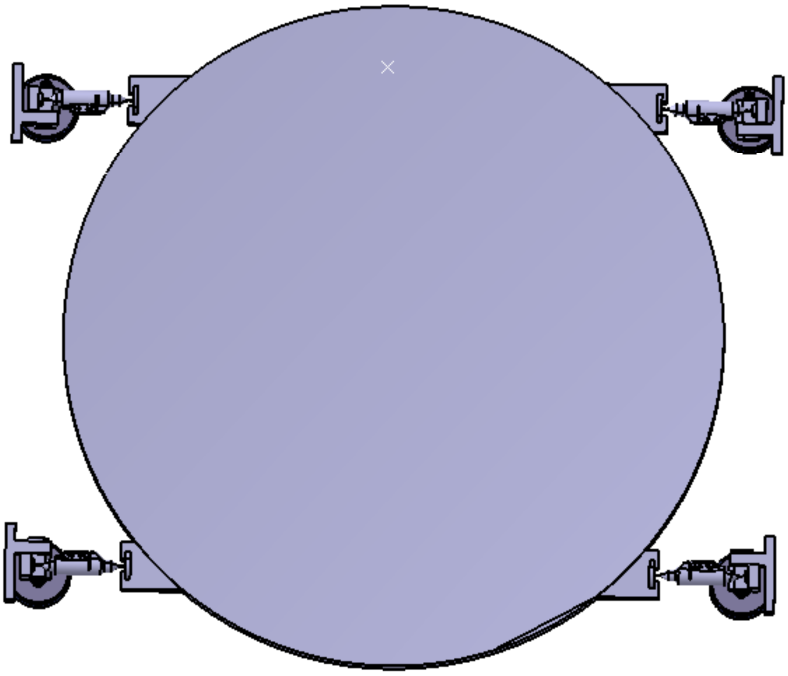

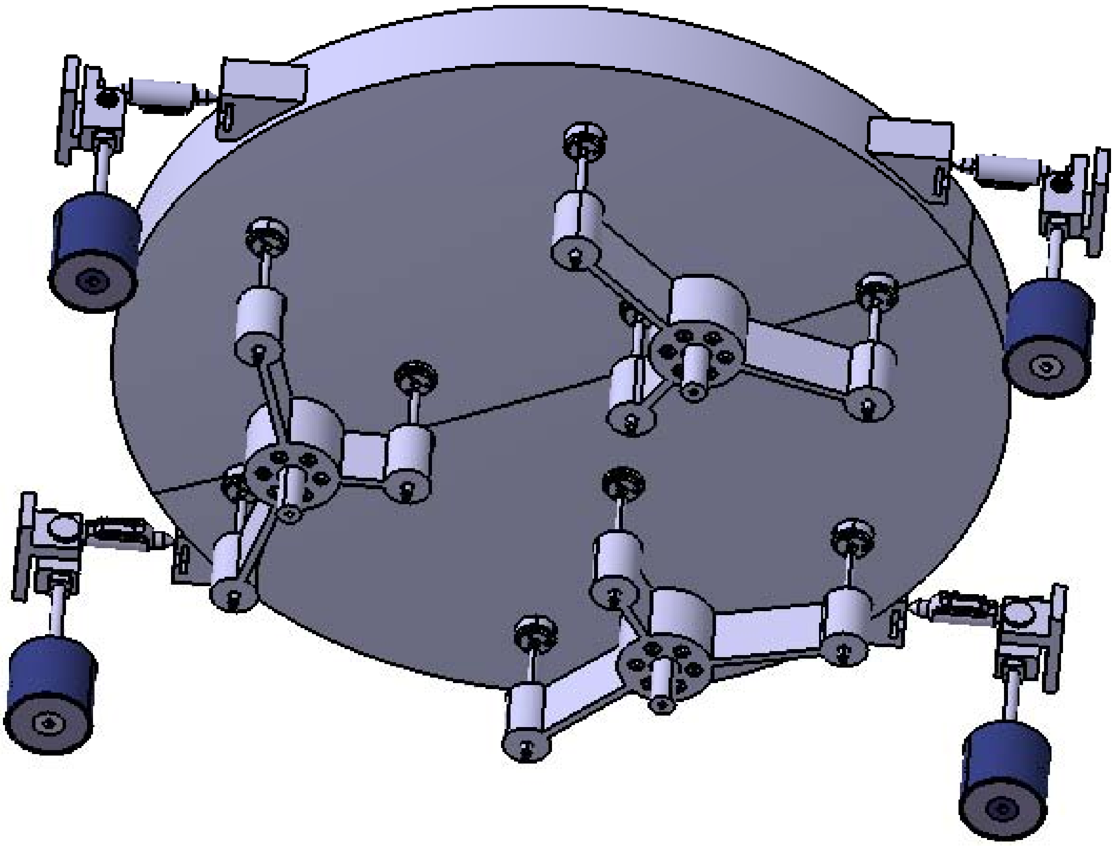

A finite element model is made based on the above design.
The mirror is made of volumic elements, the titanium needles are modeled by equivalent beam elements, the trees are also made of equivalent beams, the universal joint is represented by a punctual spring element with the given stiffness.

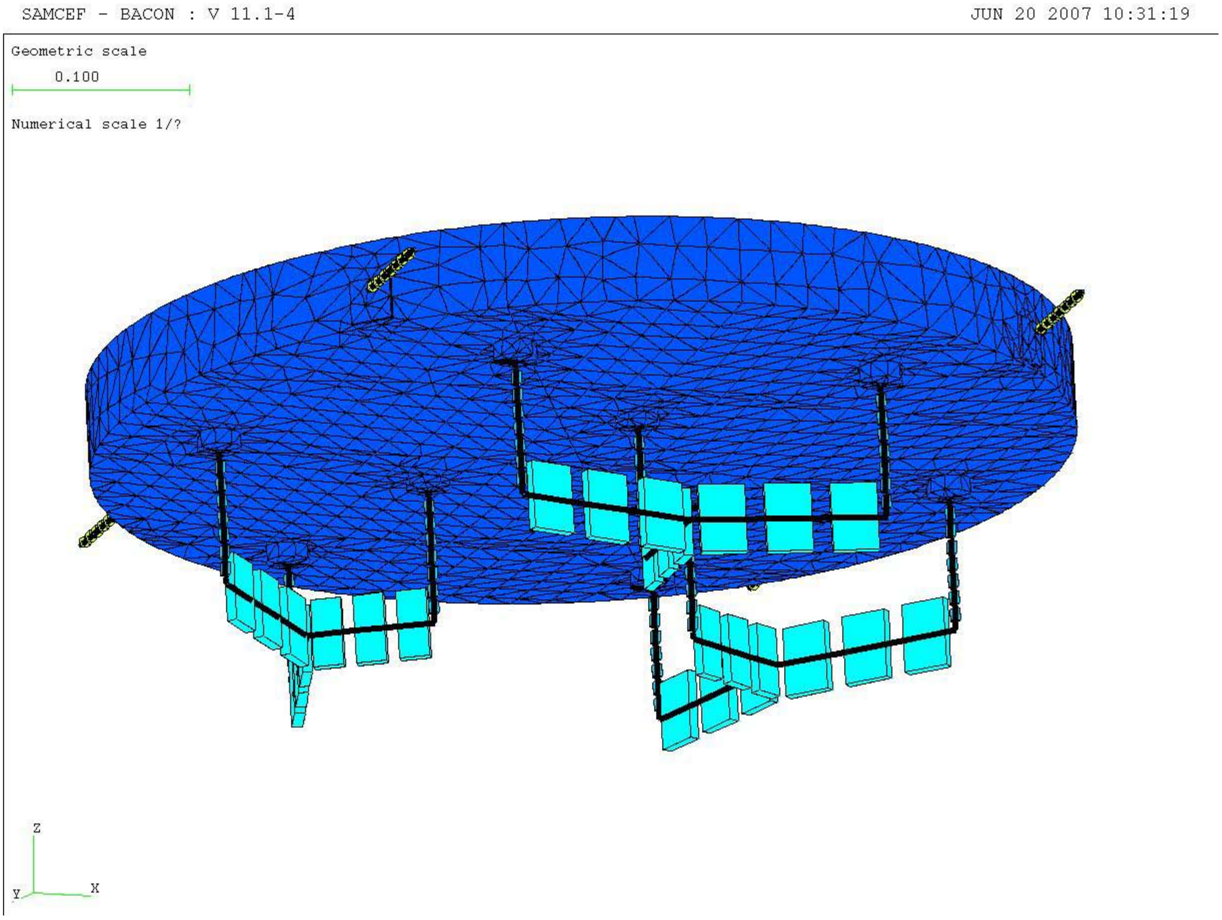

The cell, summarized by some beam elements (in yellow in the figure below) is only representative of its real thermal behaviour. It is considered infinitely stiff for all other mechanical analyses.

Also, the lateral fixed points are not yet included in this PDR FEM model, but this should not have any significant impact on the results as these fixed points are foreseen not to carry any load anyway.

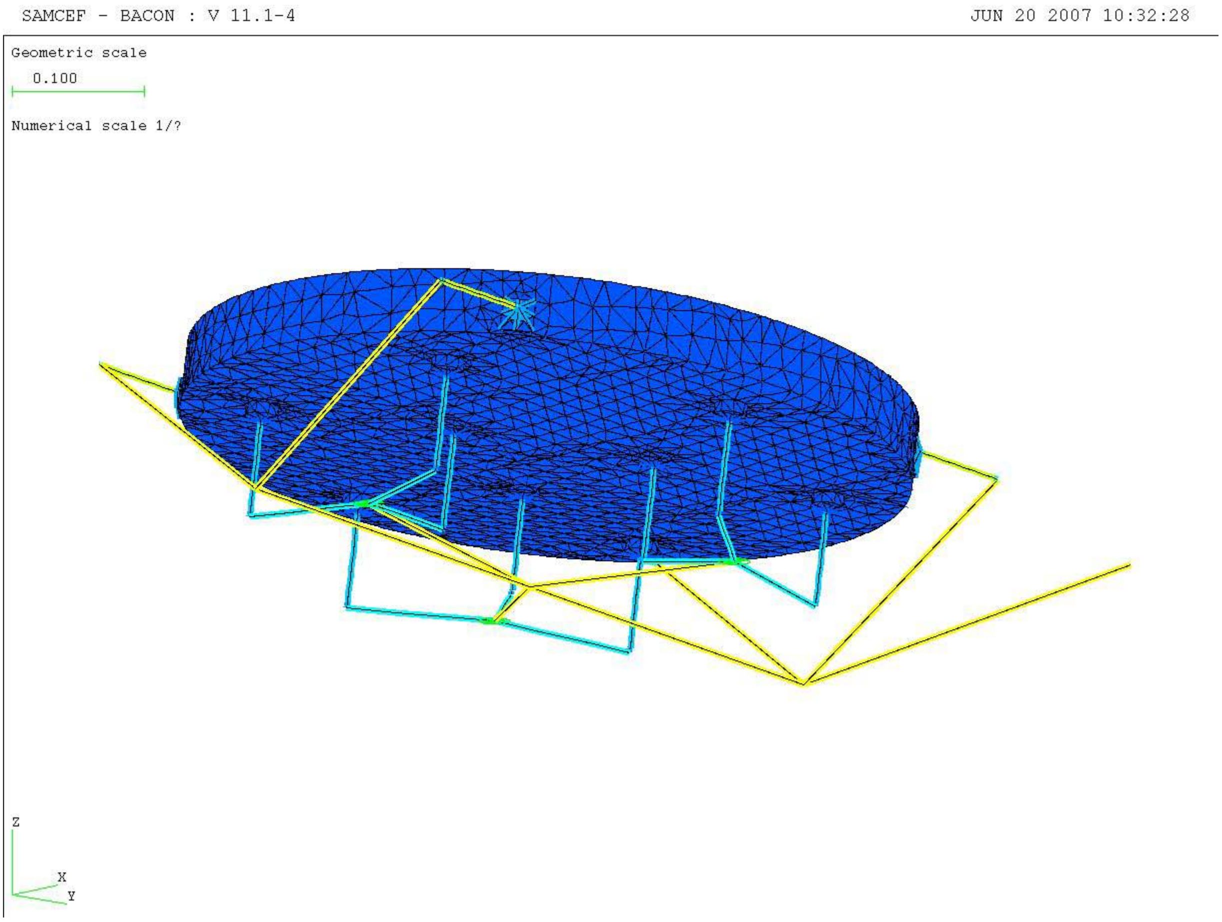

Analyses results

Internal budget for support and integration is 14 nm RMS WFE, i.e. **7nm RMS SFE**
This budget does not include piston, tilts and global focus (i.e. spherical defocus centred on the parabola axis). These terms are compensated for by the M2 hexapod movements.

The M1 PDR baseline gives the following opto-mechanical results :

Axial gravity = 4.7 nm RMS SFE
Lateral gravity = 4.2 nm RMS SFE
Thermal load +50°C = 1.0 nm RMS SFE

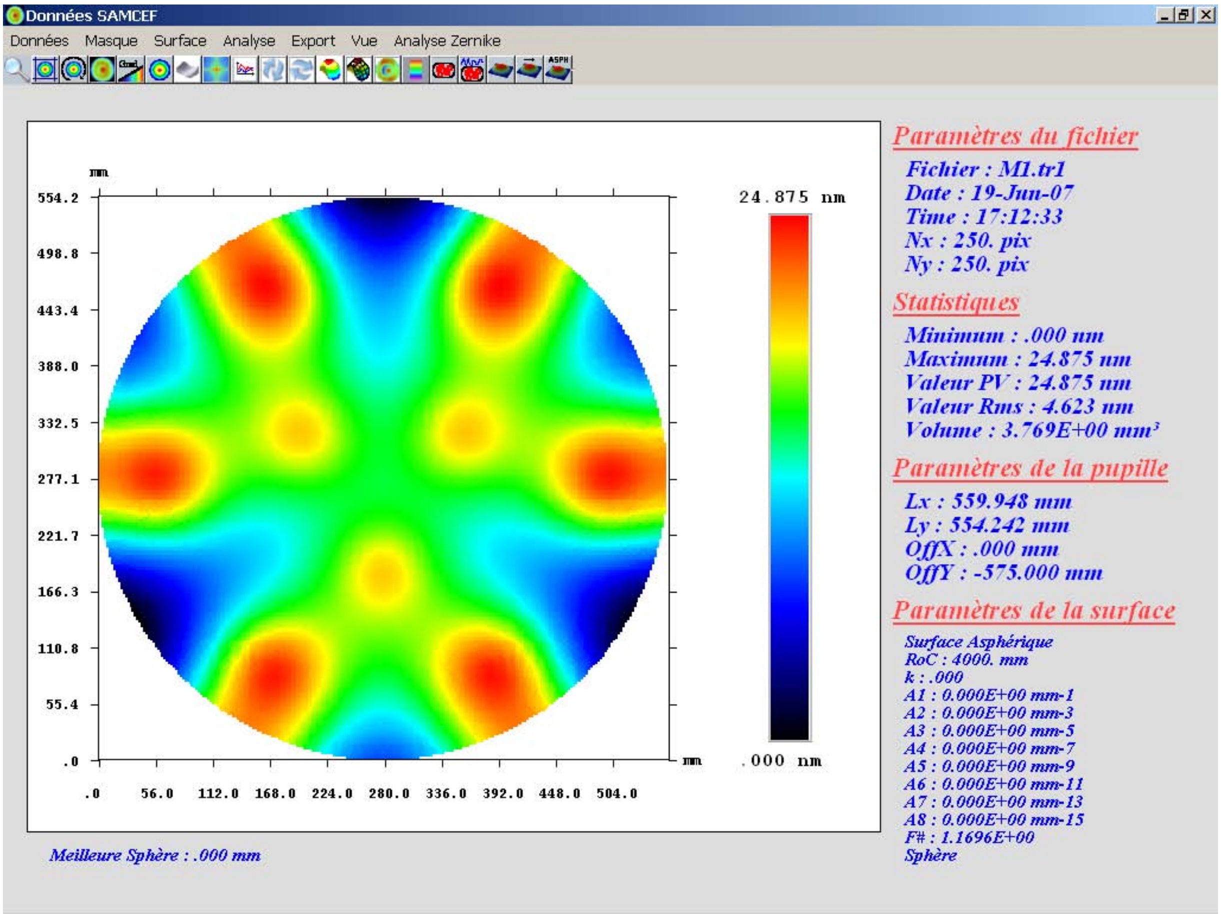

Paramètres du fichier
Fichier : M1.tr1
Date : 19-Jun-07
Time : 17:12:33
Nx : 250. pix
Ny : 250. pix

Statistiques
Minimum : .000 nm
Maximum : 24.875 nm
Valeur PV : 24.875 nm
Valeur Rms : 4.623 nm
Volume : 3.769E+00 mm³

Paramètres de la pupille
Lx : 559.948 mm
Ly : 554.242 mm
OffX : .000 mm
OffY : -575.000 mm

Paramètres de la surface
Surface Asphérique
RoC : 4000. mm
k : .000
A1 : 0.000E+00 mm-1
A2 : 0.000E+00 mm-3
A3 : 0.000E+00 mm-5
A4 : 0.000E+00 mm-7
A5 : 0.000E+00 mm-9
A6 : 0.000E+00 mm-11
A7 : 0.000E+00 mm-13
A8 : 0.000E+00 mm-15
F# : 1.1696E+00
Sphère

Meilleure Sphère : .000 mm

Axial gravity : 4.7nm RMS SFE

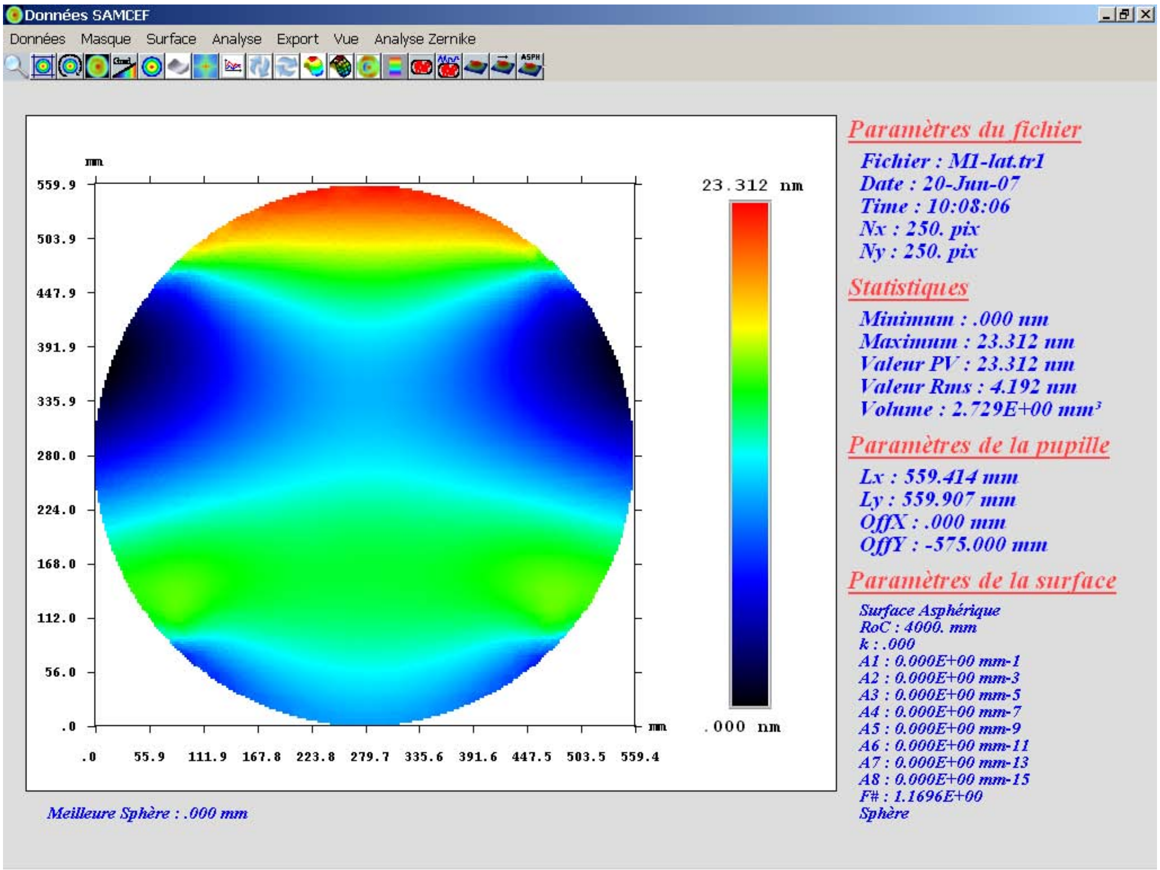

Paramètres du fichier
Fichier : M1-lat.tr1
Date : 20-Jun-07
Time : 10:08:06
Nx : 250. pix
Ny : 250. pix

Statistiques
Minimum : .000 nm
Maximum : 23.312 nm
Valeur PV : 23.312 nm
Valeur Rms : 4.192 nm
Volume : 2.729E+00 mm³

Paramètres de la pupille
Lx : 559.414 mm
Ly : 559.907 mm
OffX : .000 mm
OffY : -575.000 mm

Paramètres de la surface
Surface Asphérique
RoC : 4000. mm
k : .000
A1 : 0.000E+00 mm-1
A2 : 0.000E+00 mm-3
A3 : 0.000E+00 mm-5
A4 : 0.000E+00 mm-7
A5 : 0.000E+00 mm-9
A6 : 0.000E+00 mm-11
A7 : 0.000E+00 mm-13
A8 : 0.000E+00 mm-15
F# : 1.1696E+00
Sphère

Meilleure Sphère : .000 mm

Lateral gravity : 4.2nm RMS SFE

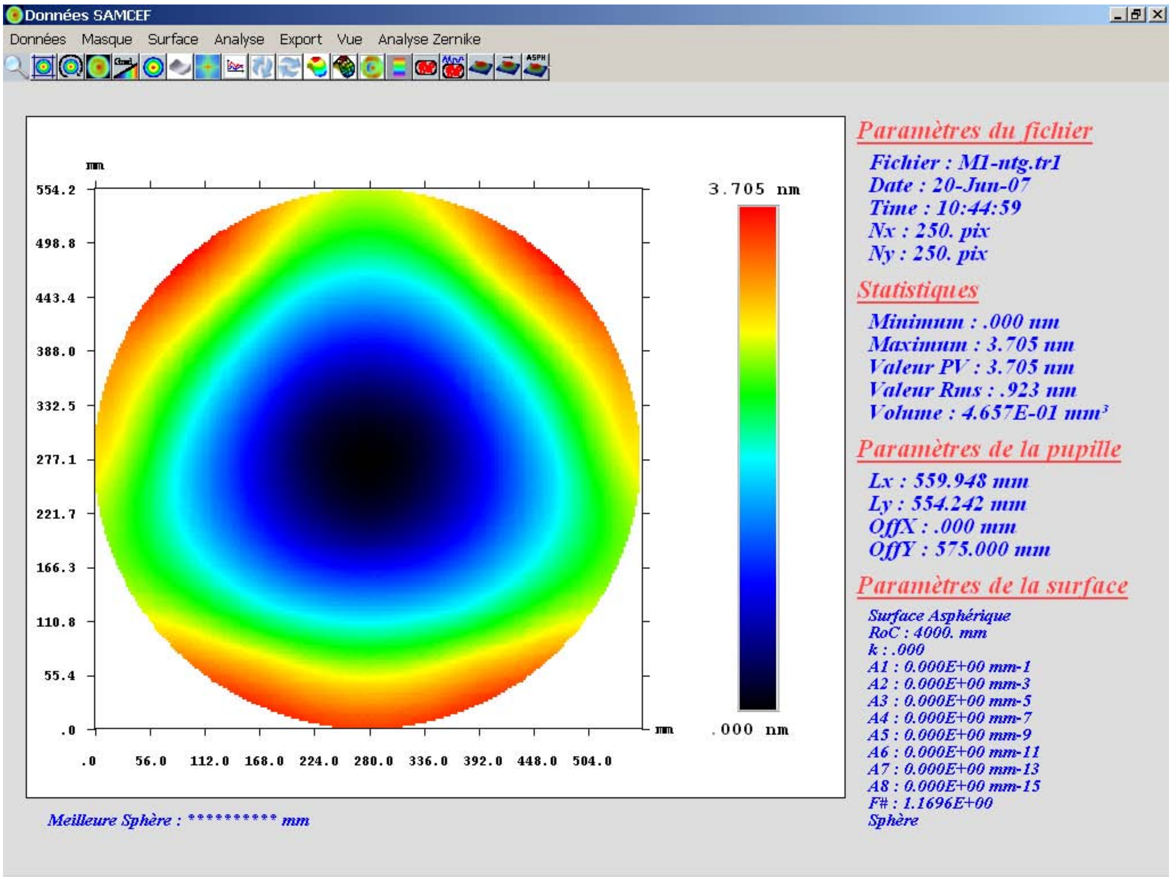

Paramètres du fichier

Fichier : M1-ntg.tr1
Date : 20-Jun-07
Time : 10:44:59
Nx : 250. pix
Ny : 250. pix

Statistiques

Minimum : .000 nm
Maximum : 3.705 nm
Valeur PV : 3.705 nm
Valeur Rms : .923 nm
Volume : 4.657E-01 mm³

Paramètres de la pupille

Lx : 559.948 mm
Ly : 554.242 mm
OffX : .000 mm
OffY : 575.000 mm

Paramètres de la surface

Surface Asphérique
RoC : 4000. mm
k : .000
A1 : 0.000E+00 mm-1
A2 : 0.000E+00 mm-3
A3 : 0.000E+00 mm-5
A4 : 0.000E+00 mm-7
A5 : 0.000E+00 mm-9
A6 : 0.000E+00 mm-11
A7 : 0.000E+00 mm-13
A8 : 0.000E+00 mm-15
F# : 1.1696E+00
Sphère

Meilleure Sphère : ********** mm

Thermal load (+50°C) : 1nm RMS SFE

3. M2

The M2 mirror is made of silicon carbide (SiC) :

SiC	
Young's modulus	4.20E+11 N/m^2
Poisson ratio	0.16
Thermal expansion ratio	4.0E-06 K^{-1}
Density	3200 kg/m^3

The mirror shape is a cylindrical trunk whose axis of revolution is parallel to the tube axis.
It features a thermal regulation plate which is designed to minimize mechanical distortion on the front face during operation.
Outer diameter of optical surface : Ø70mm
Optical surface thickness (centre-minimum-maximum) : 20-15-26 mm
Thermal plate : triangular shape, 5mm thick, Ømax 100mm
Diameter of the connection : Ø30mm

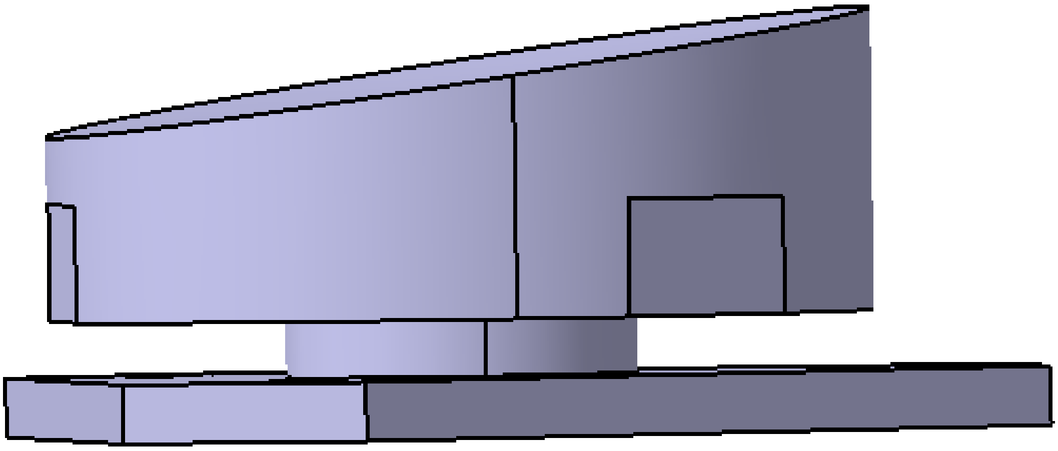

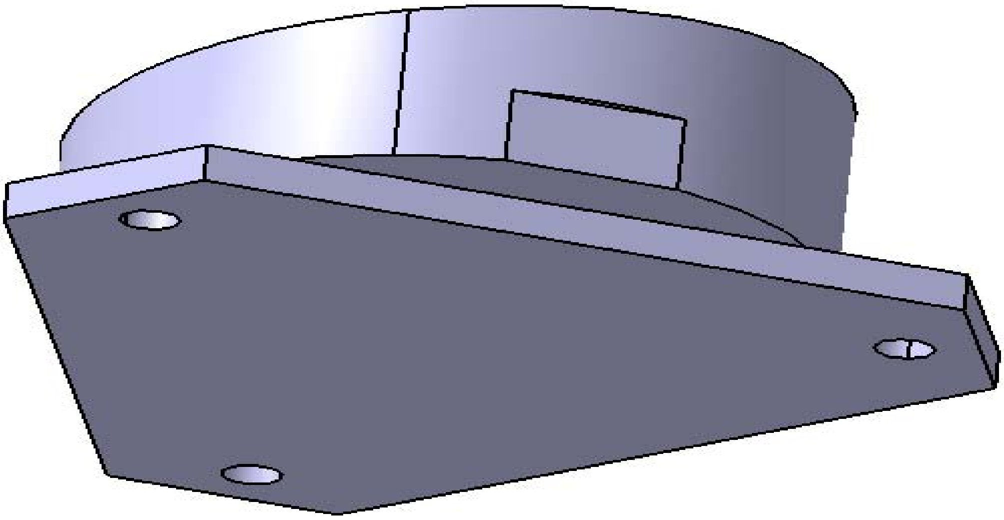

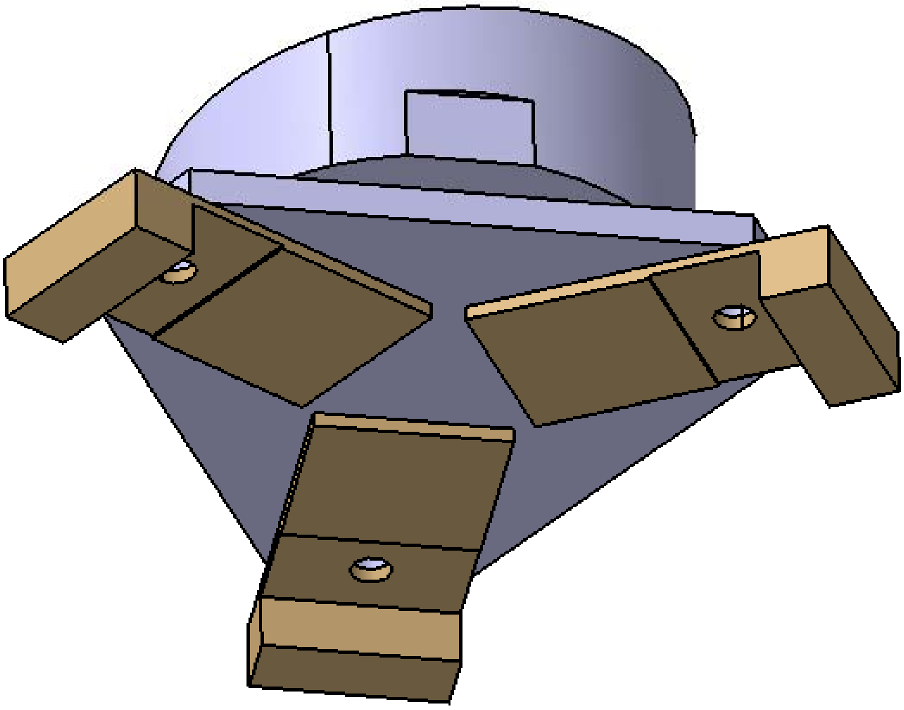

Schematic view of the thermal regulation system made of 3 copper straps.

Eventually, the mirror is connected to the hexapod by means of 3 flexures 40x15x0.4mm , made of spring steel .

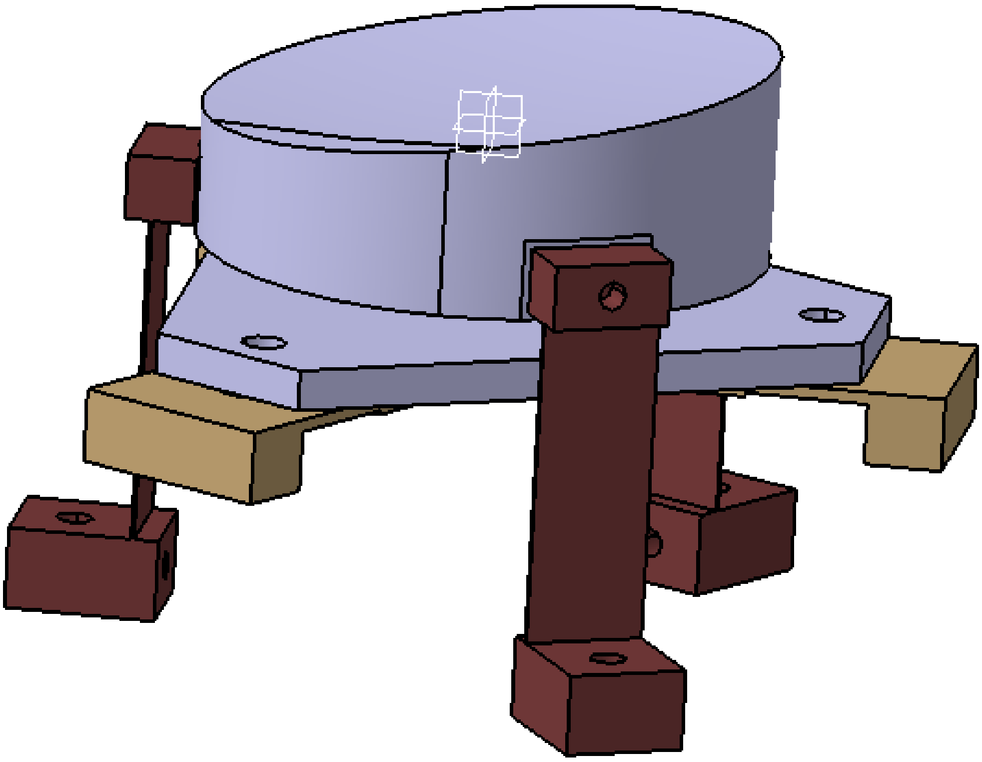

A finite element model is created on the above design.
All parts are represented by means of volumic elements save the flexures modeled by means of equivalent beam elements.
The flexures are directly connected on to the hexapod interface which is summarized by 3 beams and only representative of its thermal behaviour.
It is considered infinitely stiff for all other mechanical analyses.

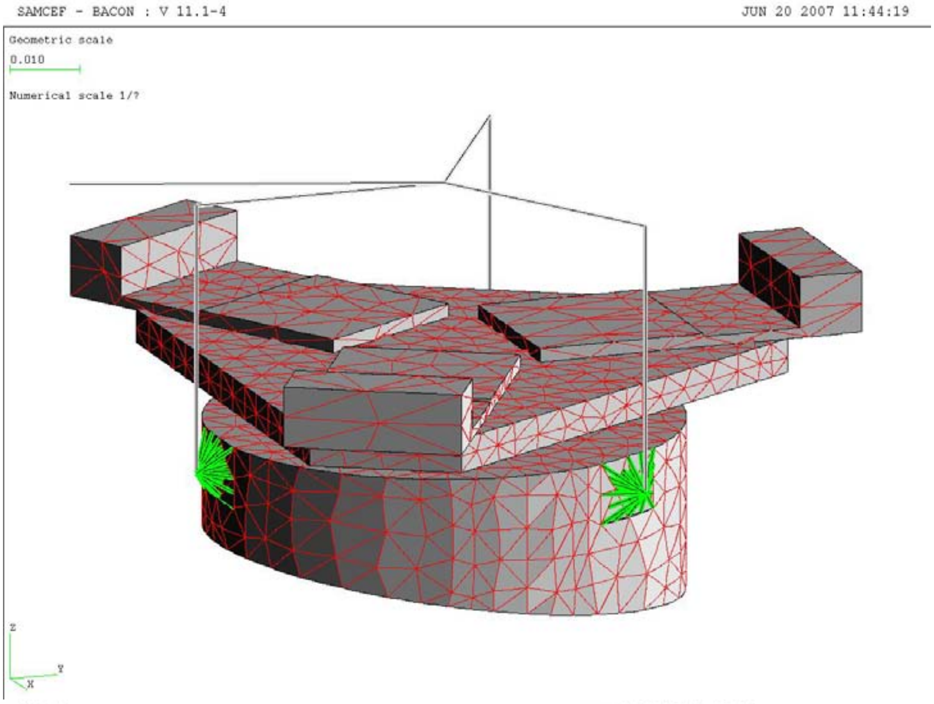
SAMCEF - BACON : V 11.1-4
JUN 20 2007 11:44:19
Geometric scale
0.010
Numerical scale 1/?
Z
Y
X

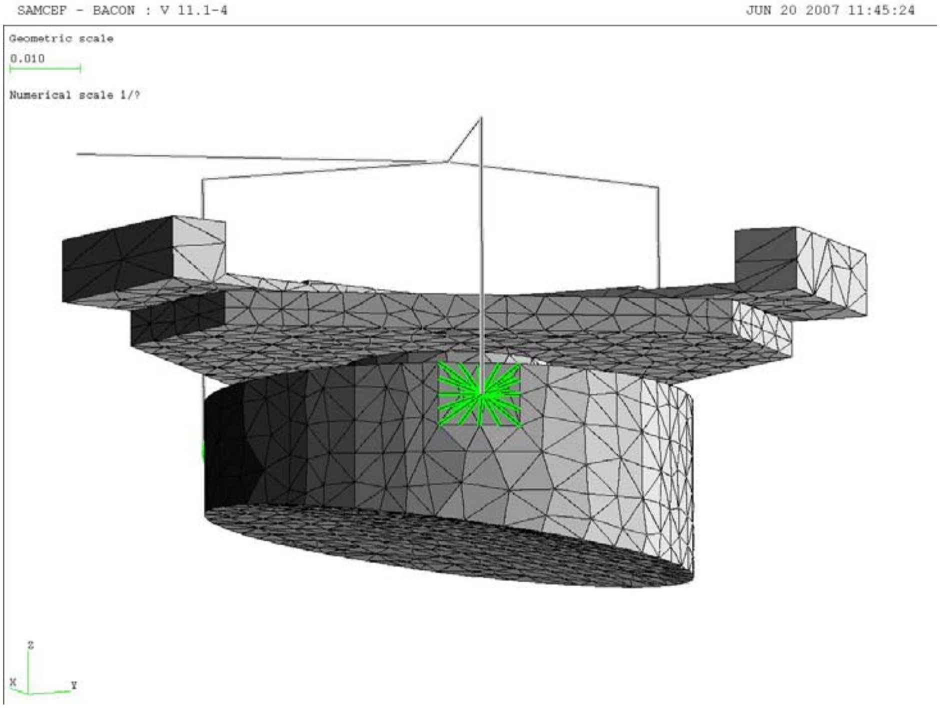
SAMCEF - BACON : V 11.1-4
JUN 20 2007 11:45:24
Geometric scale
0.010
Numerical scale 1/?
Z
X
Y

Analyses results

Internal budget for support and integration is 5 nm RMS WFE, i.e. **2.5nm RMS SFE** This budget does not include piston, tilts and global focus (i.e. centred on the M1 parabola axis). The latter terms are compensated by the hexapod movements.

The M2 PDR baseline gives the following opto-mechanical results :

Axial gravity = 0.3 nm RMS SFE
Lateral gravity = 0.8 nm RMS SFE
Thermal load +50°C = 0.2 nm RMS SFE

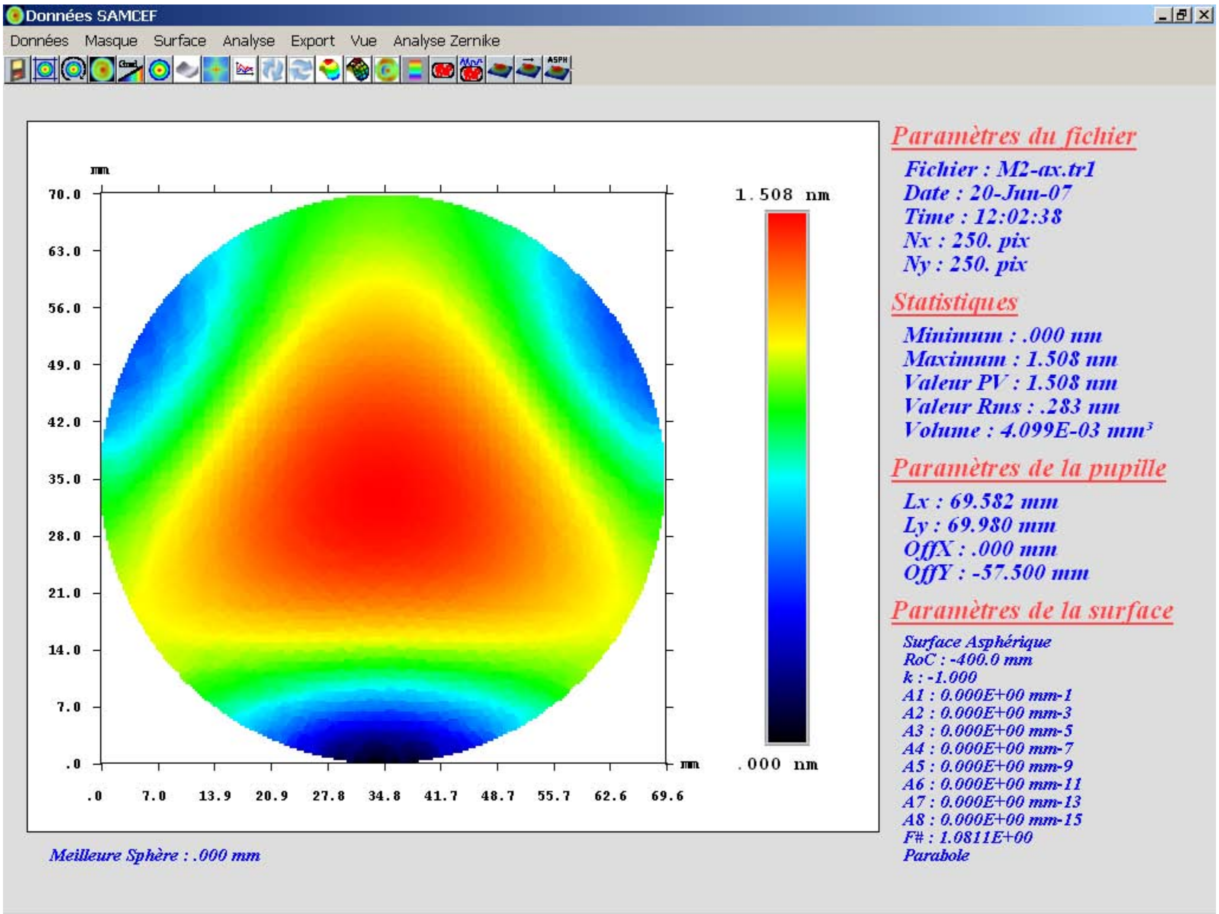

Paramètres du fichier

Fichier : M2-ax.tr1
Date : 20-Jun-07
Time : 12:02:38
Nx : 250. pix
Ny : 250. pix

Statistiques

Minimum : .000 nm
Maximum : 1.508 nm
Valeur PV : 1.508 nm
Valeur Rms : .283 nm
Volume : 4.099E-03 mm³

Paramètres de la pupille

Lx : 69.582 mm
Ly : 69.980 mm
OffX : .000 mm
OffY : -57.500 mm

Paramètres de la surface

Surface Asphérique
RoC : -400.0 mm
k : -1.000
A1 : 0.000E+00 mm-1
A2 : 0.000E+00 mm-3
A3 : 0.000E+00 mm-5
A4 : 0.000E+00 mm-7
A5 : 0.000E+00 mm-9
A6 : 0.000E+00 mm-11
A7 : 0.000E+00 mm-13
A8 : 0.000E+00 mm-15
F# : 1.0811E+00
Parabole

Meilleure Sphère : .000 mm

Axial gravity : 0.3nm RMS SFE

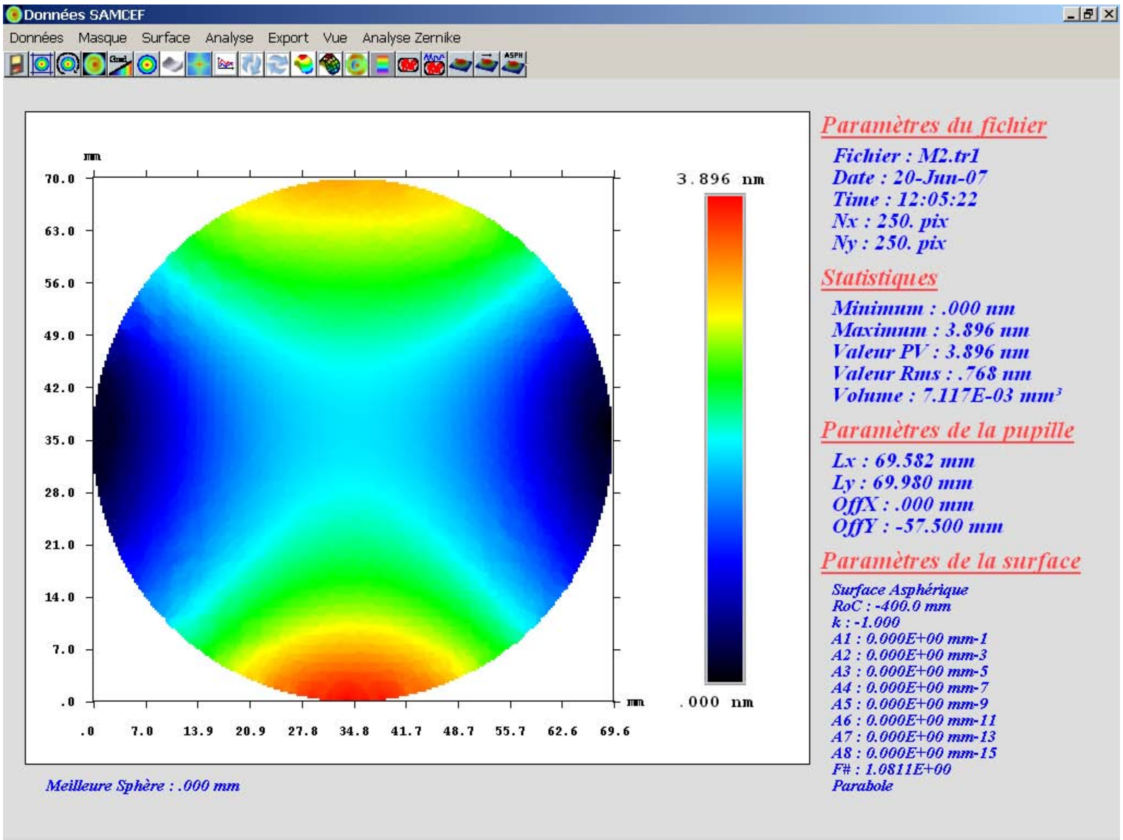

Meilleure Sphère : .000 mm

Paramètres du fichier

Fichier : M2.tr1
Date : 20-Jun-07
Time : 12:05:22
Nx : 250. pix
Ny : 250. pix

Statistiques

Minimum : .000 nm
Maximum : 3.896 nm
Valeur PV : 3.896 nm
Valeur Rms : .768 nm
Volume : 7.117E-03 mm³

Paramètres de la pupille

Lx : 69.582 mm
Ly : 69.980 mm
OffX : .000 mm
OffY : -57.500 mm

Paramètres de la surface

Surface Asphérique
RoC : -400.0 mm
k : -1.000
A1 : 0.000E+00 mm-1
A2 : 0.000E+00 mm-3
A3 : 0.000E+00 mm-5
A4 : 0.000E+00 mm-7
A5 : 0.000E+00 mm-9
A6 : 0.000E+00 mm-11
A7 : 0.000E+00 mm-13
A8 : 0.000E+00 mm-15
F# : 1.0811E+00
Parabole

Lateral gravity : 0.8nm RMS SFE

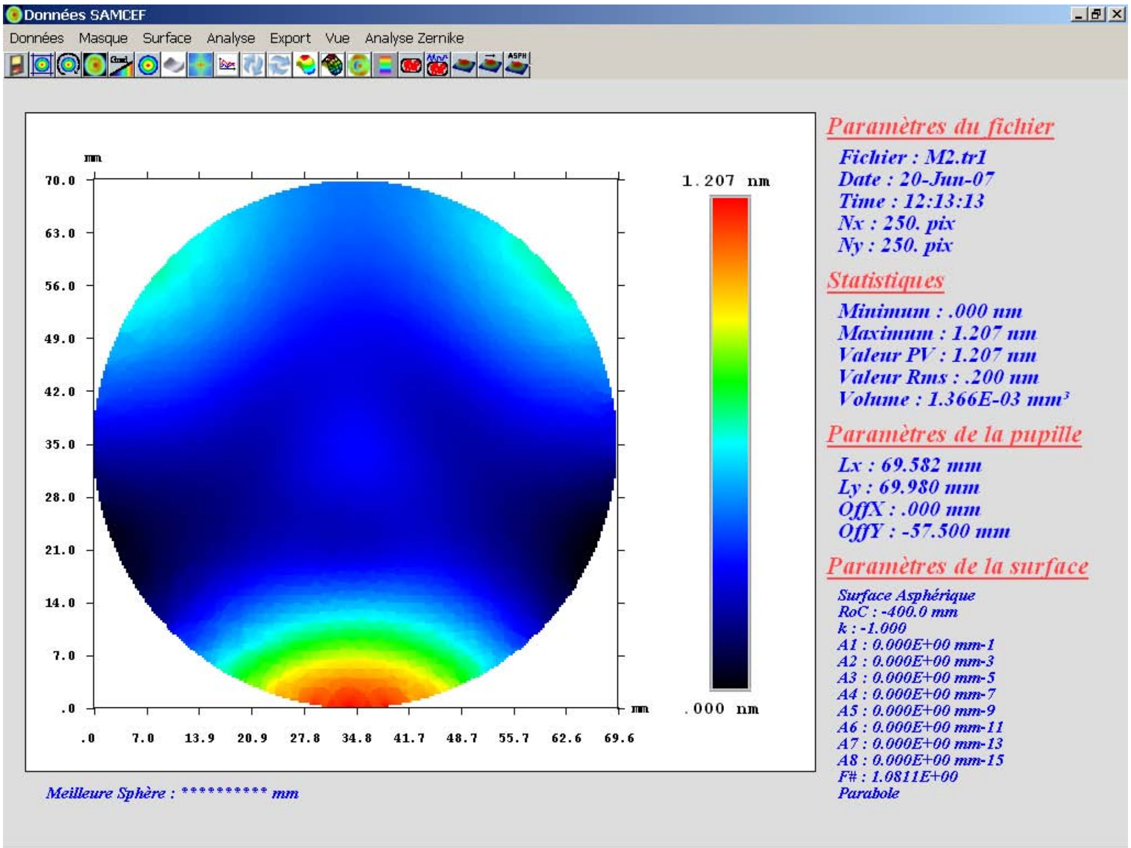

Paramètres du fichier
Fichier : M2.tr1
Date : 20-Jun-07
Time : 12:13:13
Nx : 250. pix
Ny : 250. pix

Statistiques
Minimum : .000 nm
Maximum : 1.207 nm
Valeur PV : 1.207 nm
Valeur Rms : .200 nm
Volume : 1.366E-03 mm³

Paramètres de la pupille
Lx : 69.582 mm
Ly : 69.980 mm
OffX : .000 mm
OffY : -57.500 mm

Paramètres de la surface
Surface Asphérique
RoC : -400.0 mm
k : -1.000
A1 : 0.000E+00 mm-1
A2 : 0.000E+00 mm-3
A3 : 0.000E+00 mm-5
A4 : 0.000E+00 mm-7
A5 : 0.000E+00 mm-9
A6 : 0.000E+00 mm-11
A7 : 0.000E+00 mm-13
A8 : 0.000E+00 mm-15
F# : 1.0811E+00
Parabole

Meilleure Sphère : ********** mm

Thermal load +50°C : 0.2nm RMS SFE

4. M3

The M3 mirror is made of silicon carbide.
The mirror surface is elliptical (mechanical 130x100mm)
It features the same thermal regulation plate as the M2 mirror.

Btw, it is foreseen to implement identical thermal regulation plates on all SiC mirrors (i.e. M2, M3, M4 and M5)

The optical surface presents a constant thickness of 25 mm

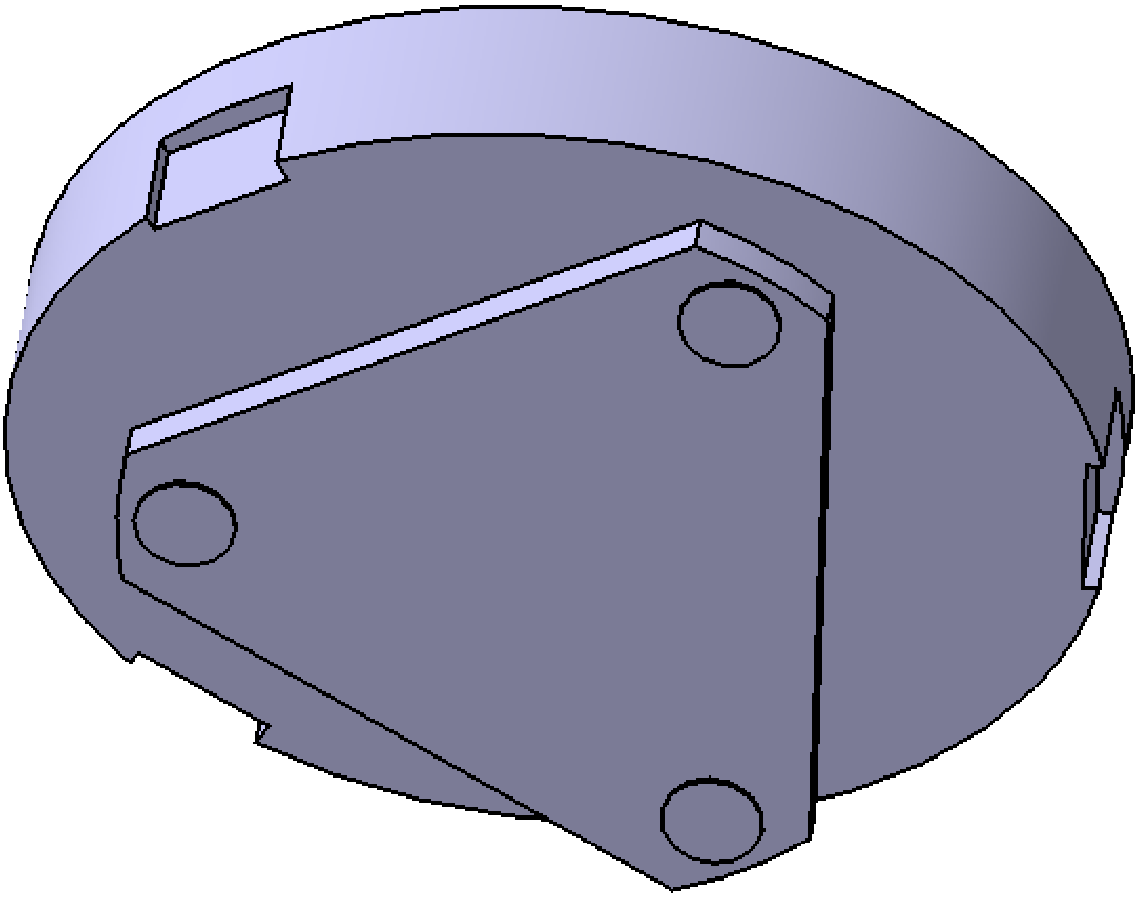

The FE model is made of volumic elements.
The flexures (40x15x0.4mm) are modeled by means of equivalent beam elements
The thermal effect of the copper strap is taken into account
The cell is modeled by means of 3 rigid beams in order to take into account its thermal expansion effect only.
In this peculiar model, the glue between mirror and flexures has been modeled by one layer of volumic elements :

C2216 glue

Young's modulus	2.00E+09 N/m^2
Poisson ratio	0.30
Thermal expansion ratio	1.2E-04 K^{-1}

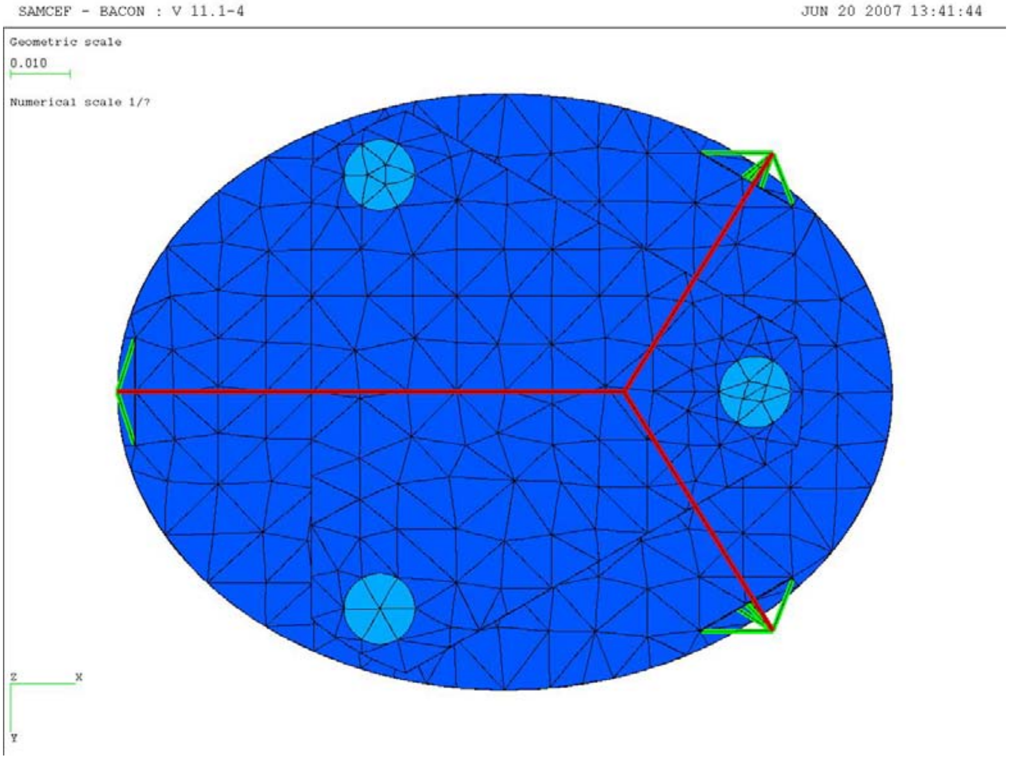

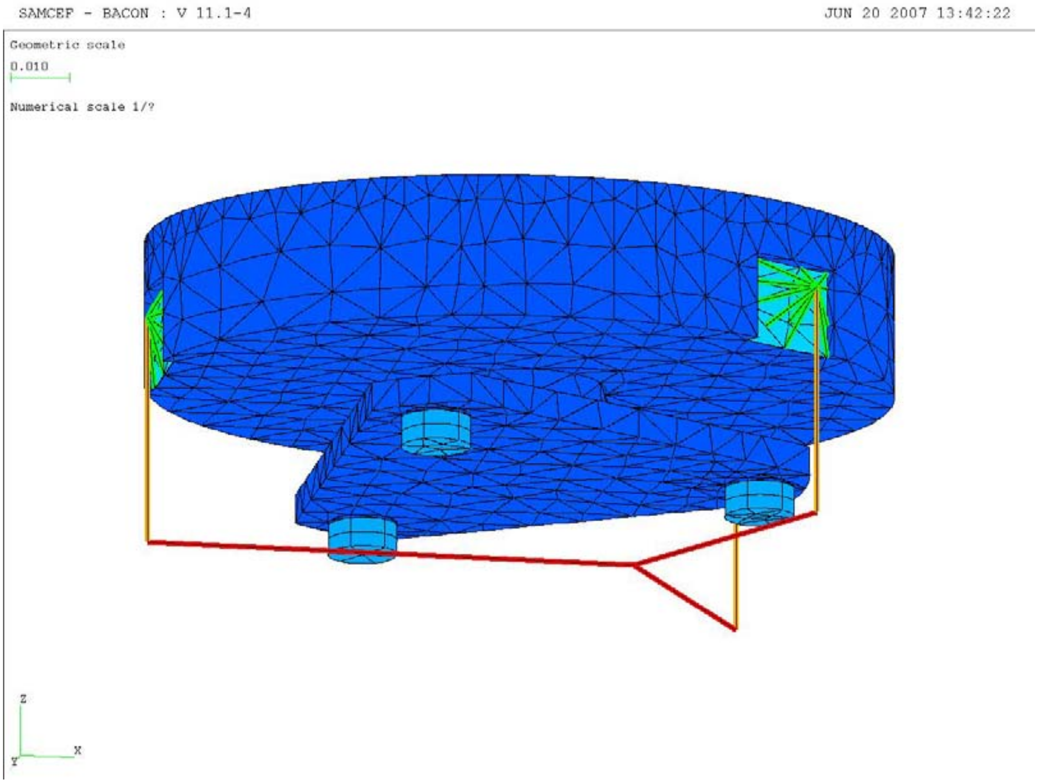
SAMCEF - BACON : V 11.1-4
JUN 20 2007 13:42:22
Geometric scale
0.010
Numerical scale 1/?
Z
X
Y

Analyses results

Internal budget for support and integration is 5 nm RMS WFE, i.e. **2.5nm RMS SFE**
This budget does not include piston and tilts.

The M5 PDR baseline gives the following opto-mechanical results :

Axial gravity	**= 1.1 nm RMS SFE**
Lateral gravity 1	**= 1.1 nm RMS SFE**
Lateral gravity 2	**= 1.3 nm RMS SFE**
Thermal load +50°C	**= 1.0 nm RMS SFE**

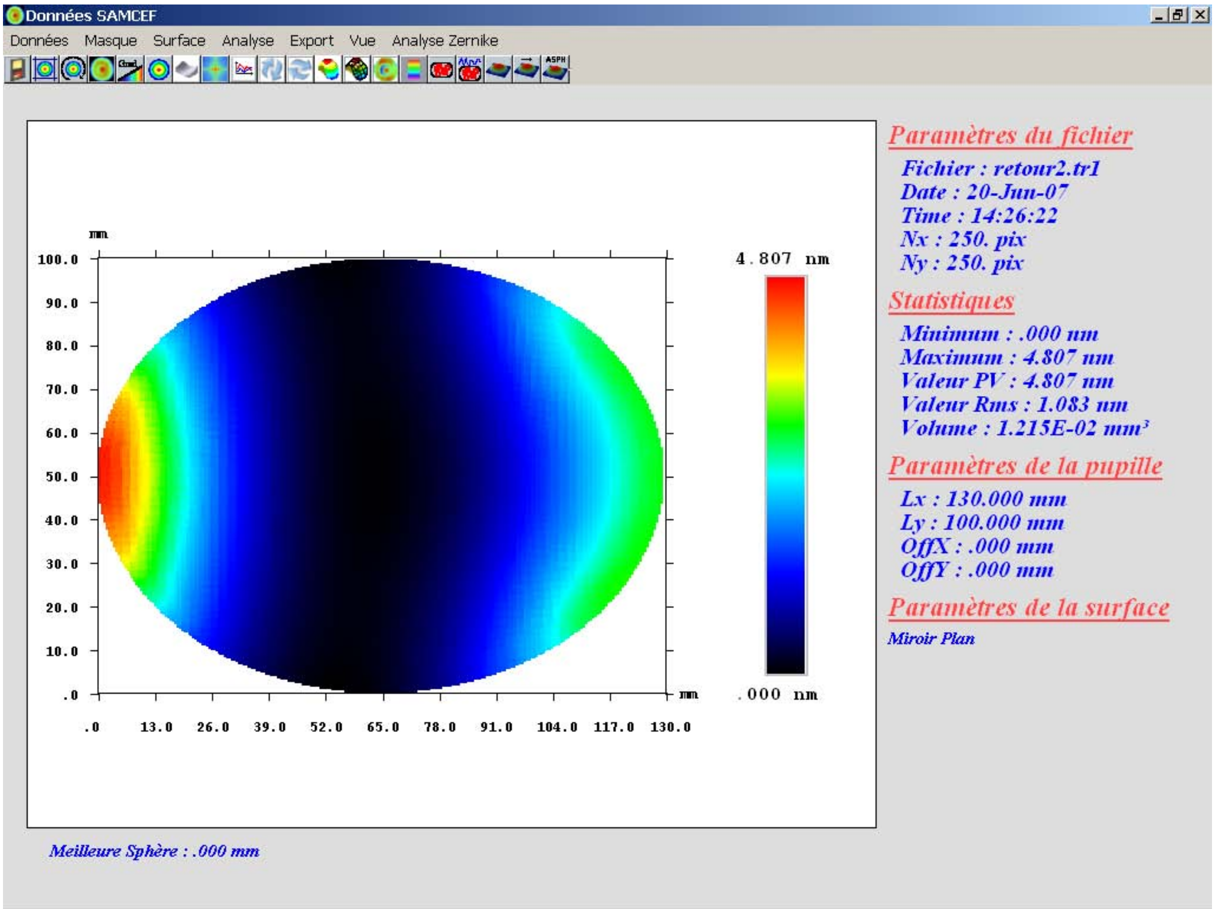

Paramètres du fichier
Fichier : retour2.tr1
Date : 20-Jun-07
Time : 14:26:22
Nx : 250. pix
Ny : 250. pix

Statistiques
Minimum : .000 nm
Maximum : 4.807 nm
Valeur PV : 4.807 nm
Valeur Rms : 1.083 nm
Volume : 1.215E-02 mm³

Paramètres de la pupille
Lx : 130.000 mm
Ly : 100.000 mm
OffX : .000 mm
OffY : .000 mm

Paramètres de la surface
Miroir Plan

Meilleure Sphère : .000 mm

Axial gravity : 1.1nm RMS SFE

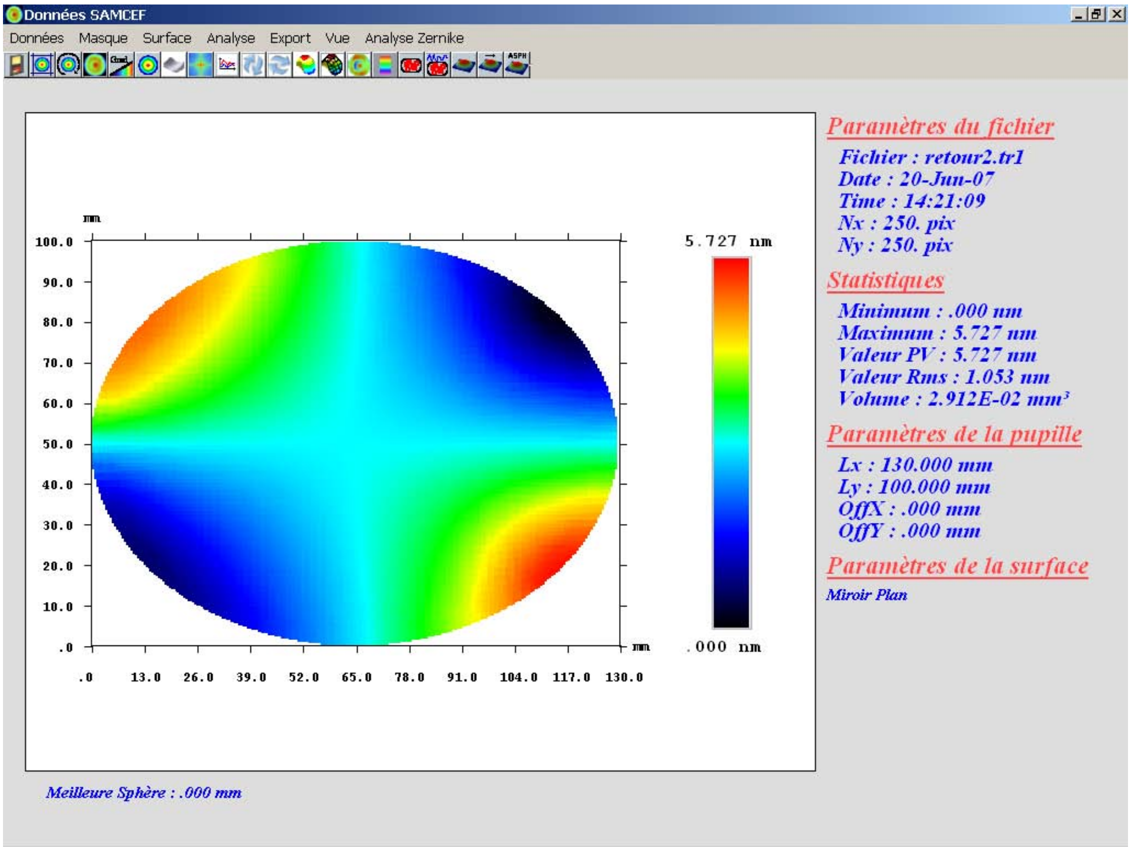

Paramètres du fichier

Fichier : retour2.tr1
Date : 20-Jun-07
Time : 14:21:09
Nx : 250. pix
Ny : 250. pix

Statistiques

Minimum : .000 nm
Maximum : 5.727 nm
Valeur PV : 5.727 nm
Valeur Rms : 1.053 nm
Volume : 2.912E-02 mm³

Paramètres de la pupille

Lx : 130.000 mm
Ly : 100.000 mm
OffX : .000 mm
OffY : .000 mm

Paramètres de la surface

Miroir Plan

Meilleure Sphère : .000 mm

Lateral gravity along OY : 1.1nm RMS

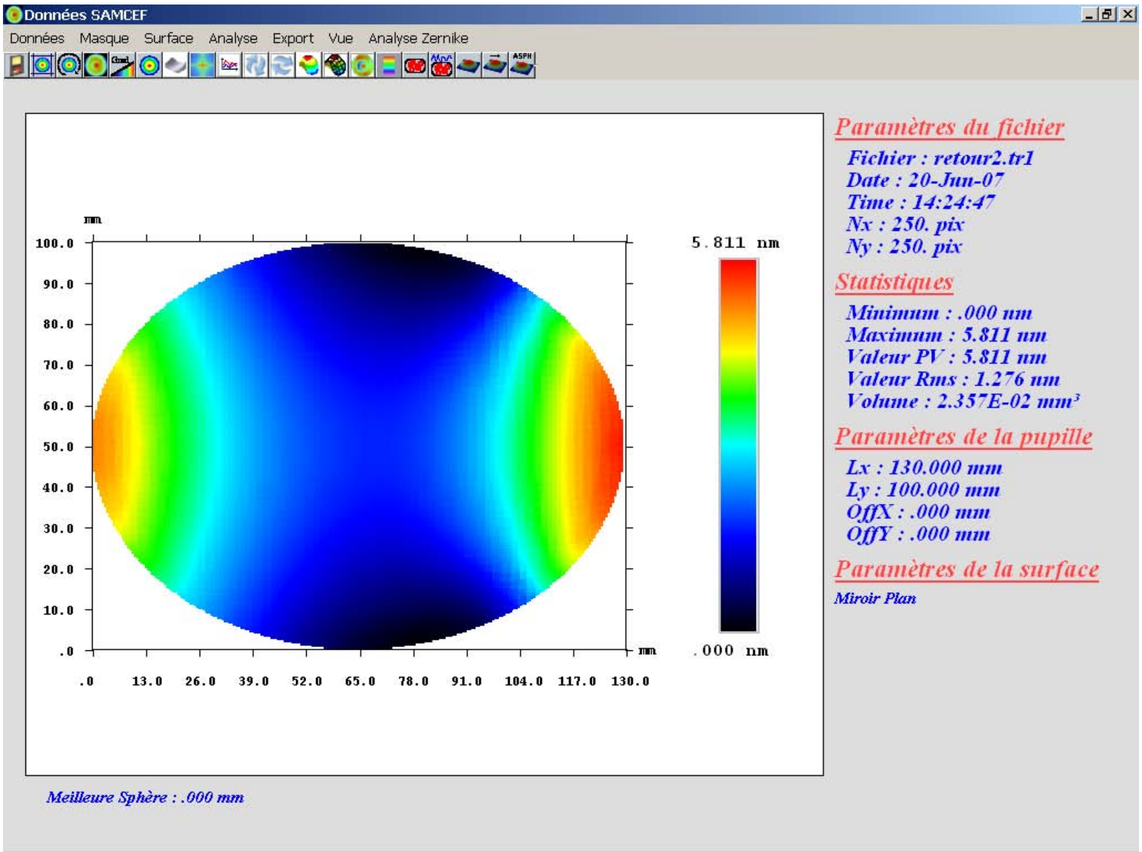

Paramètres du fichier

Fichier : retour2.tr1
Date : 20-Jun-07
Time : 14:24:47
Nx : 250. pix
Ny : 250. pix

Statistiques

Minimum : .000 nm
Maximum : 5.811 nm
Valeur PV : 5.811 nm
Valeur Rms : 1.276 nm
Volume : 2.357E-02 mm³

Paramètres de la pupille

Lx : 130.000 mm
Ly : 100.000 mm
OffX : .000 mm
OffY : .000 mm

Paramètres de la surface

Miroir Plan

Meilleure Sphère : .000 mm

Lateral gravity along OX : 1.3nm RMS SFE

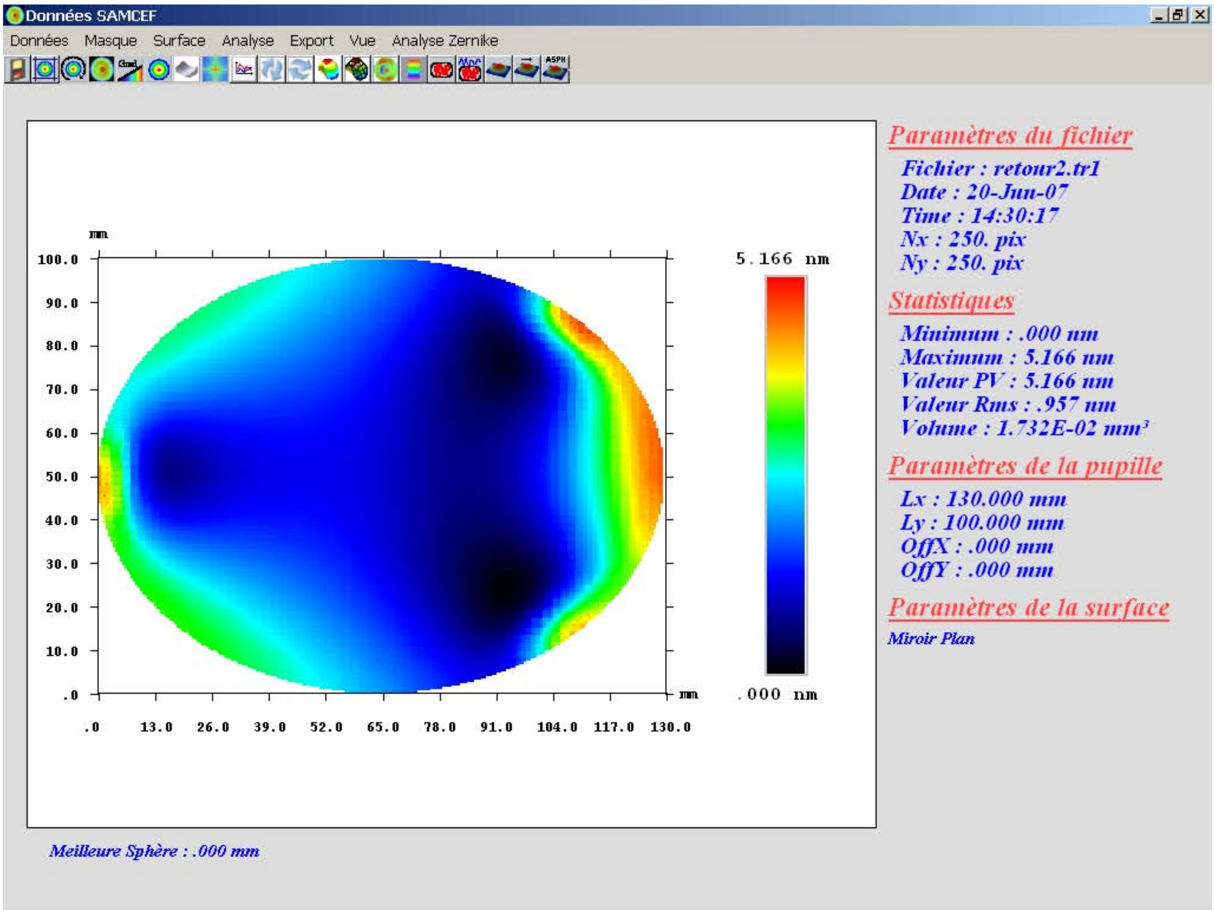

Paramètres du fichier

Fichier : retour2.tr1
Date : 20-Jun-07
Time : 14:30:17
Nx : 250. pix
Ny : 250. pix

Statistiques

Minimum : .000 nm
Maximum : 5.166 nm
Valeur PV : 5.166 nm
Valeur Rms : .957 nm
Volume : 1.732E-02 mm³

Paramètres de la pupille

Lx : 130.000 mm
Ly : 100.000 mm
OffX : .000 mm
OffY : .000 mm

Paramètres de la surface

Miroir Plan

Meilleure Sphère : .000 mm

Thermal load + 50°C : 1.0nm RMS SFE

5. M5

The M5 mirror is made of silicon carbide.
The mirror surface is elliptical (mechanical 215x110mm)
It features the same thermal regulation plate as the M2 mirror.

Btw, it is foreseen to implement identical thermal regulation plates on all SiC mirrors (i.e. M2, M3, M4 and M5)

The optical surface presents a constant thickness of 30 mm

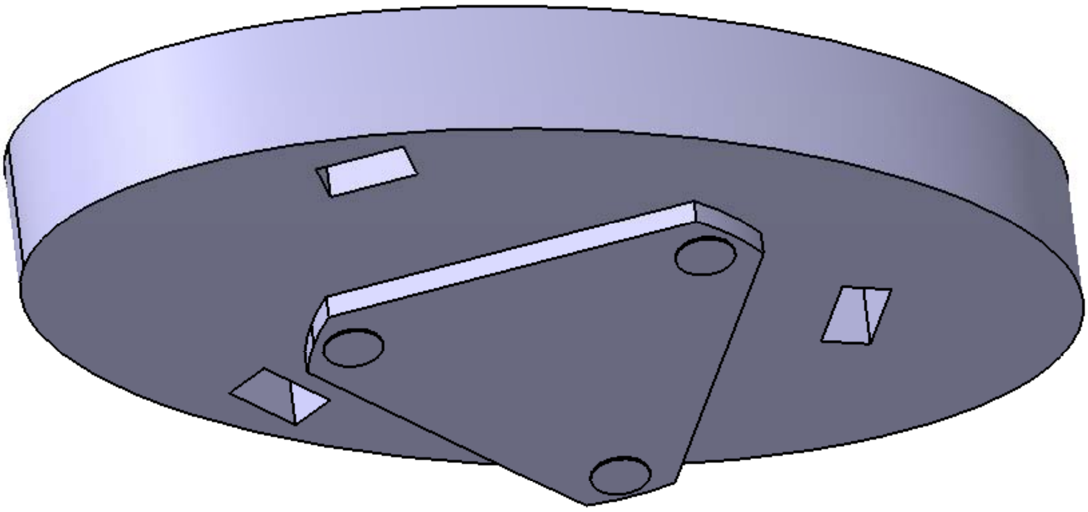

The FE model is made of volumic elements.
The flexures (40x15x0.4mm) are modeled by means of equivalent beam elements
The thermal effect of the copper strap is taken into account
The cell is modeled by means of 3 rigid beams in order to take into account its thermal expansion effect only.

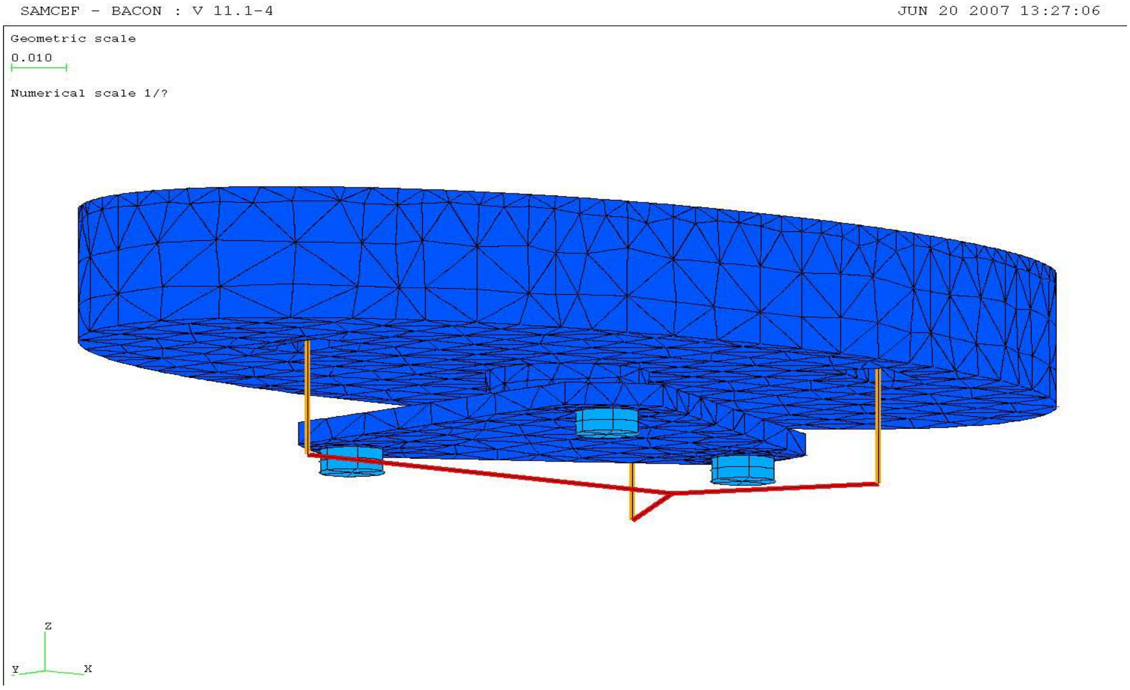
SAMCEF - BACON : V 11.1-4
JUN 20 2007 13:27:06
Geometric scale
0.010
Numerical scale 1/?
Z
Y
X

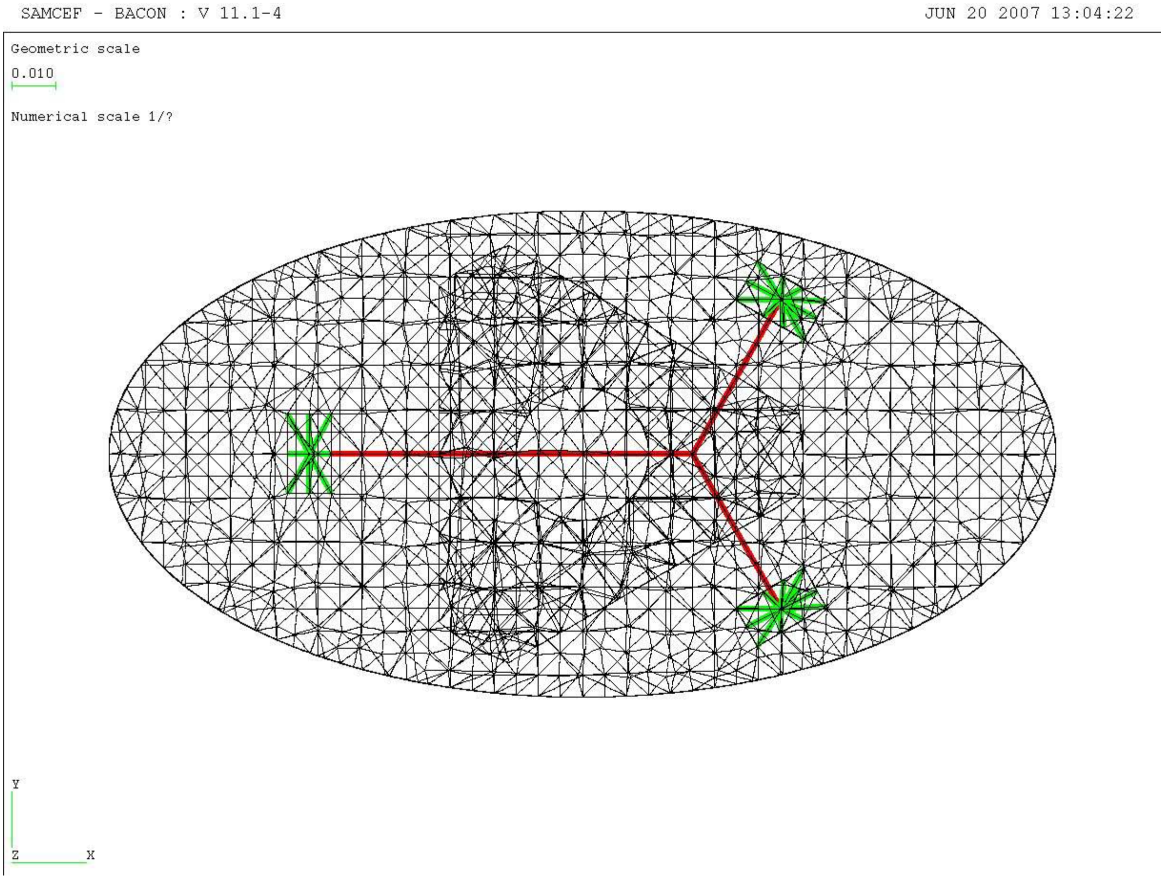

Analyses results

Internal budget for support and integration is 5 nm RMS WFE, i.e. **2.5nm RMS SFE**
This budget does not include piston and tilts.

The M5 PDR baseline gives the following opto-mechanical results :
Axial gravity = 0.5 nm RMS SFE
Lateral gravity 1 = 1.4 nm RMS SFE
Lateral gravity 2 = 1.7 nm RMS SFE
Thermal load +50°C = 0.7 nm RMS SFE

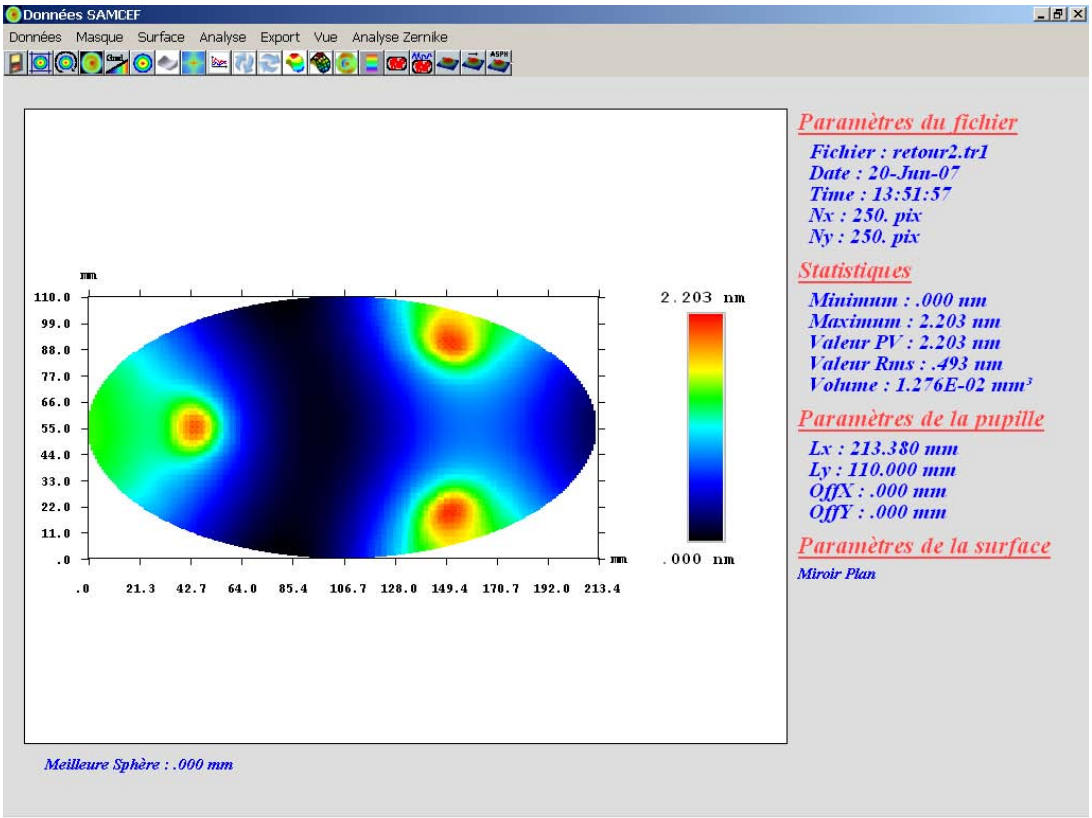

Paramètres du fichier

Fichier : retour2.tr1
Date : 20-Jun-07
Time : 13:51:57
Nx : 250. pix
Ny : 250. pix

Statistiques

Minimum : .000 nm
Maximum : 2.203 nm
Valeur PV : 2.203 nm
Valeur Rms : .493 nm
Volume : 1.276E-02 mm³

Paramètres de la pupille

Lx : 213.380 mm
Ly : 110.000 mm
OffX : .000 mm
OffY : .000 mm

Paramètres de la surface

Miroir Plan

Meilleure Sphère : .000 mm

Axial gravity : 0.5nm RMS SFE

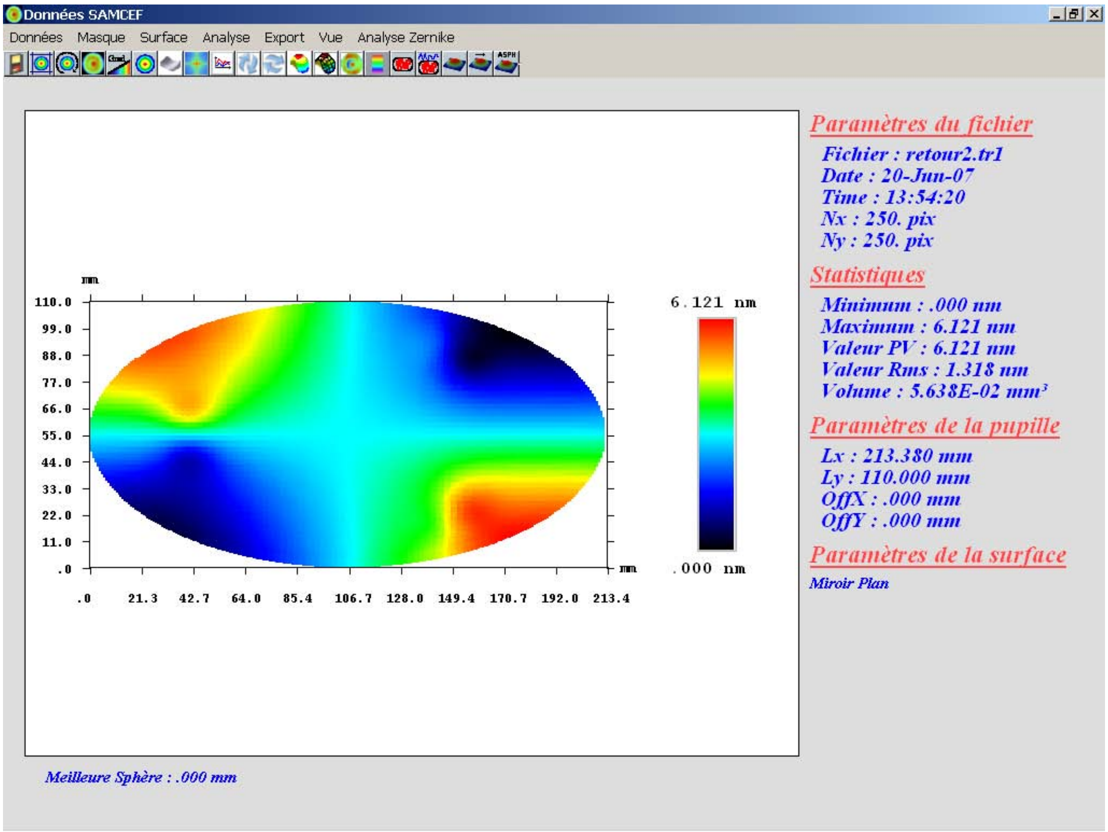

Paramètres du fichier

Fichier : retour2.tr1
Date : 20-Jun-07
Time : 13:54:20
Nx : 250. pix
Ny : 250. pix

Statistiques

Minimum : .000 nm
Maximum : 6.121 nm
Valeur PV : 6.121 nm
Valeur Rms : 1.318 nm
Volume : 5.638E-02 mm³

Paramètres de la pupille

Lx : 213.380 mm
Ly : 110.000 mm
OffX : .000 mm
OffY : .000 mm

Paramètres de la surface

Miroir Plan

Meilleure Sphère : .000 mm

Lateral gravity along OY : 1.4nm RMS

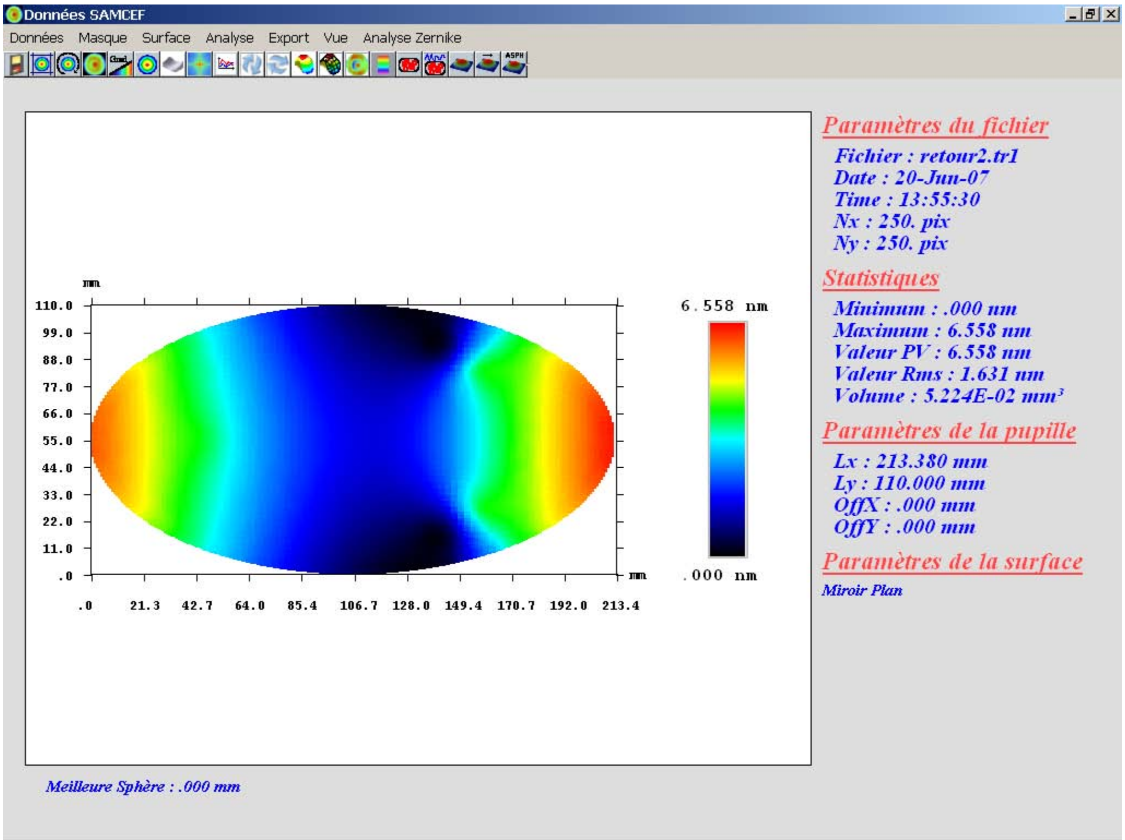

Paramètres du fichier

Fichier : retour2.tr1
Date : 20-Jun-07
Time : 13:55:30
Nx : 250. pix
Ny : 250. pix

Statistiques

Minimum : .000 nm
Maximum : 6.558 nm
Valeur PV : 6.558 nm
Valeur Rms : 1.631 nm
Volume : 5.224E-02 mm^3

Paramètres de la pupille

Lx : 213.380 mm
Ly : 110.000 mm
OffX : .000 mm
OffY : .000 mm

Paramètres de la surface

Miroir Plan

Meilleure Sphère : .000 mm

Lateral gravity along OX : 1.7nm RMS SFE

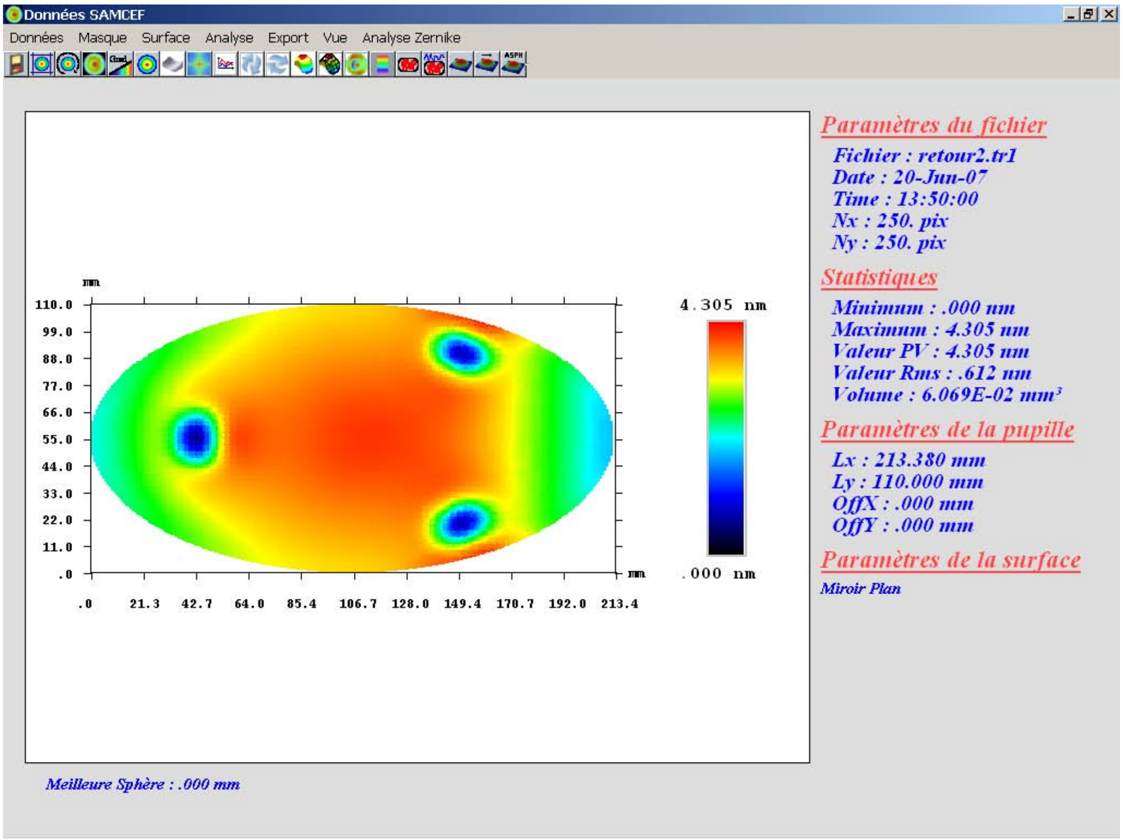

Paramètres du fichier

Fichier : retour2.tr1
Date : 20-Jun-07
Time : 13:50:00
Nx : 250. pix
Ny : 250. pix

Statistiques

Minimum : .000 nm
Maximum : 4.305 nm
Valeur PV : 4.305 nm
Valeur Rms : .612 nm
Volume : 6.069E-02 mm³

Paramètres de la pupille

Lx : 213.380 mm
Ly : 110.000 mm
OffX : .000 mm
OffY : .000 mm

Paramètres de la surface

Miroir Plan

Meilleure Sphère : .000 mm

Thermal load + 50°C : 0.7nm RMS SFE

Multi Application Solar Telescope

AMOS / 1967 / 01-12 : Cal

Upper Sun Shield Motorisation calculation note

SCOPE

The aim of this document is to provide calculations made to determine upper sun shield motorisation.

Issue	Date	Modifications
1.A	10/07/2007	First issue

COMMENTS

In this issue, we consider a 20 mm/revolution actuator screw pitch.
We consider the possibility to change it to 5 mm in order to have a better adequacy between the motor and the application, mainly concerning the motor speed.

		Date	Signature
Prepared by	Eric GABRIEL		
Checked by	Christophe DELREZ		
Released by	Stéfan DENIS		

AMOS S.A.

Calculation Note

Projet: C 1967
AO #: 01/12
Issue: 1.A

UNITS

$rev := 2 \cdot \pi$ $\quad rpm := \frac{rev}{min}$ $\quad t := 1000 \cdot kg$ $\quad dm := \frac{m}{10}$ $\quad lit := dm^3$ $\quad bar := 10^5 \cdot Pa$

CLIENT SPECIFICATIONS

Max slewing speed (§12.4) $\quad N\_max := 2 \cdot \frac{deg}{s}$

AMOS INTERNAL DATA

See also the drawing on the last page

Radius on which the actuator is fixed $\quad R := 472.69 \cdot mm$

Vertical distance between the center of rotation and the actuator foot $\quad H := 1401.63 \cdot mm$

Horizontal distance between the center of rotation and the actuator foot $\quad L := 177.59 \cdot mm$

Actuator initial angle $\quad \alpha_0 := (48.13 - 90) \cdot deg \quad \alpha_0 = -41.87\,deg$ (Panel is vertical)

Force actuateur $\quad F\_act := 13000 \cdot N$

Panel mass $\quad m\_pan := 250 \cdot kg$

Structure CoG $\quad cog\_str := 2000 \cdot mm$

Panel surface $\quad S\_pan := 2 \cdot m \cdot 2 \cdot m \quad S\_pan = 4\,m^2$

Panel radius $\quad R\_pan := 2200 \cdot mm$

Wind pressure $\quad P\_wind := 113 \cdot Pa$

Bearing friction torque estimated $\quad T\_bea := (10 \cdot 2) \cdot N \cdot m$

Max acceleration: $\quad a\_max := 2 \cdot \frac{deg}{s^2}$

THOMSON DATA

Actuator T09-B-3220-M-R-93

Rod Idle torque $\quad T\_rod := 3 \cdot N \cdot m$

Screw pitch $\quad Screw\_pitch := 20 \cdot \frac{mm}{rev}$

Max Dynamic load $\quad F\_dyn_{max} := 20000 \cdot N$

Max drive shaft torque $\quad T\_shaft_{max} := 93 \cdot N \cdot m$

Screw efficiency	$\eta\_screw := 0.85$	CONSERVATIVE
Belt gear ratio	$i\_belt := 3$	
Belt gear efficiency	$\eta\_belt := 0.85 \cdot 0.9$	0.9 : AMOS safety factor
Max belt input speed	$n\_in\_belt_{max} := 4000 \cdot rpm$	
Max belt input torque	$T\_in\_belt_{max} := 9.7 \cdot N \cdot m$	

DANAHER DATA

MOTOR AKM 54G

Standstill Torque	$T_{ss} := 14.3 \cdot N \cdot m$
Continuous (Rated) Torque	$T_c := 12.9 \cdot N \cdot m$
Back EMF	$Ku := 185 \cdot \frac{mV}{rpm}$
Torque constant	$Kt := 2.88 \cdot N \cdot \frac{m}{A}$
Electrical resistance (between terminals)	$R_{25} := 4.08 \cdot \Omega$
Electrical inductance (between terminals)	$L_1 := 22.9 \cdot mH$
Continuous power dissipation	$P_c := 2950 \cdot W$
Number of pair poles	$p_{mot} := 5$
Drive dissipation (AMOS estimation)	$P_{drive\_diss} := 50 \cdot W$
Drive voltage drop	$V_{drop\_drive} := 1.5 \cdot V$

CALCULATIONS

ACTUATOR NEEDS

Stroke

Distance between center of rotation and actuator foot $A := \sqrt{L^2 + H^2}$ $A = 1.413 \times 10^3 \, mm$

Angle between the line joining the center of rotation and the actuator foot with horizontal $\alpha_1 := atan\left(\frac{H}{L}\right)$ $\alpha_1 = 82.779 \, deg$

$a := -50, -49.5 .. 50$ $\alpha(a) := a \cdot deg$

Actuator length $b(a) := \sqrt{R^2 + A^2 - 2 \cdot A \cdot R \cdot \cos\left(\alpha(a) + \alpha_1\right)}$

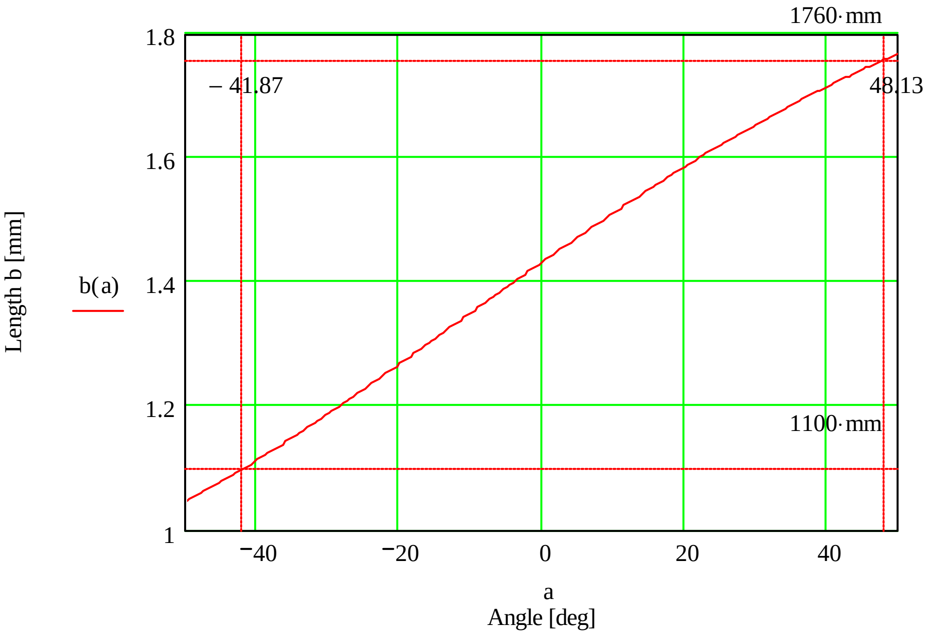

Actuator stroke $Stroke := b\left(90 + \frac{\alpha_0}{deg}\right) - b\left(\frac{\alpha_0}{deg}\right)$ $Stroke = 658.988 \, mm$

Speed

Actuator stroke variation with angle $c(a) := A\cdot R\cdot\left(R^2 + A^2 - 2\cdot A\cdot R\cdot\cos\left(\alpha(a) + \alpha_1\right)\right)^{-0.5}\cdot\sin\left(\alpha(a) + \alpha_1\right)$

Actuator speed $sp(a) := c(a)\cdot N\_max\,1.5$ $sp\left(\frac{\alpha_0}{deg}\right) = 20.816\,\frac{mm}{s}$ $sp\left(90 + \frac{\alpha_0}{deg}\right) = 15.023\,\frac{mm}{s}$

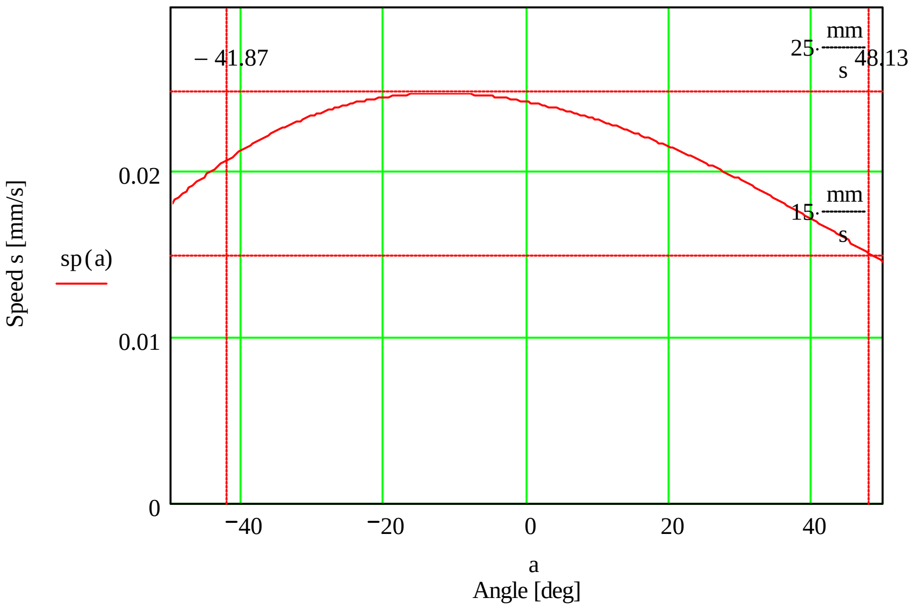

Lever arm

Lever arm $d(a) := \frac{(A\cdot R)}{b(a)}\cdot\sin\left(\alpha(a) + \alpha_1\right)$

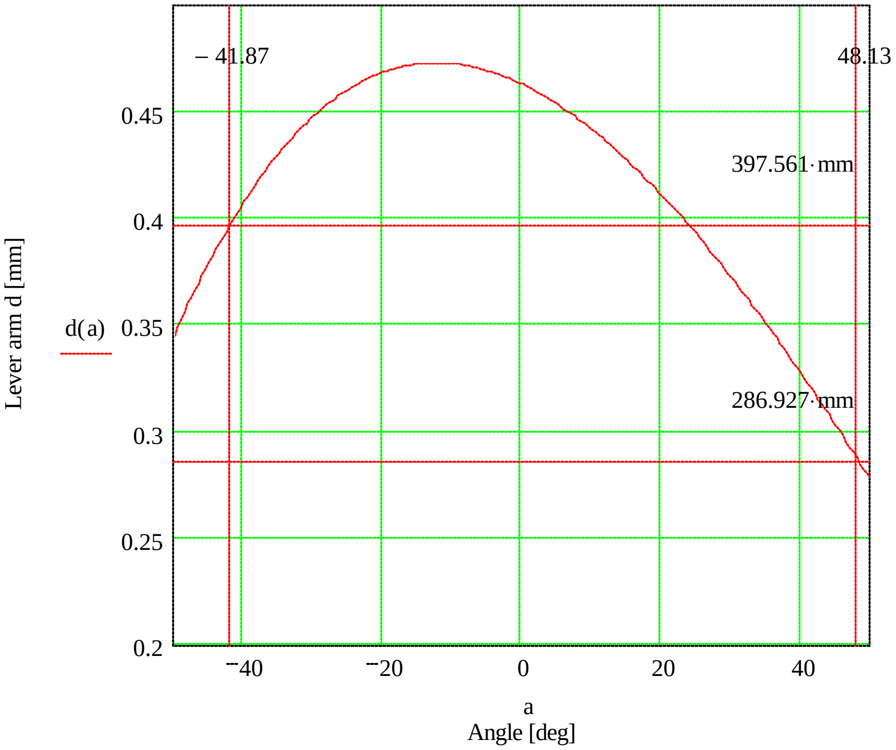

Torques

Actuator torque $T\_act(a) := F\_act \cdot d(a)$

Panel torque (due to weight) $T\_pan(a) := m\_pan \cdot g \cdot cog\_str \cdot \cos\left(\alpha(a) - \alpha_0\right)$

HYP : We consider an horizontal wind

Panel surface seen $S\_pan\_seen(a) := S\_pan \cdot \left|\sin\left(\alpha(a) - \alpha_0\right)\right|$

Wind torque $T\_wind(a) := P\_wind \cdot S\_pan\_seen(a) \cdot R\_pan \cdot \cos\left(\alpha(a) - \alpha_0\right)$

Net torque $T\_net(a) := T\_act(a) - T\_pan(a) - T\_wind(a) - T\_bea$

Inertia $I := m\_pan \cdot R\_pan^2$ $I = 1.21 \times 10^3 \, kg \, m^2$

Minimum net torque $T\_acc := I \cdot a\_max$ $T\_acc = 42.237 \, J$

Torque margin $T\_mar(a) := T\_net(a) - T\_acc$

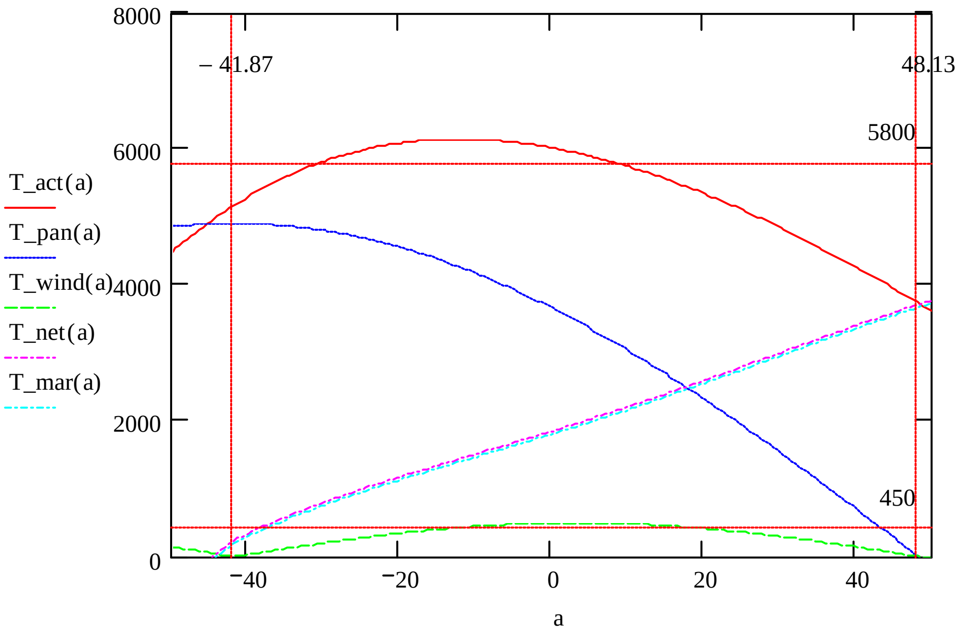

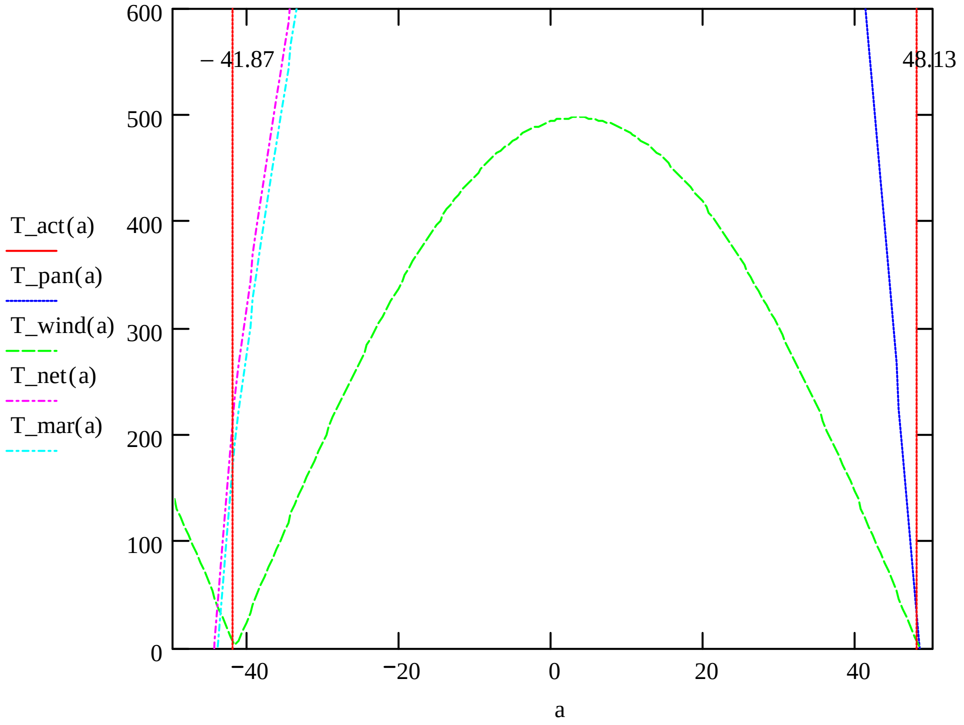

$$\mathrm{T\_mar}\left(\frac{\alpha_0}{\mathrm{deg}}\right) = 202.729\,\mathrm{J}$$

This note shows that providing we have a 14 000 N actuator, we have enough torque to move the upper sun shield in every position.

ACTUATOR DESIGN

We have placed two actuators. So, the total actuator force is divided by 2

Actuator force $\mathrm{F\_actu} := \frac{\mathrm{F\_act}}{2}$ $\mathrm{F\_actu} = 6.5 \times 10^3\,\mathrm{N}$

Drive shaft torque $\mathrm{T\_shaft} := \mathrm{F\_actu} \cdot \frac{\mathrm{Screw\_pitch}}{\eta\mathrm{\_screw}}$ $\mathrm{T\_shaft} = 24.341\,\mathrm{N \cdot m}$

Drive shaft speed (see graph above) $\mathrm{N\_shaft} := 25 \cdot \frac{\mathrm{mm}}{\mathrm{s}}$

Screw speed $\mathrm{N\_screw} := \frac{\mathrm{N\_shaft}}{\mathrm{Screw\_pitch}}$ $\mathrm{N\_screw} = 75\,\mathrm{rpm}$

Motor speed $\mathrm{N\_motor} := \mathrm{N\_screw} \cdot \mathrm{i\_belt}$ $\mathrm{N\_motor} = 225\,\mathrm{rpm}$

Motor torque $\mathrm{T\_motor} := \frac{(\mathrm{T\_shaft} + \mathrm{T\_rod})}{\mathrm{i\_belt} \cdot \eta\mathrm{\_belt}}$ $\mathrm{T\_motor} = 11.913\,\mathrm{N \cdot m}$

$i\_belt \cdot \eta\_belt$

Motor torque Safety factor (rated torque) $SF\_Tc := \frac{T_c}{T\_motor}$ $SF\_Tc = 1.083$

Motor torque Safety factor (standstill torque) $SF\_Tss := \frac{T_{ss}}{T\_motor}$ $SF\_Tss = 1.2$

Motor current $I\_mot := \frac{T\_motor}{Kt}$ $I\_mot = 4.137\,A$

MOTOR THERMAL DISSIPATION

Simplified Motor Dissipated power $P\_mot\_diss := \frac{3}{2} R_{25} \cdot I\_mot^2$ $P\_mot\_diss = 104.723\,W$

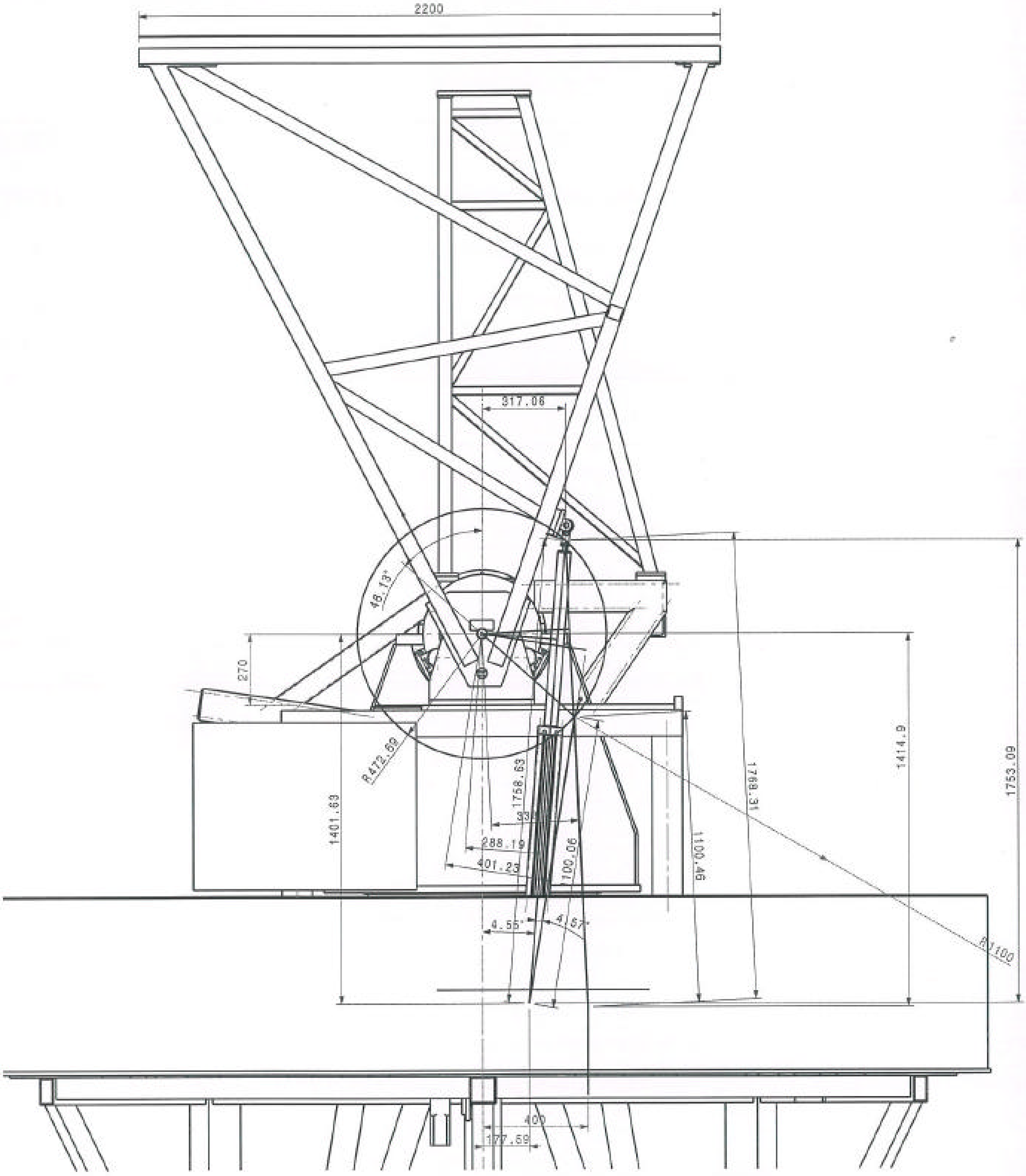
2200
317.08
48.13°
270
R472.69
1401.63
1758.63
33
288.19
401.23
100.06
1100.46
1769.31
1414.9
1753.09
R1100
4.55°
4.57°
400
177.59

AMOS S.A.
ADVANCED MECHANICAL AND OPTICAL SYSTEMS

C 1967

PRL

Multi Application Solar Telescope

AMOS / 1967 / 29-01 : Block

Control System Block Diagram

SCOPE

The aim of this document is to present the project globally.
Components are represented by blocks and cables by lines.

Issue	*Date*	*Modifications*
1.A	*9/07/2007*	First issue

COMMENTS

Color code is the following:
Green frame: Provided by PRL
Red frame: inside Main Cabinet (inside the Control Room)
Blue frame: inside Fork Cabinet #1 or #2
Yellow frame: inside the Control Room (but outside of the Main Cabinet)

		Date	*Signature*
Prepared by	Jean-Marc TORTOLANI		
Checked by	Eric GABRIEL		
Released by	Stéfan DENIS		

Multi Application Solar Telescope

AMOS / 1967 / 29-01 : Block

Issue : 1.A
Date : 9/07/2007

Location names

Mnémonic	*Name*
Az CWP	Azimuth Cable Wrap
Fork	Fork
Fork Cabinet	Fork Cabinet
G.I.S.	Ground Interface Structure
Main Cabinet	Main Cabinet
N.A.	Not Applicable
TBD	To Be Defined
Tube	Tube
Up Sun Sh	Upper Sun Shield

Multi Application Solar Telescope

AMOS / 1967 / 29-01 : Block

*Issue :*1.A
*Date :*9/07/2007

Loop names

Number	*Name*	*Mechanical reference*
000	**General**	
010	High voltage power supply and distribution	
020	Low voltage power supply and distribution	
070	TELESCOPE CONTROL SYSTEM	
071	GUI module	
072	Real time module	
073	Data logging module	
074	GPS receiver	
080	Safety loop	
090	MECHANISM CONTROL SYSTEM	
091	Main servo-controller	
092	Master PLC	
100	**ELEVATION MECHANISM**	
110	Elevation motorisation	1967-21-00-00
130	Upper Sun Shield motorisation	
200	**M2 UNIT**	
210	Hexapod motorisation	
220	Wave Front Sensor	
300	**M1 UNIT**	
310	M1 cover	
400	**AZIMUTH MECHANISM**	
410	Azimuth motorisation	1967-31-00-00
430	Azimuth cable wrap	
500	**DEROTATOR MECHANISM**	
510	Derotation motorisation	
600	**AUTO GUIDING UNIT**	
610	AGU CCD	
700	**PRL SUPPLY**	
710	Polarimeter	

Multi Application Solar Telescope

AMOS / 1967 / 29-01 : Block

Issue :1.A
Date :9/07/2007

Loop names

Number	Name	Mechanical reference
720	Weather Station	
800	**THERMAL CONTROL**	
810	M1 thermal control	
811	M1 Fans	
812	M1 liquid cooling	
820	M2 thermal control	
830	M3 thermal control	
890	Heat stop thermal control	
900	**AUXILIARY MODULES**	
910	Liquid cooling module	
911	Chiller	
912	Primary circuit	
920	Pneumatic group (PRL supply?)	
930	Ventilation system	

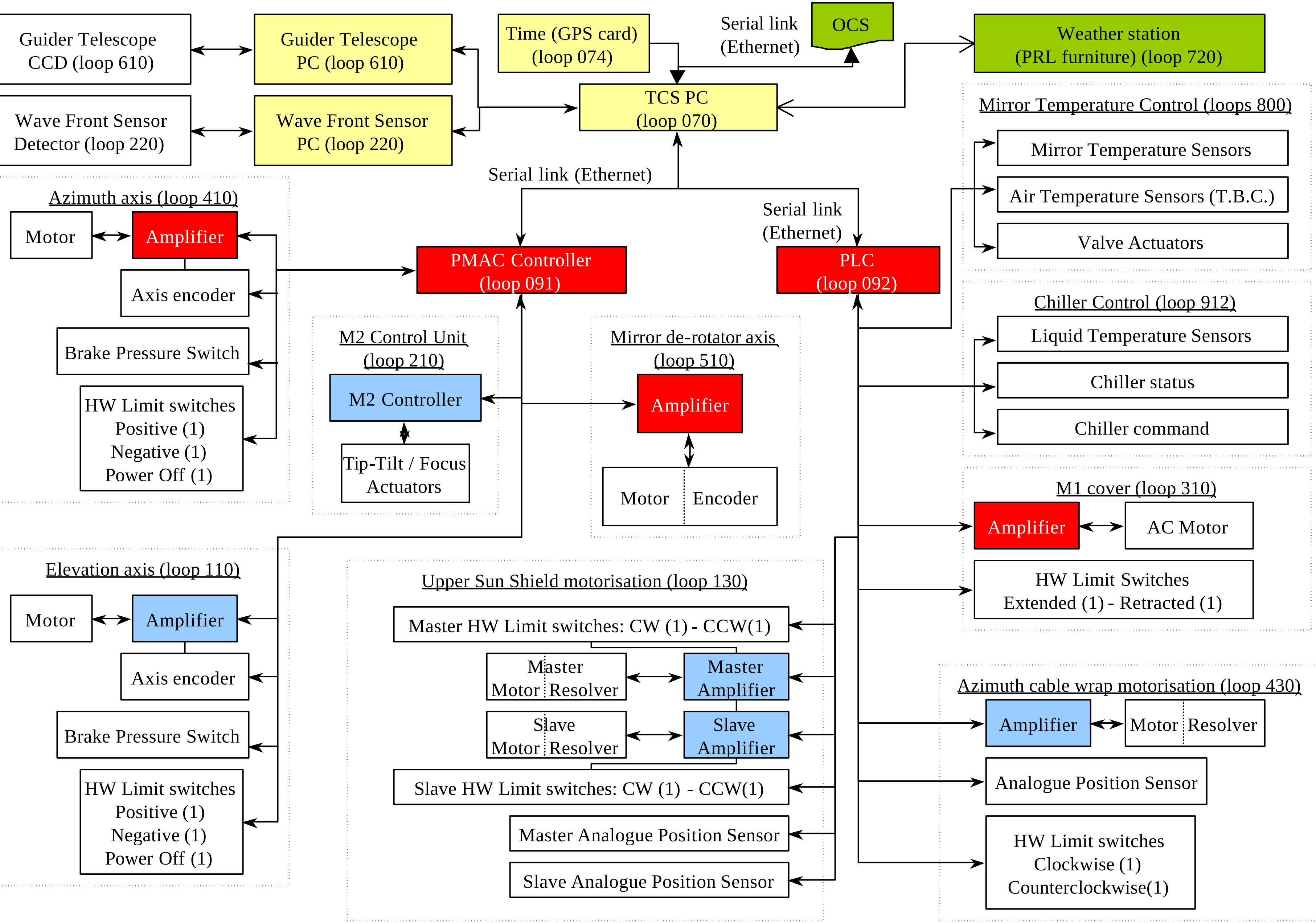

1967_2901_1A_Bloc

S.A. AMOS
ADVANCED MECHANICAL AND OPTICAL SYSTEMS

C 1967

PRL

Multi Application Solar Telescope

AMOS / 1967 / 29-02 : BOM

Bill Of Material

SCOPE

The aim of this document is to present all devices involved in the control (motion, thermal, vacuum, …) by material type with the quantity for each type.

Issue	Date	Modifications
1.A	10/07/2007	First issue

COMMENTS

		Date	Signature
Prepared by	Jean-Marc TORTOLANI		
Checked by	Eric GABRIEL		
Released by	Stéfan DENIS		

S.A. AMOS
ADVANCED MECHANICAL AND OPTICAL SYSTEMS

Multi Application Solar Telescope

PRL

AMOS / 1967 / 29-02: Bill Of Material

Issue : 1.A
Date : 10/07/2007

Qty	BOM ID	Type	Brand	Product name	Brand DB name	Description
2	I_000		TBD	Not yet defined		To Be Defined
1	I_101	SQ	Balluff	BNS 819 -D04-D12-100-10		Electromechanical 4 Position Switch - series 100 Chisel (D) plunger - accuracy:0.002 mm - snap switch - plunger spacing: 12 mm
3	I_106	SQ	Balluff	see AI_101		2nd,3rd,4th contact of AI_101 electromechanical 4 position switch
1	I_111	SQ	Balluff	BNS 819 -B04-D12-61-12-10		Electromechanical 4 Position Switch - series 61 Chisel (D) plunger - accuracy:0.002 mm - snap switch - plunger spacing: 12 mm
3	I_112	SQ	Balluff	see AI_111		2nd,3rd,4th contact of AI_111 electromechanical 4 position switch
2	I_113	SQ	TBD	TBD		Limit switch
2	I_114	SQ	TBD	TBD		Linductive Limit Switch M12
1	I_120	M	PI	M-824.3DG		Hexapod - load capacity: 10 kg vertical - included controller,cables,VI
11	I_130		Coremo	TBN		Pneumatic brake - Braking force max 870 N - minimum release pressure:4.5 bar
2	I_131	SP	Festo	PEV-1/4-SC-OD		Adjustable pressure switch; Visual scale; 0.5bar hysteresis; 1 invertor contact
2	I_132	YV	Festo	To be determined		3/2 pneumatic electro-valve
1	I_140	BQ	Heidenhain	RON 905		High accuracy encoder 36 000 lines / turn accuracy 0.4" 11uA signals 1 reference signal
2	I_141	BQ	Heidenhain	ERA 880 C	325693-11	Reading Head - Output: 1 V pp
3	I_142	BQ	ASM	To be determined		Wire analogue position sensor - analogue 0…10V output or resistance
1	I_150	M	Etel	TMB 0360-050		Brushless motor without feedback sensor with temperature sensor - Inner diameter: 360 mm - Rotor width: 50 mm - water cooling - Peak torque: 707 Nm - Stall torque: 291 Nm
1	I_151	M	Etel	TMB 0450-030		Brushless motor without feedback sensor with temperature sensor - Inner diameter: 450 mm - Rotor width: 30 mm - water cooling - Peak torque: 699 Nm - Stall torque: 291 Nm
1	I_152	M	Aerotech	ALAR-250-SP-2		Motorized table - clear aperture: 250 mm - sine encoder: 64800 lines/turn - 14.2 N.m con. Torque - Max axial load: 4950 N - Max moment load: 1825 N.m
1	I_153	M	TBD	TBD		Asyncronous motor 0,18 kW
1	I_154	M	Danaher	DBL3-M00190		Brushless DC motor - Nominal speed: 3000 rpm - Continuous torque: 1,6 N.m - Nominal current: 1,26 A - Resolver feedback - Flange: 75 mm x 75 mm

AMOS / 1967 / 29-02: Bill Of Material

Issue : 1.A
Date : 10/07/2007

Qty	BOM ID	Type	Brand	Product name	Brand DB name	Description
2	I_155	M	Danaher	AKM54G		Brushless DC motor - Nominal speed: 1500 rpm - Continuous torque: 12.9 N.m - Standstill current: 14.3 A - Resolver feedback - Flange: 108 mm x 108 mm - Weight: 9 kg
1	I_160	A	Aerotech	SOLOISTCL10		Linear amplifier +/- 40 V DC; 5 A cont; 10 A peak
1	I_162	A	Danaher	Servostar 341	S30101	Brushless ampliifer In: 3*400 V AC - Out: I cont: 1.5 A - I peak: 4.5 A - CAN port
2	I_163	A	Danaher	Servostar 346	S30601	Brushless ampliifer In: 3*400 V AC - Out: I cont: 6 A - I peak: 12 A - CAN port
1	I_180	A	B&R	X20CP1484		PLC CPU X20; Intel Celeron; 800µs cycle; RS232; 2 USB; 1 Ethernet; 1 Powerlink; 1 slot (CANopen possibility)
3	I_181	A	B&R	X20AO2622		PLC 2 analog outputs 16 bits 0 … 10 V - 0 … 20 mA
2	I_182	A	B&R	X20AT2222		PLC 2 analog inputs for resistance resolution (PT1000: 0.013K)
2	I_190	BT	Minco	To be determined		Pt 1000 thermal sensor - 3-wires - Accuracy:
1	M_102	SQ	Balluff	BNI-LAH-1204-160-B		Rotary cam tray - 4 channels - R: 160 mm - 180°
2	M_103	SQ	Balluff	BNN-TR-001-160-12		Rotary cam trip - R:160 mm - swept angle: 1°
2	M_104	SQ	Balluff	BNN-TR-002-160-12		Rotary cam trip - R:160 mm - swept angle: 2°
1	M_105	SQ	Balluff	BNN-TR-003-160-12		Rotary cam trip - R:160 mm - swept angle: 3°
1	M_107	SQ	Balluff	BNI-LAH-1204-500-B		Rotary cam tray - 4 channels - R: 500 mm - 180°
2	M_108	SQ	Balluff	BNN-TR-001-500-12		Rotary cam trip - R:500 mm - swept angle: 1°
2	M_109	SQ	Balluff	BNN-TR-002-500-12		Rotary cam trip - R:500 mm - swept angle: 2°
1	M_110	SQ	Balluff	BNN-TR-003-500-12		Rotary cam trip - R:500 mm - swept angle: 3°
1	M_120		Rollix	88-0550-01		Cross roller bearing - Inner diameter: 479 mm - Outer diameter: 621 mm - Axial run-out: 8 um - Radial run-out: 8 um - Starting torque unloaded: 65 N.m (Slected one: 30 N.m)
2	M_121	M	Thomson	T90-B-3220-M-R-93		Linear actuator - Stroke: 700 mm - Overall length: 930 mm - Max axial load: 20 000 N - Screw: 32x20 - Rod idle torque: 3 Nm
2	M_122	M	Thomson	BGM41-3:1-S		Belt Gears - Reduction ratio: 3:1 - With clevis option S
1	M_141	BQ	Heidenhain	ERA 88O C -814.53		Encoder tape diameter: 814.53 mm - Period: 40 um -64000 lines - accuracy: 3 um - Coded reference mark

AMOS / 1967 / 29-02: BOM: Assemblies

Issue : 1.A
Date : 10/07/2007

Qty	*BOM ID*	*Type*	*Brand*	*Product name*	*Brand DB name*	*Description*
Assembly : **AI_101**			*Quantity :* **1**			*Description :* **Electromechanical 4 Position Switch with rotary cam tray and rotary cam trips (R=250 mm TBC)**
1	I_101	SQ	Balluff	BNS 819 -D04-D12-100-10		Electromechanical 4 Position Switch - series 100 Chisel (D) plunger - accuracy:0.002 mm - snap switch - plunger spacing: 12 mm
1	M_102	SQ	Balluff	BNI-LAH-1204-160-B		Rotary cam tray - 4 channels - R: 160 mm - 180°
2	M_103	SQ	Balluff	BNN-TR-001-160-12		Rotary cam trip - R:160 mm - swept angle: 1°
2	M_104	SQ	Balluff	BNN-TR-002-160-12		Rotary cam trip - R:160 mm - swept angle: 2°
1	M_105	SQ	Balluff	BNN-TR-003-160-12		Rotary cam trip - R:160 mm - swept angle: 3°
Assembly : **AI_107**			*Quantity :* **1**			*Description :* **Electromechanical 4 Position Switch with rotary cam tray and rotary cam trips (R=500 mm TBC)**
1	I_111	SQ	Balluff	BNS 819 -B04-D12-61-12-10		Electromechanical 4 Position Switch - series 61 Chisel (D) plunger - accuracy:0.002 mm - snap switch - plunger spacing: 12 mm
1	M_107	SQ	Balluff	BNI-LAH-1204-500-B		Rotary cam tray - 4 channels - R: 500 mm - 180°
2	M_108	SQ	Balluff	BNN-TR-001-500-12		Rotary cam trip - R:500 mm - swept angle: 1°
2	M_109	SQ	Balluff	BNN-TR-002-500-12		Rotary cam trip - R:500 mm - swept angle: 2°
1	M_110	SQ	Balluff	BNN-TR-003-500-12		Rotary cam trip - R:500 mm - swept angle: 3°
Assembly : **AI_141**			*Quantity :* **1**			*Description :* **Encoder tape diameter: 814.53 mm - Period: 40 um -64000 lines - accuracy: 3 um - Coded reference mark**
1	M_141	BQ	Heidenhain	ERA 88O C -814.53		Encoder tape diameter: 814.53 mm - Period: 40 um -64000 lines - accuracy: 3 um - Coded reference mark
1	I_141	BQ	Heidenhain	ERA 880 C	325693-11	Reading Head - Output: 1 V pp
Assembly : **AI_155**			*Quantity :* **2**			*Description :* **Linear actuator with belt gear and motor**
1	I_155	M	Danaher	AKM54G		Brushless DC motor - Nominal speed: 1500 rpm - Continuous torque: 12.9 N.m - Standstill current: 14.3 A - Resolver feedback - Flange: 108 mm x 108 mm - Weight: 9 kg
1	M_121	M	Thomson	T90-B-3220-M-R-93		Linear actuator - Stroke: 700 mm - Overall length: 930 mm - Max axial load: 20 000 N - Screw: 32x20 - Rod idle torque: 3 Nm
1	M_122	M	Thomson	BGM41-3:1-S		Belt Gears - Reduction ratio: 3:1 - With clevis option S

S.A. AMOS
ADVANCED MECHANICAL AND OPTICAL SYSTEMS

C 1967

PRL

Multi Application Solar Telescope

AMOS / 1967 / 29-03 : Loop

Loop Configuration

SCOPE

The project is divided in different loops. Each loop corresponds to a specific function (movement, thermal control, …).
Each equipment is labelled with the name of its loop followed by the IEC 204 symbol corresponding to its material type and a sequential number.
The aim of this document is to present an exhaustive list of all these devices sorted by loop.

Issue	Date	Modifications
1.A	10/07/2007	First issue

COMMENTS

		Date	Signature
Prepared by	Jean-Marc TORTOLANI		
Checked by	Eric GABRIEL		
Released by	Stéfan DENIS		

S.A. AMOS
ADVANCED MECHANICAL AND OPTICAL SYSTEMS

C1967

PRL

Multi Application Solar Telescope

AMOS / 1967 / 29-03 : Loop

Issue : 1.A
Date : 10/07/2007

Loop names

Number	*Name*	*Mechanical reference*
000	**General**	
010	High voltage power supply and distribution	
020	Low voltage power supply and distribution	
070	TELESCOPE CONTROL SYSTEM	
071	GUI module	
072	Real time module	
073	Data logging module	
074	GPS receiver	
080	Safety loop	
090	MECHANISM CONTROL SYSTEM	
091	Main servo-controller	
092	Master PLC	
100	**ELEVATION MECHANISM**	
110	Elevation motorisation	1967-21-00-00
130	Upper Sun Shield motorisation	
200	**M2 UNIT**	
210	Hexapod motorisation	
220	Wave Front Sensor	
300	**M1 UNIT**	
310	M1 cover	
400	**AZIMUTH MECHANISM**	
410	Azimuth motorisation	1967-31-00-00
430	Azimuth cable wrap	
500	**DEROTATOR MECHANISM**	
510	Derotation motorisation	
600	**AUTO GUIDING UNIT**	
610	AGU CCD	
700	**PRL SUPPLY**	
710	Polarimeter	

Multi Application Solar Telescope

Loop names

Number	Name	Mechanical reference
720	Weather Station	
800	**THERMAL CONTROL**	
810	M1 thermal control	
811	M1 Fans	
812	M1 liquid cooling	
820	M2 thermal control	
830	M3 thermal control	
890	Heat stop thermal control	
900	**AUXILIARY MODULES**	
910	Liquid cooling module	
911	Chiller	
912	Primary circuit	
920	Pneumatic group (PRL supply?)	
930	Ventilation system	

AMOS / 1967 / 29-03 Loop configuration: loop description

Issue : 1.A
Date : 10/07/2007

Loop number : **071** ***Nom :*** **GUI module** ***Correspondance mécanique :***

Item ID	*Function*	*BOM ID*	*Location*	*Brand*	*Product name*	*Description*
071 SA 1	Engineering mode key	I_000	Main Cabinet	TBD	Not yet defined	To Be Defined

Loop number : **080** *Nom :* **Safety loop** *Correspondance mécanique :*

Item ID	*Function*	*BOM ID*	*Location*	*Brand*	*Product name*	*Description*
080 SB 1	Emergency stop button on main cabinet	I_000	Main Cabinet	TBD	Not yet defined	To Be Defined

AMOS / 1967 / 29-03 Loop configuration: loop description

Issue : 1.A
Date : 10/07/2007

Loop number : **092** *Nom :* **Master PLC** *Correspondance mécanique :*

Item ID	*Function*	*BOM ID*	*Location*	*Brand*	*Product name*	*Description*
092 A 1	PLC	I_180	Main Cabinet	B&R	X20CP1484	PLC CPU X20; Intel Celeron; 800µs cycle; RS232; 2 USB; 1 Ethernet; 1 Powerlink; 1 slot (CANopen possibility)
092 A 2	Regulating valves output	I_181	Main Cabinet	B&R	X20AO2622	PLC 2 analog outputs 16 bits 0 … 10 V - 0 … 20 mA
092 A 3	Regulating valves output	I_181	Main Cabinet	B&R	X20AO2622	PLC 2 analog outputs 16 bits 0 … 10 V - 0 … 20 mA
092 A 4	Regulating valves output	I_181	Main Cabinet	B&R	X20AO2622	PLC 2 analog outputs 16 bits 0 … 10 V - 0 … 20 mA
092 A 5	Pt 1000 input	I_182	Main Cabinet	B&R	X20AT2222	PLC 2 analog inputs for resistance resolution (PT1000: 0.013K)
092 A 6	Pt 1000 input	I_182	Main Cabinet	B&R	X20AT2222	PLC 2 analog inputs for resistance resolution (PT1000: 0.013K)

Loop number : **110** ***Nom :*** **Elevation motorisation** ***Correspondance mécanique :*** **1967-21-00-00**

Item ID	*Function*	*BOM ID*	*Location*	*Brand*	*Product name*	*Description*
110 YV 1	Brake Valve	I_132	Az CWP	Festo	To be determined	3/2 pneumatic electro-valve
110 BQ 1	Encoder	I_140	Fork	Heidenhain	RON 905	High accuracy encoder 36 000 lines / turn accuracy 0.4" 11uA signals 1 referenc signal
110 M 1	Motor	I_150	Fork	Etel	TMB 0360-050	Brushless motor without feedback sensor with temperature sensor - Inner diameter: 360 mm - Rotor width: 50 mm - water cooling - Peak torque: 707 Nm - Stall torque: 291 Nm
110 SP 1	Pressure in Brake Circuit Switch	I_131	Fork	Festo	PEV-1/4-SC-OD	Adjustable pressure switch; Visual scale; 0.5bar hysteresis; 1 invertor contact
110 SQ 1	Power Off Limit Switch	I_101	Fork	Balluff	BNS 819 -D04-D12-100-10	Electromechanical 4 Position Switch - series 100 Chisel (D) plunger - accuracy:0.002 mm - snap switch - plunger spacing: 12 mm
110 SQ 2	Positive Drive Limit Switch	I_106	Fork	Balluff	see AI_101	2nd,3rd,4th contact of AI_101 electromechanical 4 position switch
110 SQ 3	Home Switch	I_106	Fork	Balluff	see AI_101	2nd,3rd,4th contact of AI_101 electromechanical 4 position switch
110 SQ 4	Negative Drive Limit Switch	I_106	Fork	Balluff	see AI_101	2nd,3rd,4th contact of AI_101 electromechanical 4 position switch
110 YP 1	Pneumatic brake #1	I_130	Fork	Coremo	TBN	Pneumatic brake - Braking force max 870 N - minimum release pressure:4.5 bar
110 YP 2	Pneumatic brake #2	I_130	Fork	Coremo	TBN	Pneumatic brake - Braking force max 870 N - minimum release pressure:4.5 bar
110 YP 3	Pneumatic brake #3	I_130	Fork	Coremo	TBN	Pneumatic brake - Braking force max 870 N - minimum release pressure:4.5 bar
110 YP 4	Pneumatic brake #4	I_130	Fork	Coremo	TBN	Pneumatic brake - Braking force max 870 N - minimum release pressure:4.5 bar

AMOS / 1967 / 29-03 Loop configuration: loop description

Issue : 1.A
Date : 10/07/2007

Loop number : **130** *Nom :* **Upper Sun Shield motorisation** *Correspondance mécanique :*

Item ID	Function	BOM ID	Location	Brand	Product name	Description
130 M 1	Master actuator (Elevation motor side)	I_155	Az CWP	Danaher	AKM54G	Brushless DC motor - Nominal speed: 1500 rpm - Continuous torque: 12.9 N.m - Standstill current: 14.3 A - Resolver feedback - Flange: 108 mm x 108 mm - Weight: 9 kg
130 M 2	Slave actuator (Elevation brake side)	I_155	Az CWP	Danaher	AKM54G	Brushless DC motor - Nominal speed: 1500 rpm - Continuous torque: 12.9 N.m - Standstill current: 14.3 A - Resolver feedback - Flange: 108 mm x 108 mm - Weight: 9 kg
130 A 1	Master Amplifier (Speed or Position control)	I_163	Fork Cabinet	Danaher	Servostar 346	Brushless ampliifer In: 3*400 V AC - Out: I cont: 6 A - I peak: 12 A - CAN port
130 A 2	Slave Amplifier (Electronic gearing control)	I_163	Fork Cabinet	Danaher	Servostar 346	Brushless ampliifer In: 3*400 V AC - Out: I cont: 6 A - I peak: 12 A - CAN port
130 BQ 1	"Master" Position sensor	I_142	Up Sun Sh	ASM	To be determined	Wire analogue position sensor - analogue 0…10V output or resistance
130 BQ 2	"Slave" Position sensor	I_142	Up Sun Sh	ASM	To be determined	Wire analogue position sensor - analogue 0…10V output or resistance

Loop number : **210** *Nom :* **Hexapod motorisation** *Correspondance mécanique :*

Item ID	*Function*	*BOM ID*	*Location*	*Brand*	*Product name*	*Description*
210 M 1	Hexapod	I_120	Tube	PI	M-824.3DG	Hexapod - load capacity: 10 kg vertical - included controller,cables,VI

AMOS / 1967 / 29-03 Loop configuration: loop description

Issue : 1.A
Date : 10/07/2007

Loop number : 310 **Nom :** M1 cover **Correspondance mécanique :**

Item ID	Function	BOM ID	Location	Brand	Product name	Description
310 M 1	Motor	I_153	Tube	TBD	TBD	Asyncronous motor 0,18 kW
310 SQ 1	Cover Extended Switch	I_113	Tube	TBD	TBD	Limit switch
310 SQ 2	Cover Retracted Switch	I_113	Tube	TBD	TBD	Limit switch

Loop number : 410 **Nom :** Azimuth motorisation **Correspondance mécanique :** 1967-31-00-00

Item ID	Function	BOM ID	Location	Brand	Product name	Description
410 be 1	Bearing	M_120	G.I.S.	Rollix	88-0550-01	Cross roller bearing - Inner diameter: 479 mm - Outer diameter: 621 mm - Axial run-out: 8 um - Radial run-out: 8 um - Starting torque unloaded: 65 N.m (Slected one: 30 N.m)
410 BQ 1	Reading Head #1	M_141	G.I.S.	Heidenhain	ERA 88O C -814.53	Encoder tape diameter: 814.53 mm - Period: 40 um -64000 lines - accuracy: 3 um - Coded reference mark
410 BQ 2	Reading Head #2	I_141	G.I.S.	Heidenhain	ERA 880 C	Reading Head - Output: 1 V pp
410 M 1	Motor	I_151	G.I.S.	Etel	TMB 0450-030	Brushless motor without feedback sensor with temperature sensor - Inner diameter: 450 mm - Rotor width: 30 mm - water cooling - Peak torque: 699 Nm - Stall torque: 291 Nm
410 SP 1	Pressure in Brake Circuit Switch	I_131	G.I.S.	Festo	PEV-1/4-SC-OD	Adjustable pressure switch; Visual scale; 0.5bar hysteresis; 1 invertor contact
410 SQ 1	Power Off Limit Switch	I_111	G.I.S.	Balluff	BNS 819 -B04-D12-61-12-10	Electromechanical 4 Position Switch - series 61 Chisel (D) plunger - accuracy:0.002 mm - snap switch - plunger spacing: 12 mm
410 SQ 2	Positive Drive Limit Switch	I_112	G.I.S.	Balluff	see AI_111	2nd,3rd,4th contact of AI_111 electromechanical 4 position switch
410 SQ 3	Home Switch	I_112	G.I.S.	Balluff	see AI_111	2nd,3rd,4th contact of AI_111 electromechanical 4 position switch
410 SQ 4	Negative Drive Limit Switch	I_112	G.I.S.	Balluff	see AI_111	2nd,3rd,4th contact of AI_111 electromechanical 4 position switch
410 YP 1	Pneumatic brake #1	I_130	G.I.S.	Coremo	TBN	Pneumatic brake - Braking force max 870 N - minimum release pressure:4.5 bar
410 YP 2	Pneumatic brake #2	I_130	G.I.S.	Coremo	TBN	Pneumatic brake - Braking force max 870 N - minimum release pressure:4.5 bar
410 YP 3	Pneumatic brake #3	I_130	G.I.S.	Coremo	TBN	Pneumatic brake - Braking force max 870 N - minimum release pressure:4.5 bar
410 YP 4	Pneumatic brake #4	I_130	G.I.S.	Coremo	TBN	Pneumatic brake - Braking force max 870 N - minimum release pressure:4.5 bar
410 YP 5	Pneumatic brake #5	I_130	G.I.S.	Coremo	TBN	Pneumatic brake - Braking force max 870 N - minimum release pressure:4.5 bar
410 YP 6	Pneumatic brake #6	I_130	G.I.S.	Coremo	TBN	Pneumatic brake - Braking force max 870 N - minimum release pressure:4.5 bar
410 YP 7	Pneumatic brake #7	I_130	G.I.S.	Coremo	TBN	Pneumatic brake - Braking force max 870 N - minimum release pressure:4.5 bar
410 YV 1	Brake Valve	I_132	Main Cabinet	Festo	To be determined	3/2 pneumatic electro-valve

Loop number : **430** ***Nom :*** **Azimuth cable wrap** ***Correspondance mécanique :***

Item ID	*Function*	*BOM ID*	*Location*	*Brand*	*Product name*	*Description*
430 SQ 1	CW Limit switch (seen from Az motorisation)	I_114	Az CWP	TBD	TBD	Linductive Limit Switch M12
430 SQ 2	CCW Limit switch (seen from Az motorisation)	I_114	Az CWP	TBD	TBD	Linductive Limit Switch M12
430 BQ 1	Position sensor	I_142	G.I.S.	ASM	To be determined	Wire analogue position sensor - analogue 0…10V output or resistance
430 M 1	Motor	I_154	G.I.S.	Danaher	DBL3-M00190	Brushless DC motor - Nominal speed: 3000 rpm - Continuous torque: 1,6 N.m - Nominal current: 1,26 A - Resolver feedback - Flange: 75 mm x 75 mm
430 A 1	Amplifier / Position or Speed Controller	I_162	Main Cabinet	Danaher	Servostar 341	Brushless ampliifer In: 3*400 V AC - Out: I cont: 1.5 A - I peak: 4.5 A - CAN port

AMOS / 1967 / 29-03 Loop configuration: loop description

Issue : 1.A
Date : 10/07/2007

Loop number : **510** ***Nom :*** **Derotation motorisation** ***Correspondance mécanique :***

Item ID	*Function*	*BOM ID*	*Location*	*Brand*	*Product name*	*Description*
510 M 1	Turn table (with integrated encoder)	I_152	G.I.S.	Aerotech	ALAR-250-SP-2	Motorized table - clear aperture: 250 mm - sine encoder: 64800 lines/turn - 14.2 N.m con. Torque - Max axial load: 4950 N - Max moment load: 1825 N.m
510 A 1	Brushless motor amplifier	I_160	Main Cabinet	Aerotech	SOLOISTCL10	Linear amplifier +/- 40 V DC; 5 A cont; 10 A peak

AMOS / 1967 / 29-03 Loop configuration: loop description

Issue : 1.A
Date : 10/07/2007

Loop number : **810** ***Nom :*** **M1 thermal control** ***Correspondance mécanique :***

Item ID	*Function*	*BOM ID*	*Location*	*Brand*	*Product name*	*Description*
810 BT 1	M1 miror Pt 1000 t° sensor #1 (xxx)	I_190	Main Cabinet	Minco	To be determined	Pt 1000 thermal sensor - 3-wires - Accuracy:
810 BT 2	M1 miror Pt 1000 t° sensor #2 (xxx)	I_190	Main Cabinet	Minco	To be determined	Pt 1000 thermal sensor - 3-wires - Accuracy:

AMOS S.A.
ADVANCED MECHANICAL AND OPTICAL SYSTEMS

C 1967

PRL

Multi Application Solar Telescope

AMOS / 1967 / 29-05 : Position

Position Range Diagram

SCOPE

This document shows the location of the differents position sensors, the range where they are activated and their relative positions. It shows also the software limits and mechanical end-stops. Finally, it indicates the funtion of each sensor.

Issue	*Date*	*Modifications*
1.A	*10/07/2007*	PDR issue

COMMENTS

		Date	*Signature*
Prepared by	Eric GABRIEL		
Checked by	Christophe DELREZ		
Released by	Stéfan DENIS		

AMOS *sa* C 1967 29-05 issue dr: Limit Switch Diagrams MAST

Equipment : *Elevation axis*
Control Loops : *110*

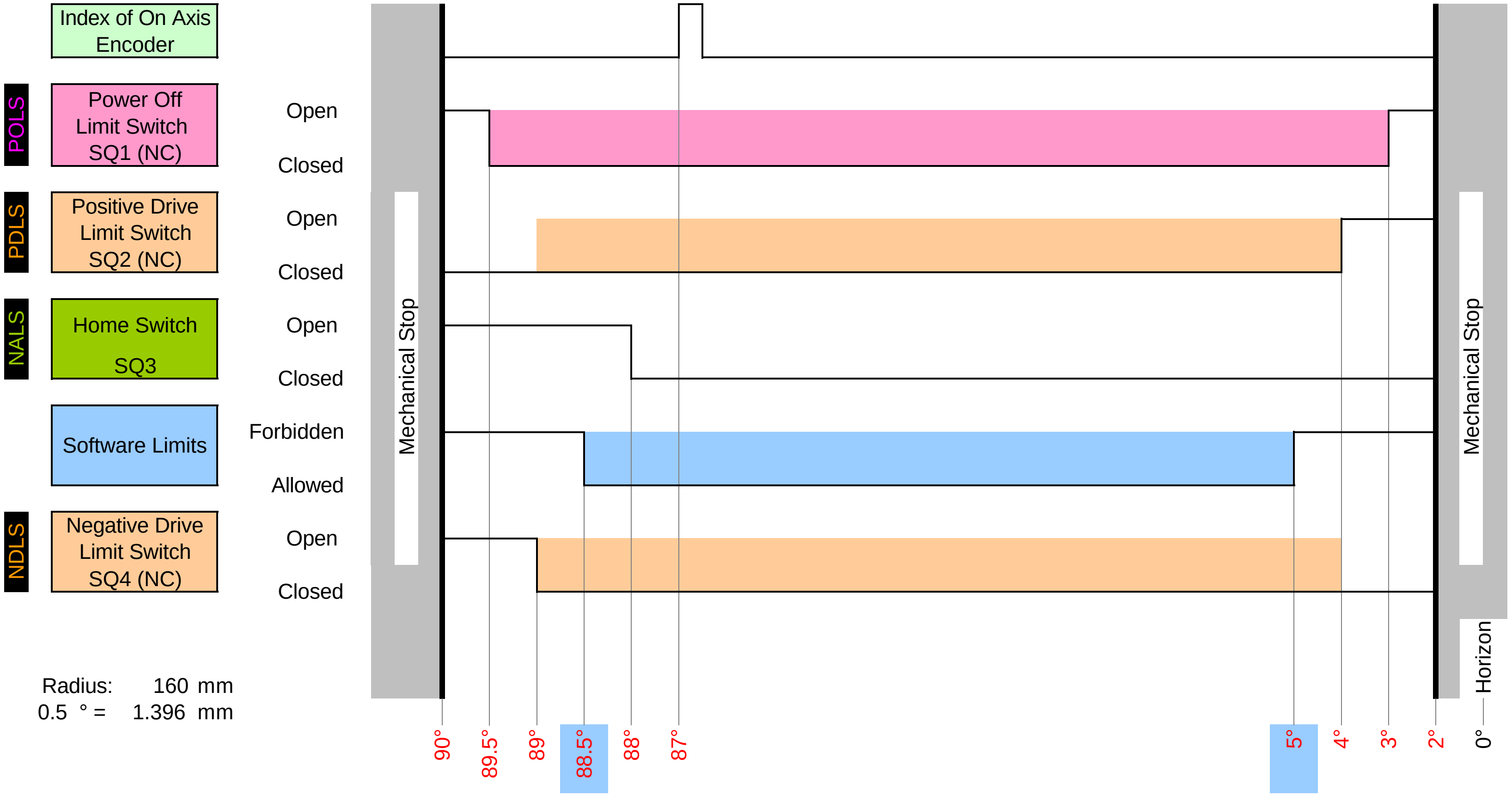

Radius: 160 mm
0.5 ° = 1.396 mm

Maximum deceleration:
250 °/s²

Software limits are integrated in the TCS. Operator can not command the telescope to move outside the corresponding range.
An error message is generated by the TCS and the move is refused.

Drive Limit Switches decelerate the telescope from the operational speed down to a complete stop before reaching PowerOff Switch
They are input to drives which decelerate. Recovering is possible by sending a command in the opposite direction.

Power Off Limit Switch shuts off drives and activates the brake. It decelerates the telescope from the maximum safety speed
down to a complete stop before reaching mechanical end-stops. Deceleration is done by brakes assuming motor torque = 0 Nm. Recovery is done by by-passing switches

Mechanical stops decelerate the telescope without damage when they are hit at the maximum safety speed

AMOS sa C 1967 29-05 issue dr: Limit Switch Diagrams **MAST**

Equipment : *Azimuth Axis*

Control Loops : *410*

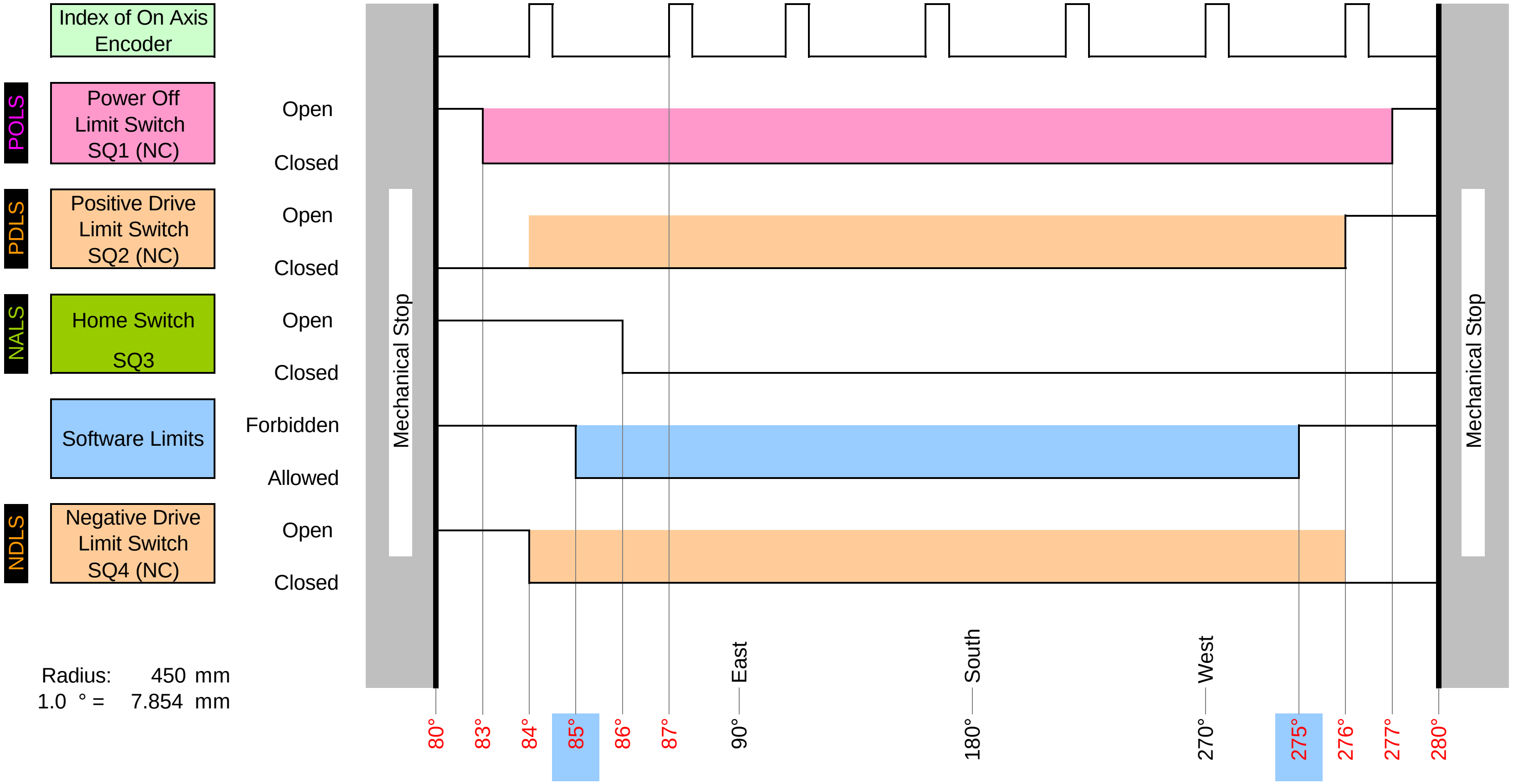

Radius: 450 mm
1.0 ° = 7.854 mm

Maximum deceleration:
250 °/s²

Software limits are integrated in the TCS. Operator can not command the telescope to move outside the corresponding range.
An error message is generated by the TCS and the move is refused.

Drive Limit Switches decelerate the telescope from the operational speed down to a complete stop before reaching PowerOff Switch
They are input to drives which decelerate. Recovering is possible by sending a command in the opposite direction.

Power Off Limit Switch shuts off drives and activates the brake. It decelerates the telescope from the maximum safety speed
down to a complete stop before reaching mechanical end-stops. Deceleration is done by brakes assuming motor torque = 0 Nm. Recovery is done by by-passing switches

Mechanical stops decelerate the telescope without damage when they are hit at the maximum safety speed

C 1967

PRL

Multi Application Solar Telescope

AMOS / 1967 / 29-14 : CWp

Cable Wrap Description

SCOPE

This document describes the different cable wraps placed as well as cable and pipes locations inside them.

Issue	Date	Modifications
1.A	9/07/2007	First issue

COMMENTS

		Date	Signature
Prepared by	Eric GABRIEL		
Checked by	Stéfan DENIS		
Released by	Stéfan DENIS		

C 1967 29-14 issue 1.A:
Cable Wrap Description
Altitude CWP

Cable name Loop	#	AMOS PRL	Signal type	Diameter [mm]	Bending radius [mm]	Comments
210	1	AMOS	Hexapod motors	10	50	Signal type TBC
210	2	AMOS	Hexapod signals	6	50	Signal type TBC
610	3	AMOS	AGU CCD Network	6	100	Ethernet link anticipated
610	4	AMOS	AGU CCD Power Supply	8	120	Low voltage
710	5	PRL	Electrical	8	120	e-mail dated 20/06/07
710	6	PRL	Electrical	8	120	e-mail dated 20/06/07
710	7	PRL	Electrical	8	120	e-mail dated 20/06/07
710	8	PRL	Electrical	8	120	e-mail dated 20/06/07
710	9	PRL	Electrical	8	120	e-mail dated 20/06/07
710	10	PRL	Electrical	8	120	e-mail dated 20/06/07
710	11	PRL	Electrical	8	120	e-mail dated 20/06/07
710	12	PRL	Electrical	8	120	e-mail dated 20/06/07
710	13	PRL	Electrical	8	120	e-mail dated 20/06/07
710	14	PRL	Electrical	8	120	e-mail dated 20/06/07
710	15	PRL	Electrical	8	120	e-mail dated 20/06/07
710	16	PRL	Electrical	8	120	e-mail dated 20/06/07
800	17	AMOS	Water to M1 exchanger	14-23-50 (1)	150	
800	18	AMOS	Water from M1 exchanger	14-23-50 (1)	150	
800	19	AMOS	Water to M2+ exchanger	14-23-50 (1)	150	Complete circuit: Heat stop-M2-Pupil-M3-M4-M5
800	20	AMOS	Water from M2+ exchanger	14-23-50 (1)	150	
800	21	AMOS	Water to M1 lower Shield	14-23-50 (1)	150	Complete circuit: Upper Sun Shield - M1 lower shield
800	22	AMOS	Water from M1 lower Shield	14-23-50 (1)	150	

(1) : Tube inner diameter - Tube outer diameter - Isolation outer diameter
(2) : Tube inner diameter - Tube outer diameter

C 1967 29-14 issue 1.A:
Cable Wrap Description
Az CWP

Cable name Loop	#	AMOS PRL	Signal type	Cable type	Diameter [mm]	Bending radius [mm]	Comments
000	1	AMOS	Digital Signals	18*0.25	10	150	Emergency stop, Limit switches, …
000	2	AMOS	Analogue Signals	8*2*0.25	10	150	Az CWP position, …
010	3	AMOS	Power Supply	5 G 1.5	10	150	3*400 VAC + N + PE
010	4	AMOS	UPS Power Supply	3 G 1.5	8	120	230 VAC + N + PE (TBC PRL)
091	5	AMOS	Optical Fiber	Plastic (2FO)	6	120	
210	6	AMOS	Hexapod Network		6	100	Connexion to the PC Ethernet link anticipated
610	7	AMOS	AGU CCD Network		6	100	Connexion to the PC Ethernet link anticipated
800	8	AMOS	Water to M1 exchanger		14-23-50 (1)	150	
800	9	AMOS	Water from M1 exchanger		14-23-50 (1)	150	
800	10	AMOS	Water to M2+ exchanger		14-23-50 (1)	150	Complete circuit: Heat stop-M2-Pupil-M3-M4-M5
800	11	AMOS	Water from M2+ exchanger		14-23-50 (1)	150	
800	12	AMOS	Water to Upper Sun Shield		14-23-50 (1)	150	Complete circuit: Upper Sun Shield - M1 lower shield
800	13	AMOS	Water from Upper Sun Shield		14-23-50 (1)	150	
800	14	AMOS	Water to motors		14-23-50 (1)	150	Complete circuit: El & Az motors - Fork cabinets
800	15	AMOS	Water from motors		14-23-50 (1)	150	
800	16	AMOS	Water circuit (spare)		14-23-50 (1)	150	
800	17	AMOS	Water circuit (spare)		14-23-50 (1)	150	
800	18	AMOS	Compressed air to M1		15.9-23 (2)	140	The compressor air circuit is also used for brake units
800	19	AMOS	Air from M1 (atmospheric pressure)	NBR tube	15.9-23 (2)	140	

(1) : Tube inner diameter - Tube outer diameter - Isolation outer diameter
(2) : Tube inner diameter - Tube outer diameter

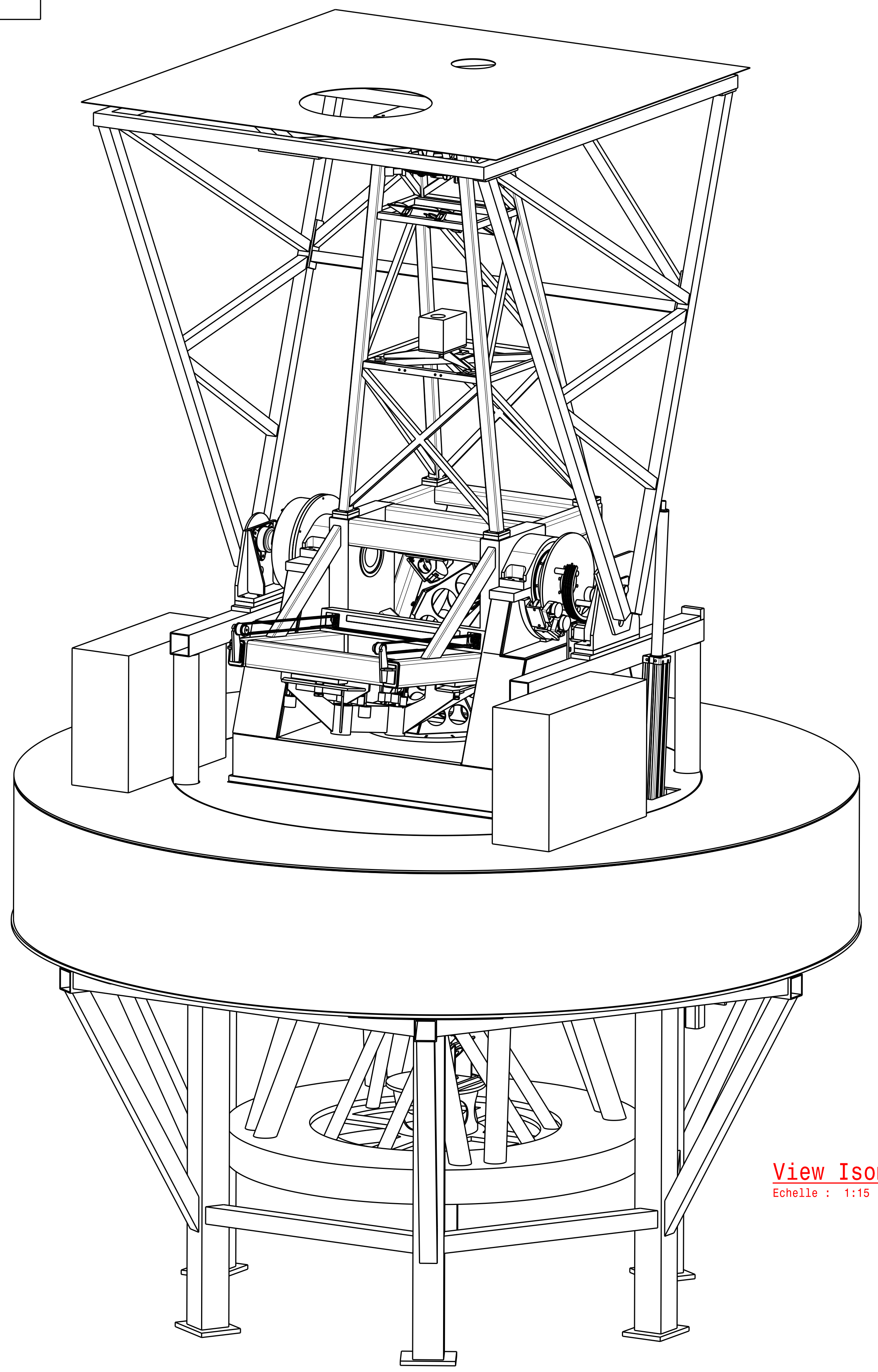

View Isometric
Echelle : 1:15

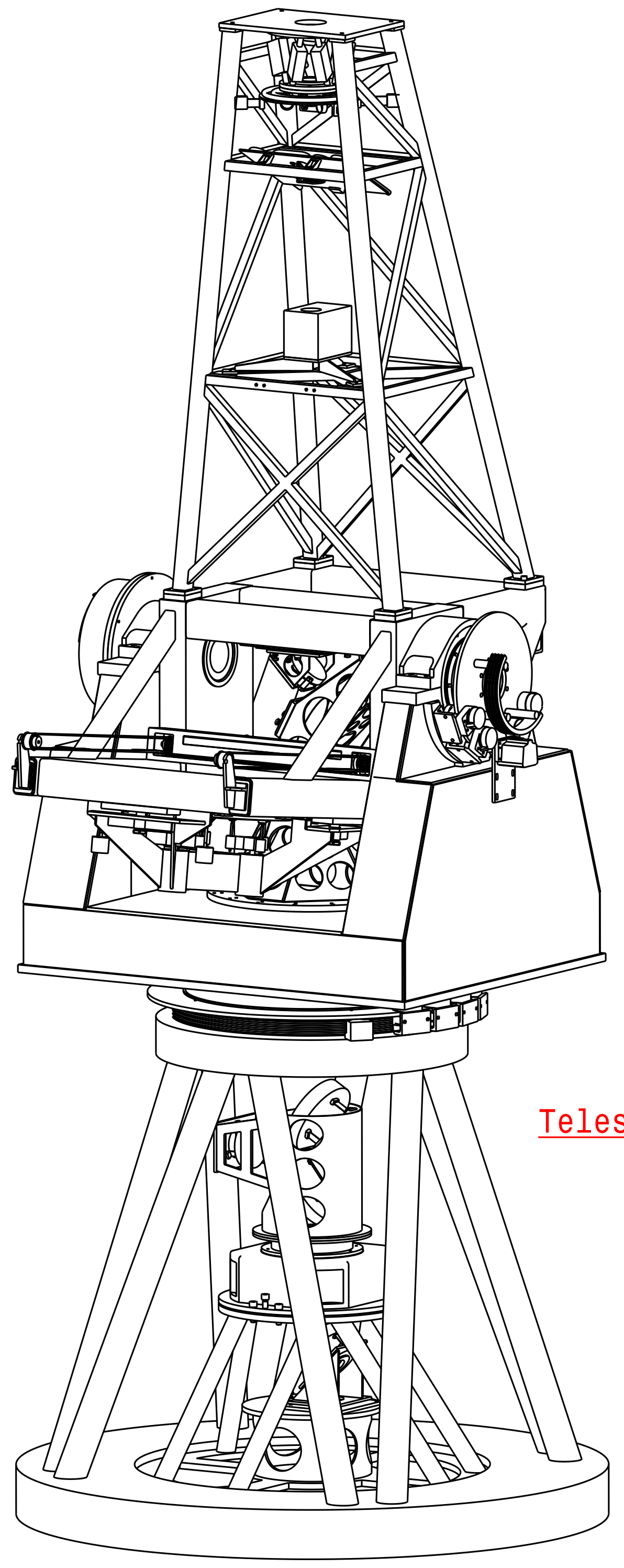

Telescope alone

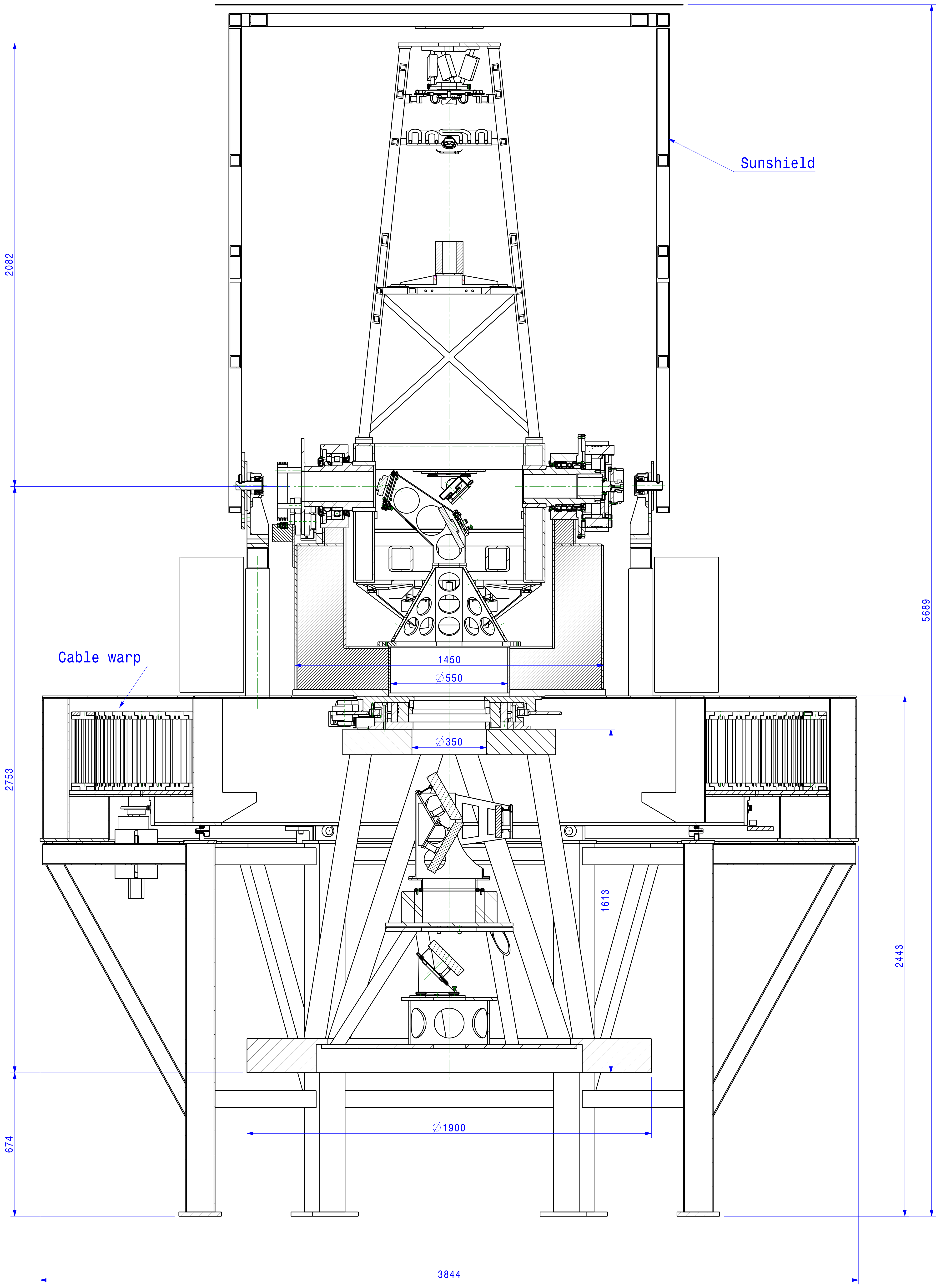

SECTION MAST
Echelle: 1:10

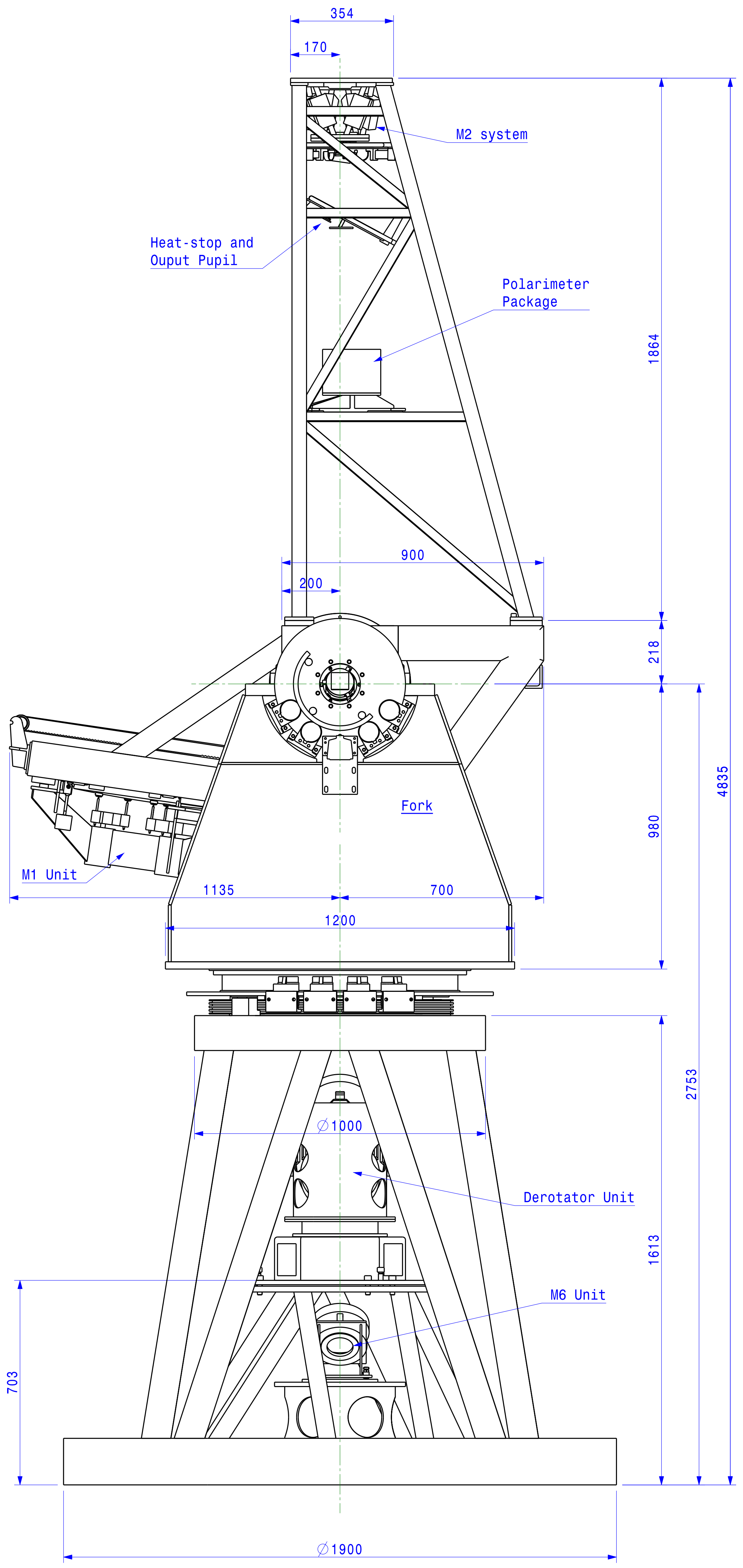

View without derotator and sunshield
Echelle : 1:10

Rep.	Nbr/Ens	Name	Drawing - Remarks - Material

AFL : Approved for Lay-out
CFA : Certified for Application
ASB : As-Built
FIN : Final - to be Archived

Document 02
Format A0
Tolerances : Machining DIN 7168-f-R
Welding AE DIN 8570

	Date	Name
Drawn	11-07-2007	BLS
Checked	-	-

SA. AMOS ADVANCED MECHANICAL AND OPTICAL SYSTEMS
Parc Scientifique du Sart-Tilman
rue des Chasseurs Ardennais
B-4031 ANGLEUR [BELGIUM]

Product Item
MAST
Solar Telescope
General VIEW
Assembly

Treatment : -
Mass.: - Kg. -
-

Scale 1/10 1/25
Drawing 1967 - 00-00-00
Sheet 1/1
Issue A
Ref. CATIA R:\1967_MAST\1967_MAST GENERALY\1967_00_00_00
Orig.

A2

Coupe A-A
Echelle : 1:15

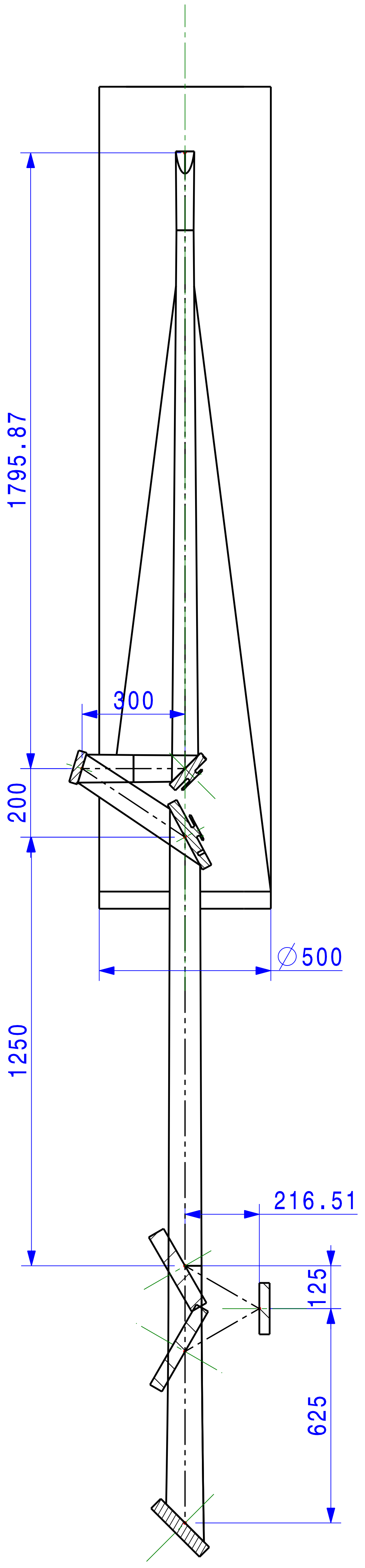

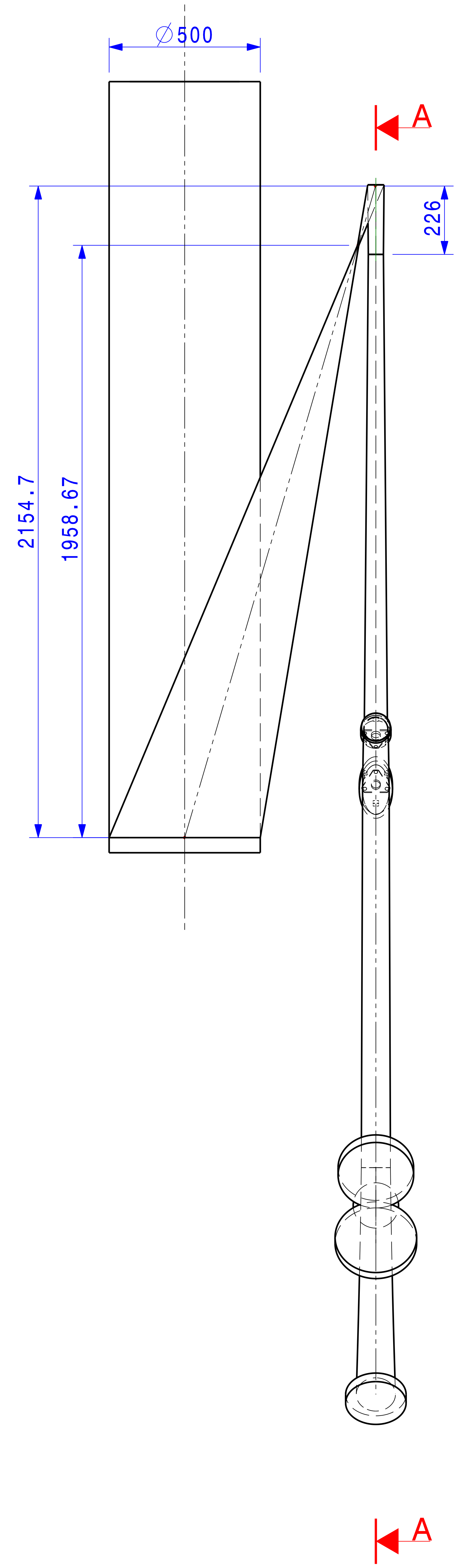

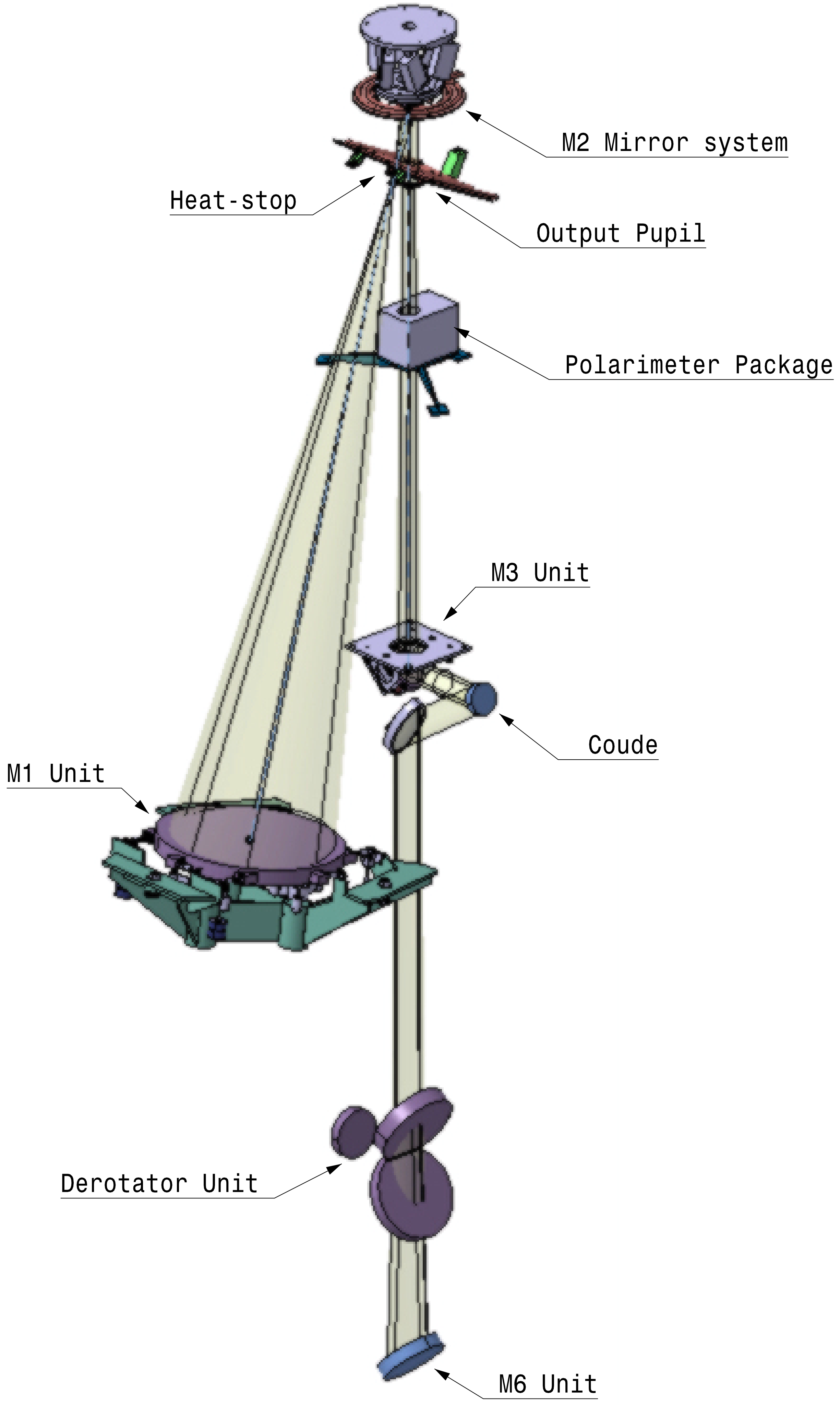

Rep.	Nbr/Ens	Name	Drawing - Remarks - Material

AFL : Approved for Lay-out
CFA : Certified for Application
ASB : As-Built
FIN : Final - to be Archived

Treatment : -
Mass.: - Kg. -
-

Document	Format
02	A2

Tolerances : Machining DIN 7168-f-R
Welding AE DIN 8570

	Date	Name
Drawn	11-07-2007	BLS
Checked	-	-

SA.
ADVANCED MECHANICAL AND OPTICAL SYSTEMS
Parc Scientifique du Sart-Tilman
rue des Chasseurs Ardennais
B-4031 ANGLEUR [BELGIUM]

Product Item
MAST
Solar telescope
Optical Path Layout
Assembly

Scale 1/20
Drawing 1967 - 00-00-10
Sheet 1/1
Issue A

Ref. CATIA R:\1967_MAST\1967_MAST GENERALY\1967-00-00-10
Orig.

A0

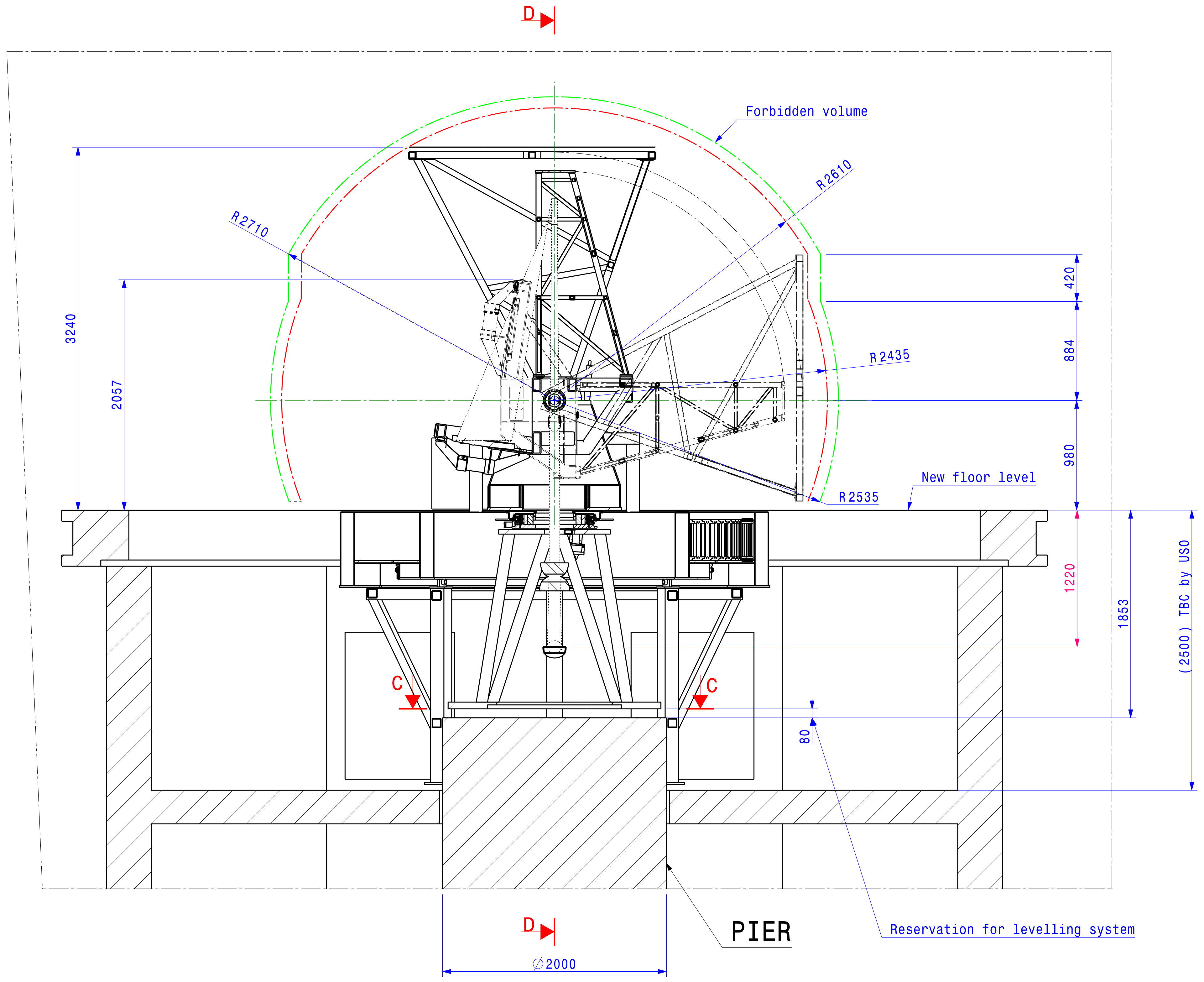

Coupe D-D

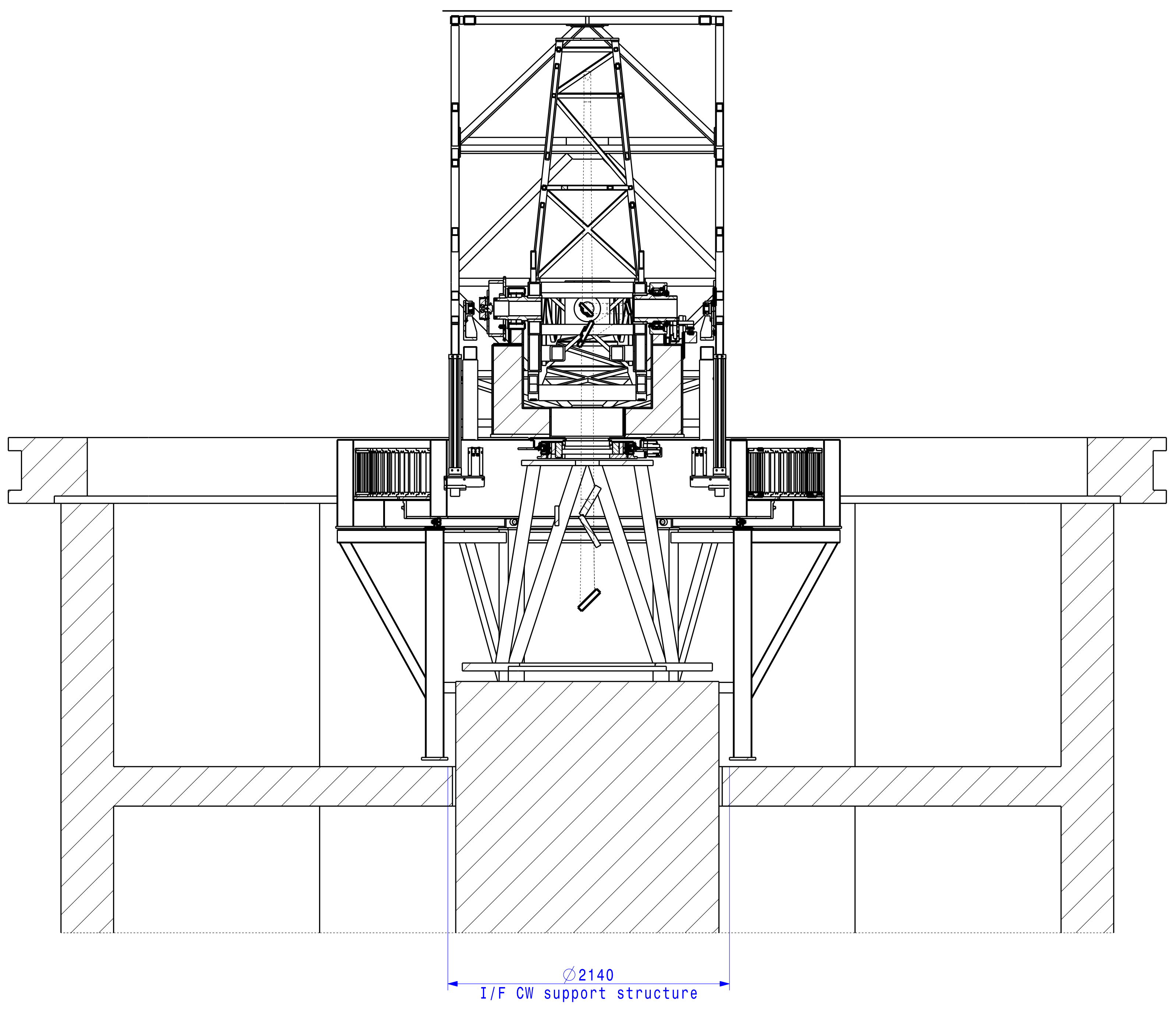

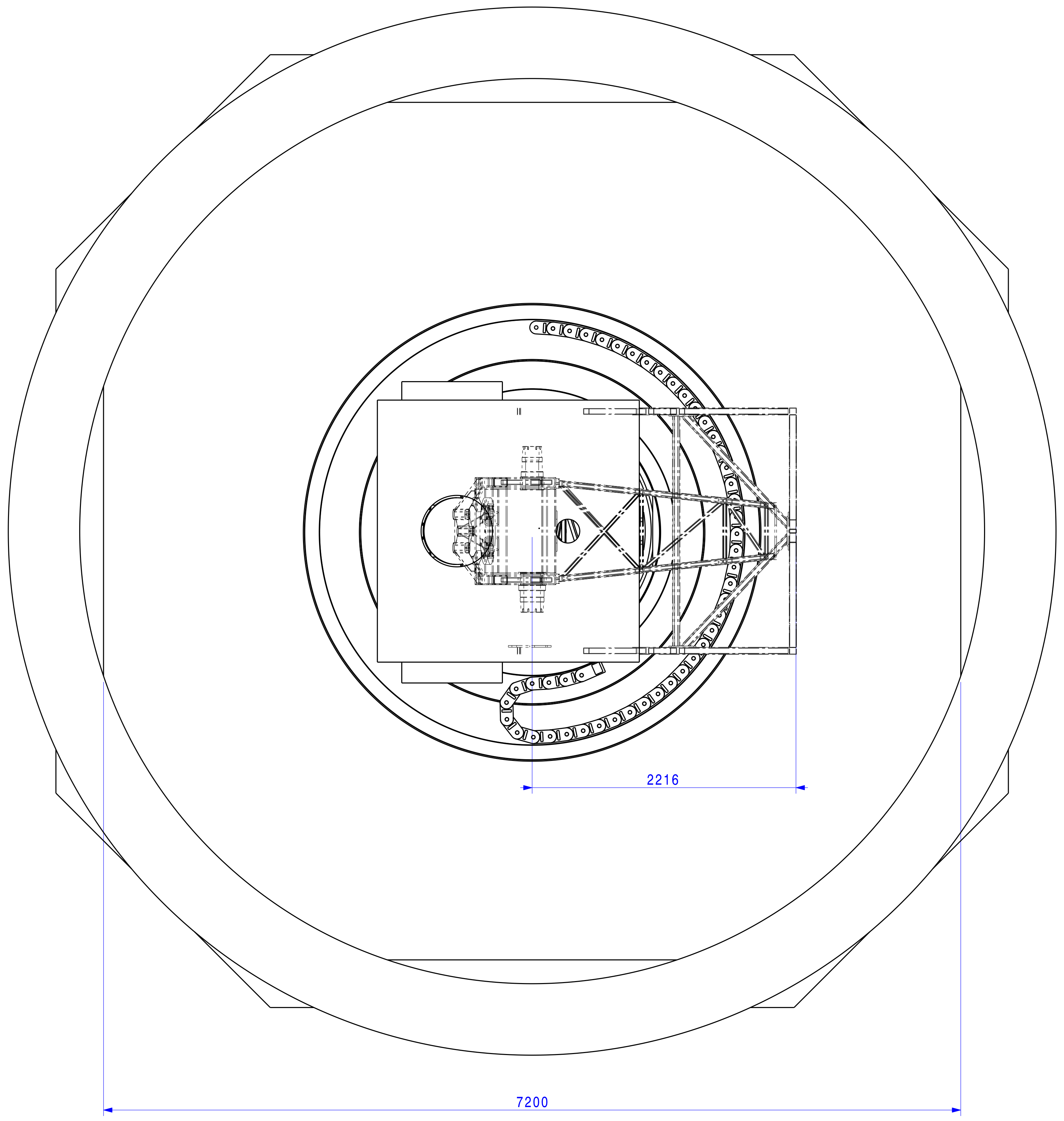

Coupe C-C

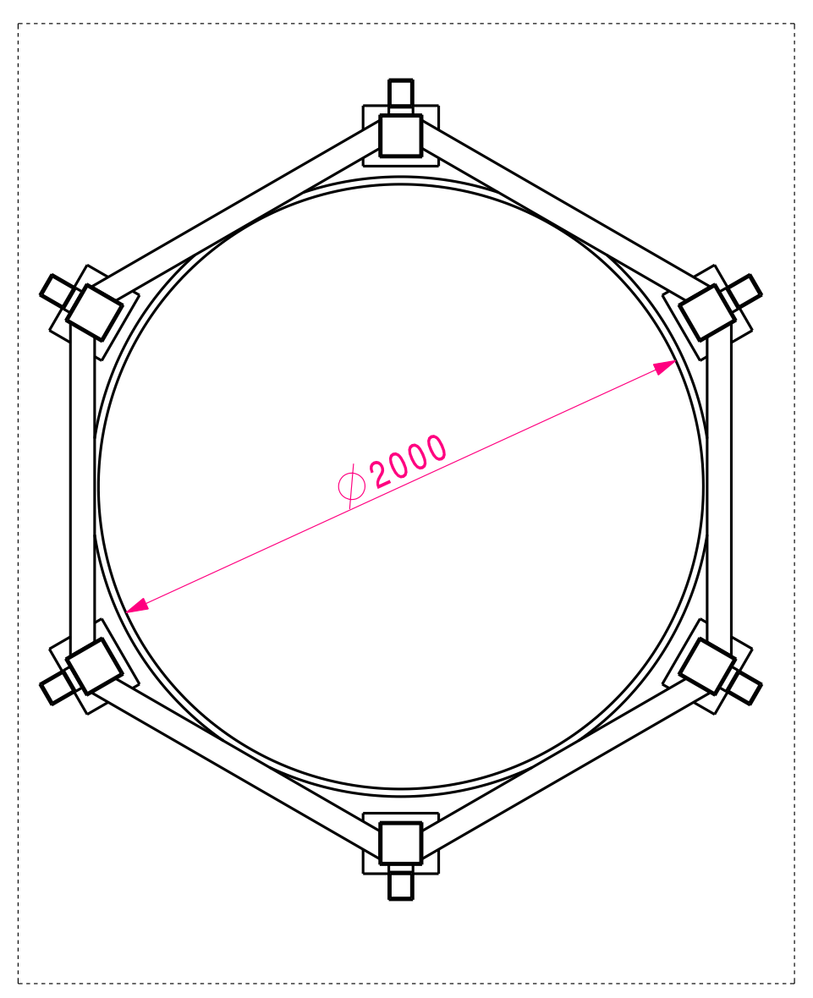

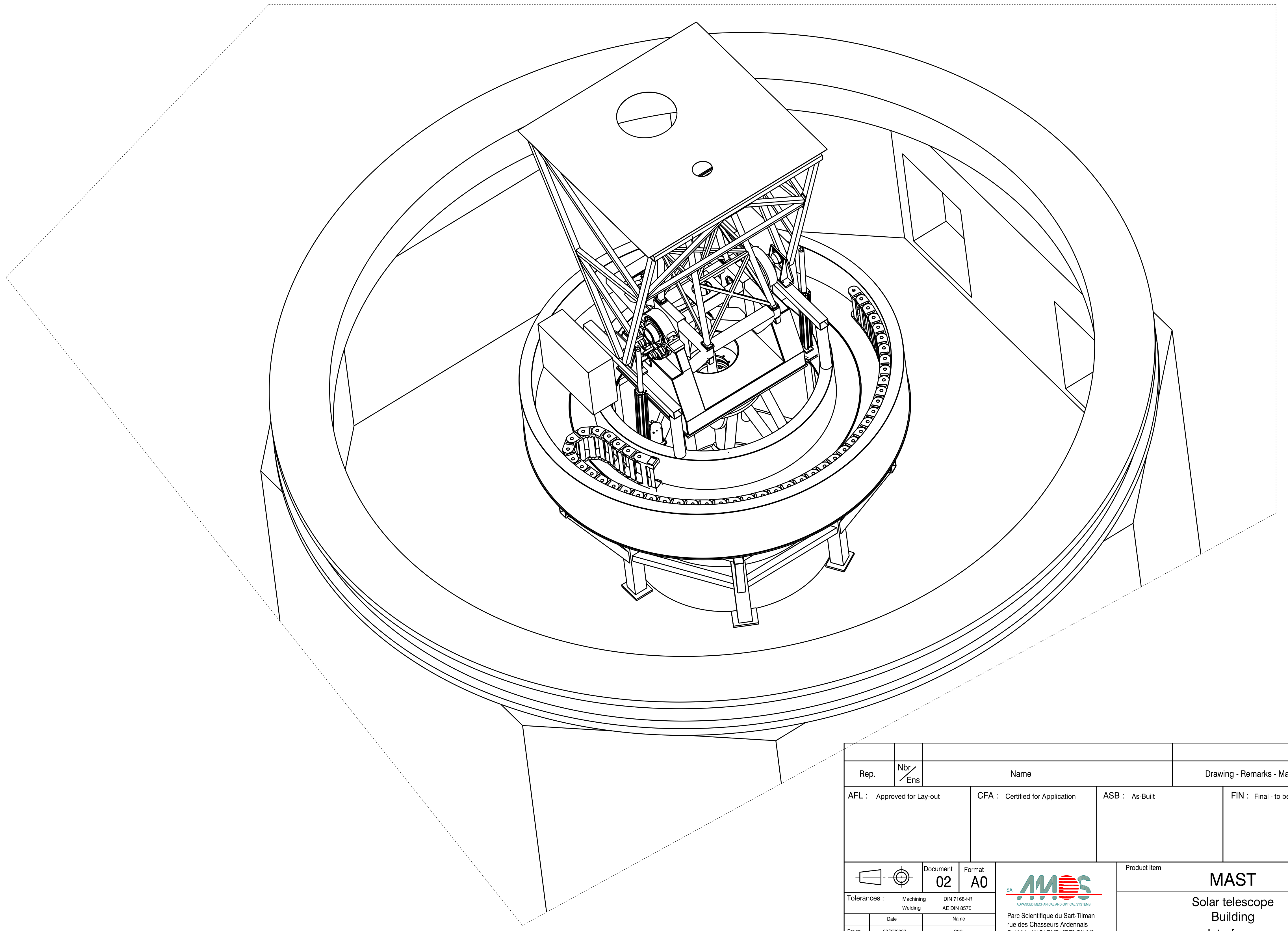

Rep.	Nbr/Ens	Name	Drawing - Remarks - Material

AFL : Approved for Lay-out	CFA : Certified for Application	ASB : As-Built	FIN : Final - to be Archived

Document 02
Format A0

Tolerances : Machining DIN 7168-f-R
Welding AE DIN 8570

	Date	Name
Drawn	03/07/2007	SFS
Checked	-	-

SA. AMOS
ADVANCED MECHANICAL AND OPTICAL SYSTEMS
Parc Scientifique du Sart-Tilman
rue des Chasseurs Ardennais
B-4031 ANGLEUR [BELGIUM]

Product Item
MAST
Solar telescope
Building
Interfaces

Treatment : -
Mass.: - Kg. -
-

Scale 1/25
Drawing 1967 - 00-00-90
Sheet 1/1
Issue A

Ref. CATIA R:\1967_MAST\1967_00_00_00\SPEC BUILDING\ENV_1967_00_00_90 Orig.

A0

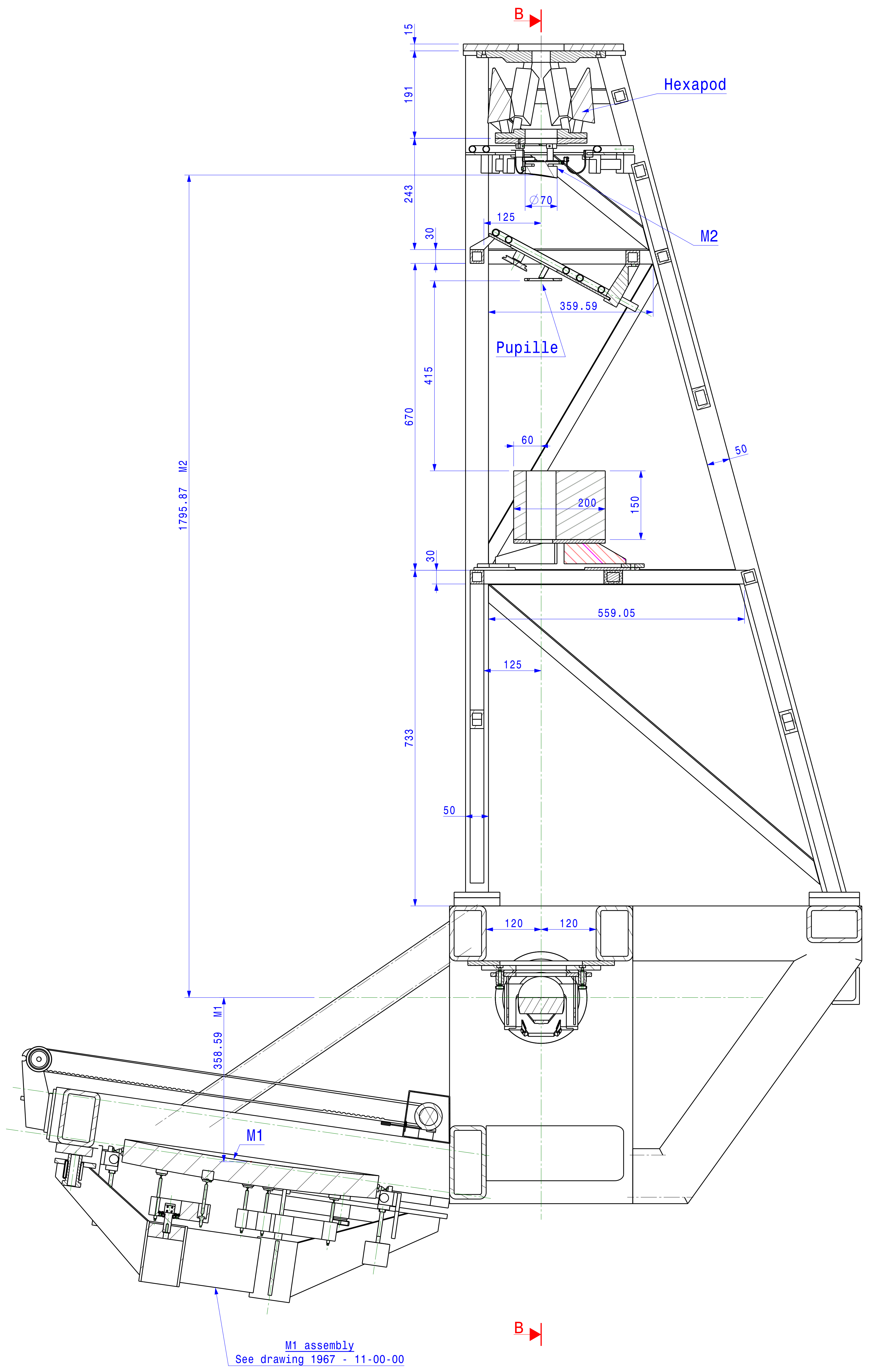

Section B-B

Scale : 1:5

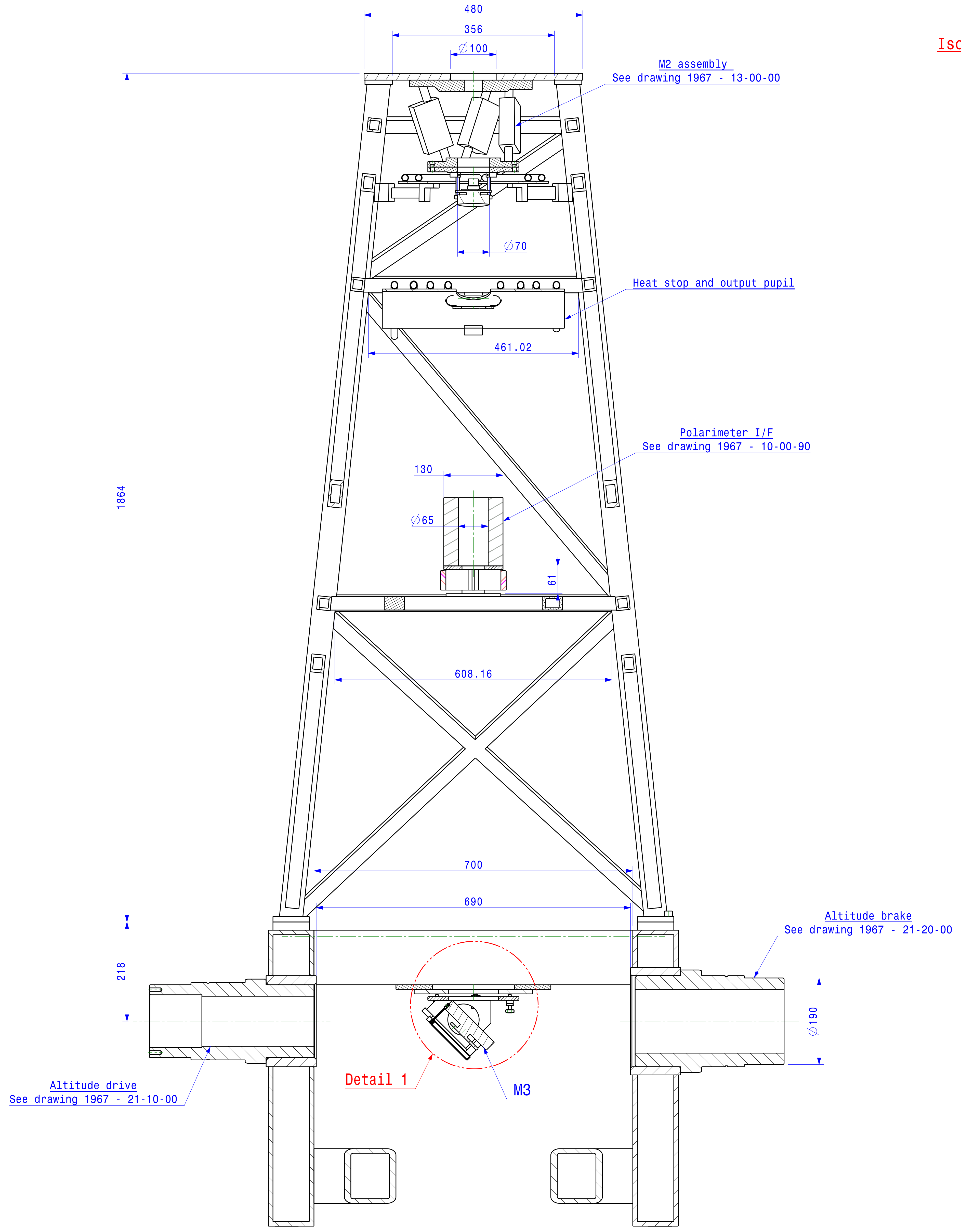

Isométric view

Scale : 1/8

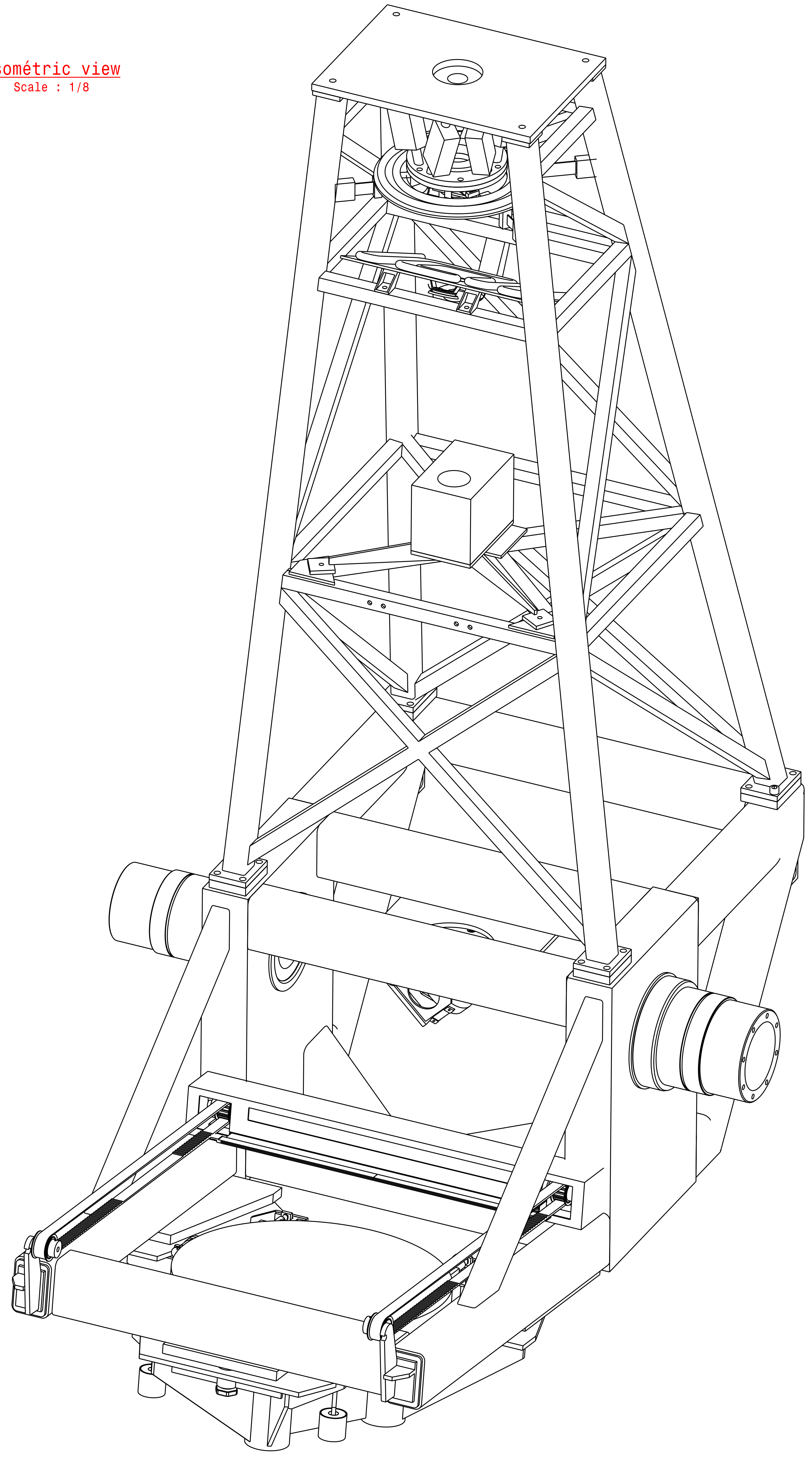

Detail 1

Scale : 2:5

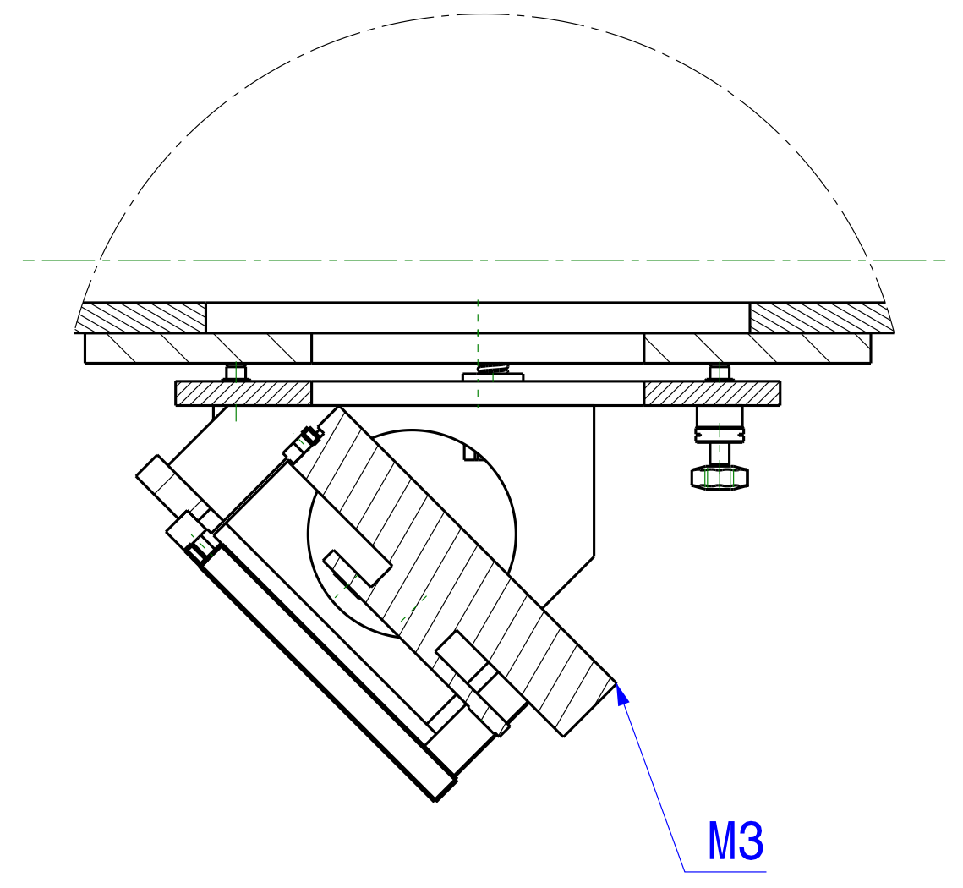

Rep.	Nbr/Ens	Name	Drawing - Remarks - Material

AFL : Approved for Lay-out
CFA : Certified for Application
ASB : As-Built
FIN : Final - to be Archived

Document 02
Format A0

Tolerances : Machining DIN 7168-f-R
Welding AE DIN 8570

	Date	Name
Drawn	29-05-2007	Lb
Checked	-	-

SA. AMOS
ADVANCED MECHANICAL AND OPTICAL SYSTEMS
Parc Scientifique du Sart-Tilman
rue des Chasseurs Ardennais
B-4031 ANGLEUR [BELGIUM]

Product Item
MAST
Solar Telescope
Tube
Assembly

Treatment : -
Mass.: - Kg. -
-

Scale 1/5 ; 1/8
Drawing 1967 - 10-00-00
Sheet 1/1
Issue A
Ref. CATIA R:\1967_MAST\1967_10_00_00_tube\1967_10_00_00
Orig.

A2

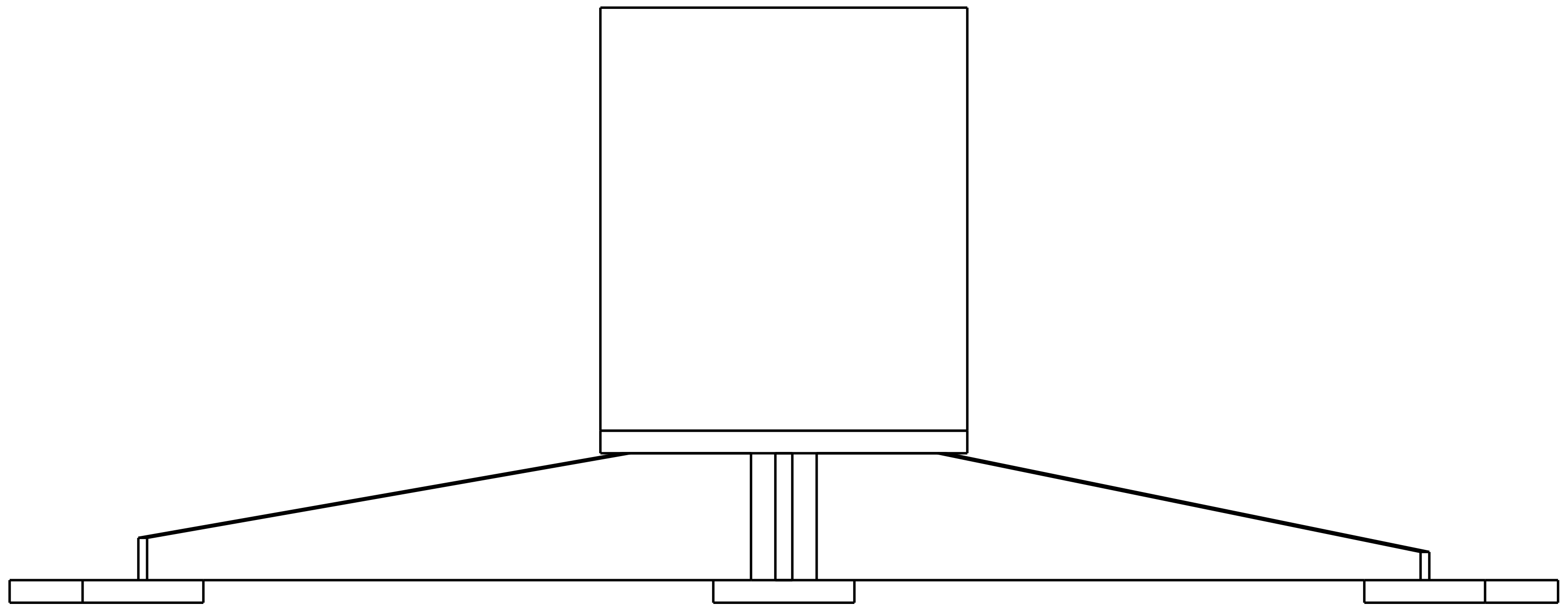

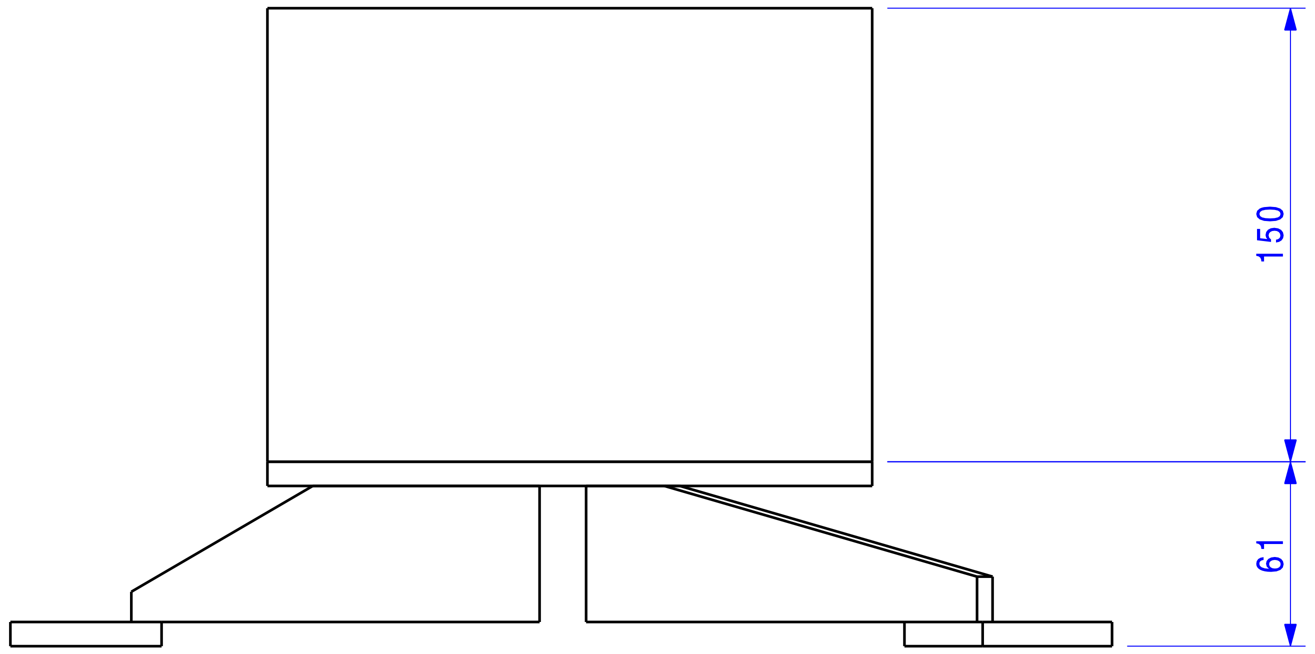

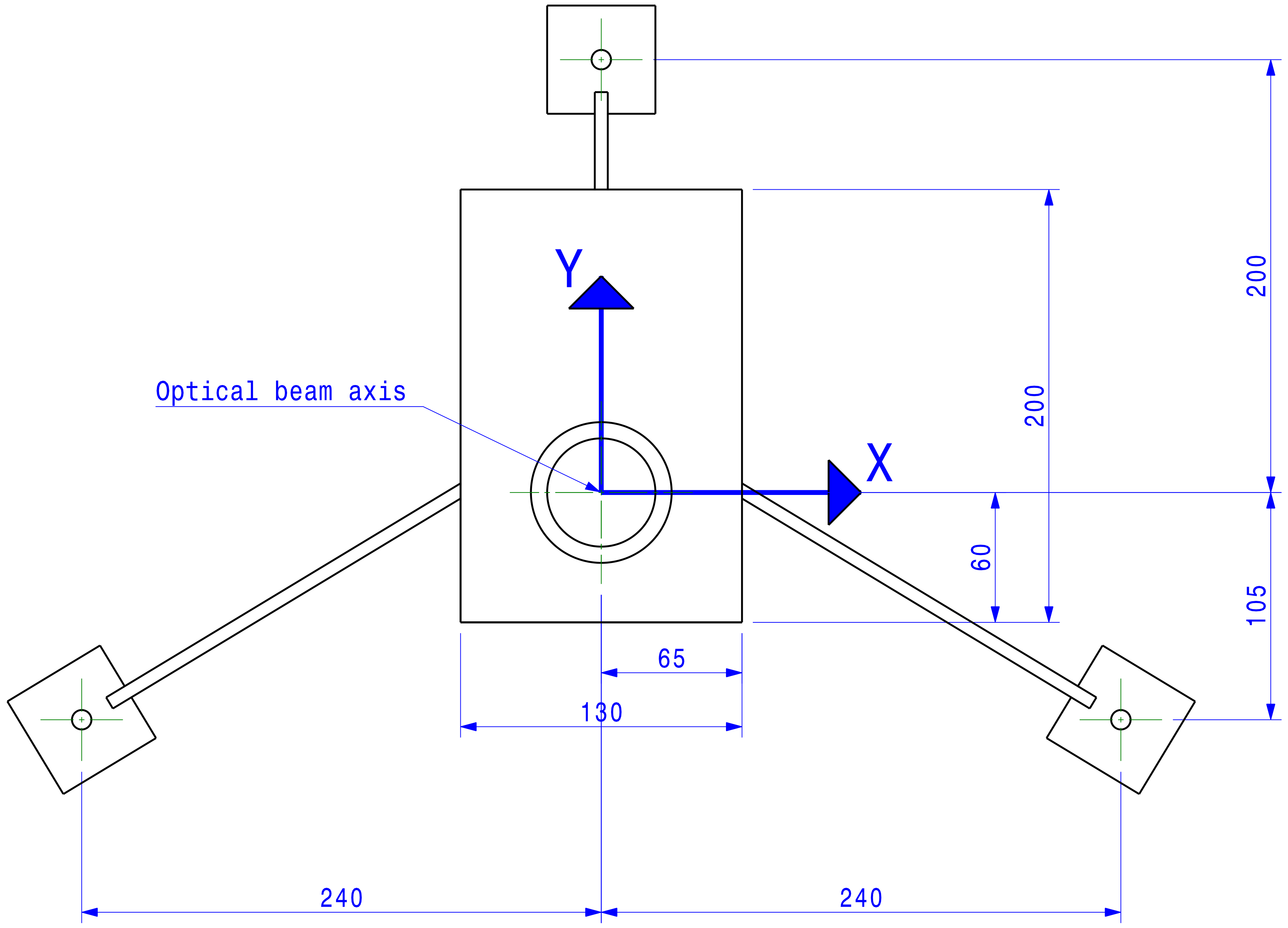

Isométric view

Scale : 2:5

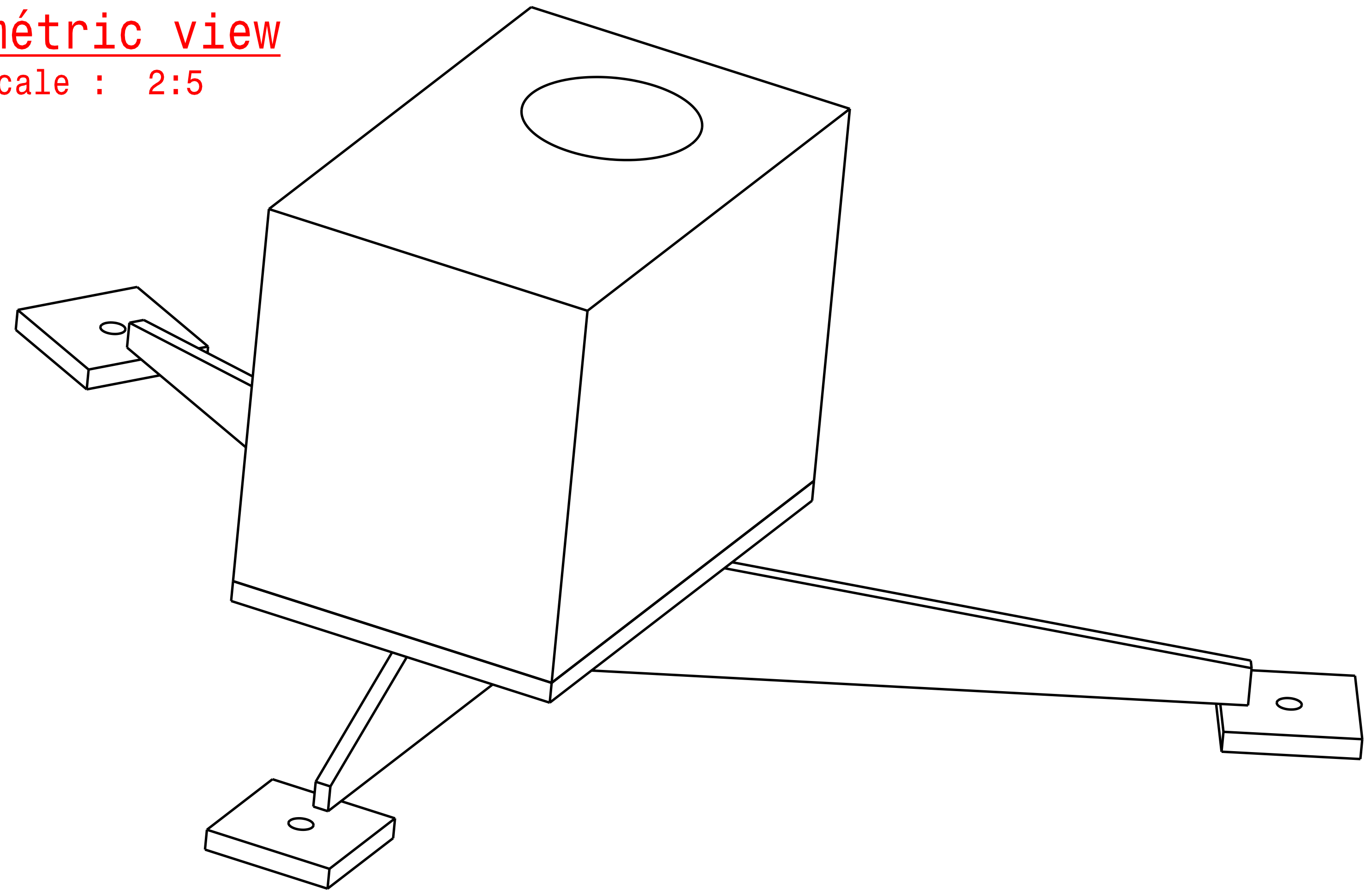

Rep.	Nbr/Ens	Name	Drawing - Remarks - Material

AFL : Approved for Lay-out

CFA : Certified for Application

ASB : As-Built

FIN : Final - to be Archived

Treatment : -

Mass.: - Kg. -

-

	Document	Format
	02	A2

Tolerances : Machining DIN 7168-f-R

Welding AE DIN 8570

	Date	Name
Drawn	04-07-2007	IBN
Checked	-	-

SA. AMOS

ADVANCED MECHANICAL AND OPTICAL SYSTEMS

Parc Scientifique du Sart-Tilman
rue des Chasseurs Ardennais
B-4031 ANGLEUR [BELGIUM]

Product Item

MAST

Solar telescope
Polarimeter I/F
Assembly

Scale: 2/5

Drawing: 1967 - 10-00-90

Sheet: 1/1

Issue: A

Ref. CATIA: R:\1967_MAST\1967_10_00_00_tube\1967_10_00_90

Orig.

A0

Section A-A
Scale : 2:5

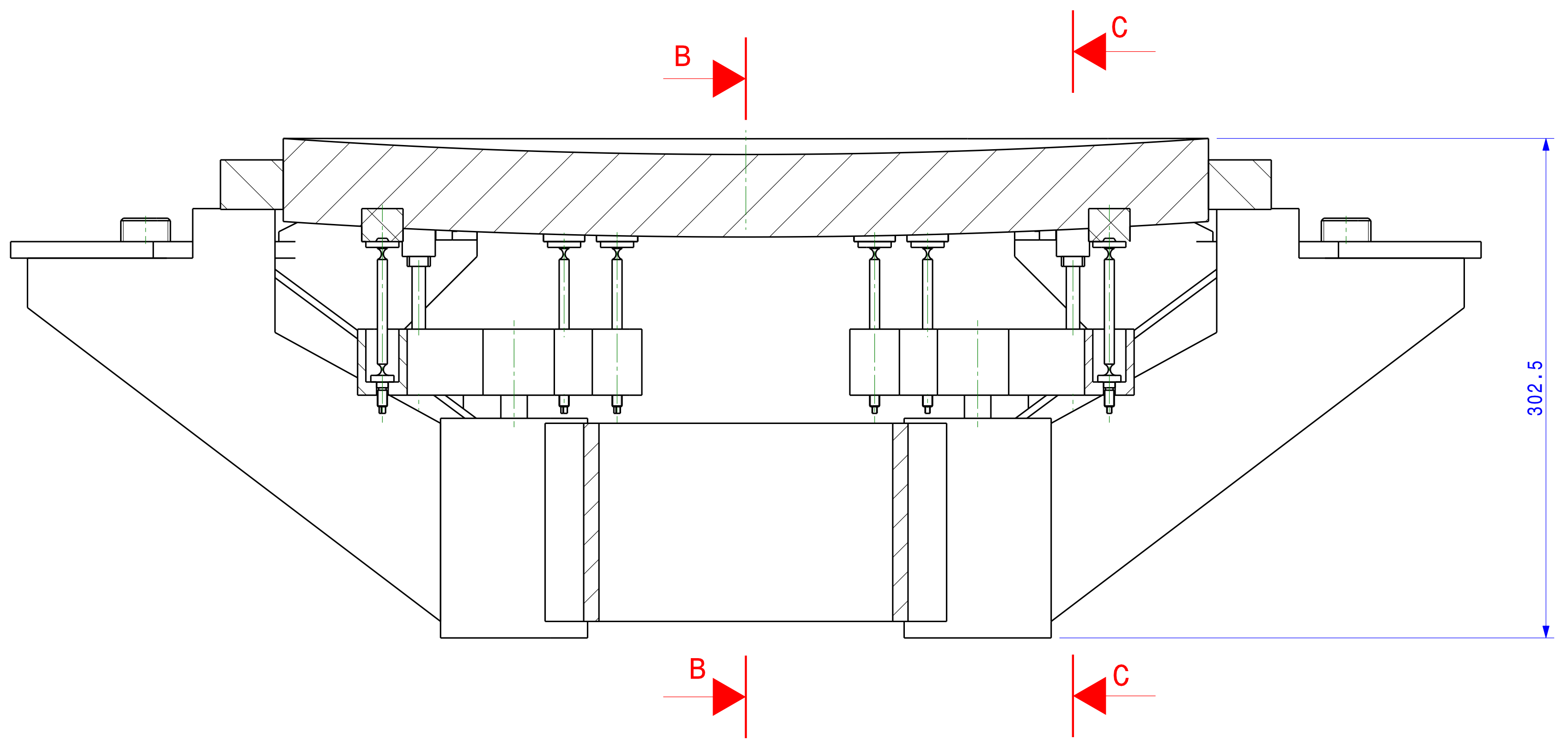

Section B-B
Scale : 2:5

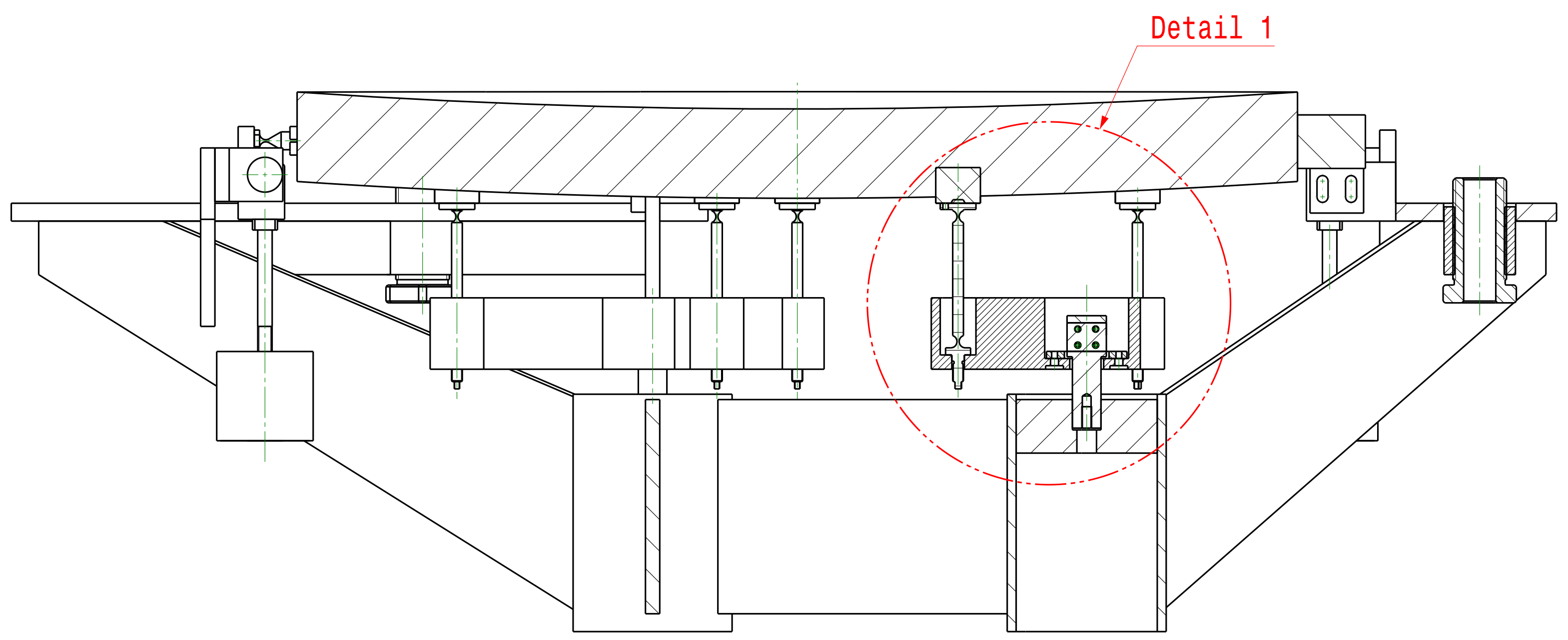

Detail 1
Scale : 1:1

Axial support system

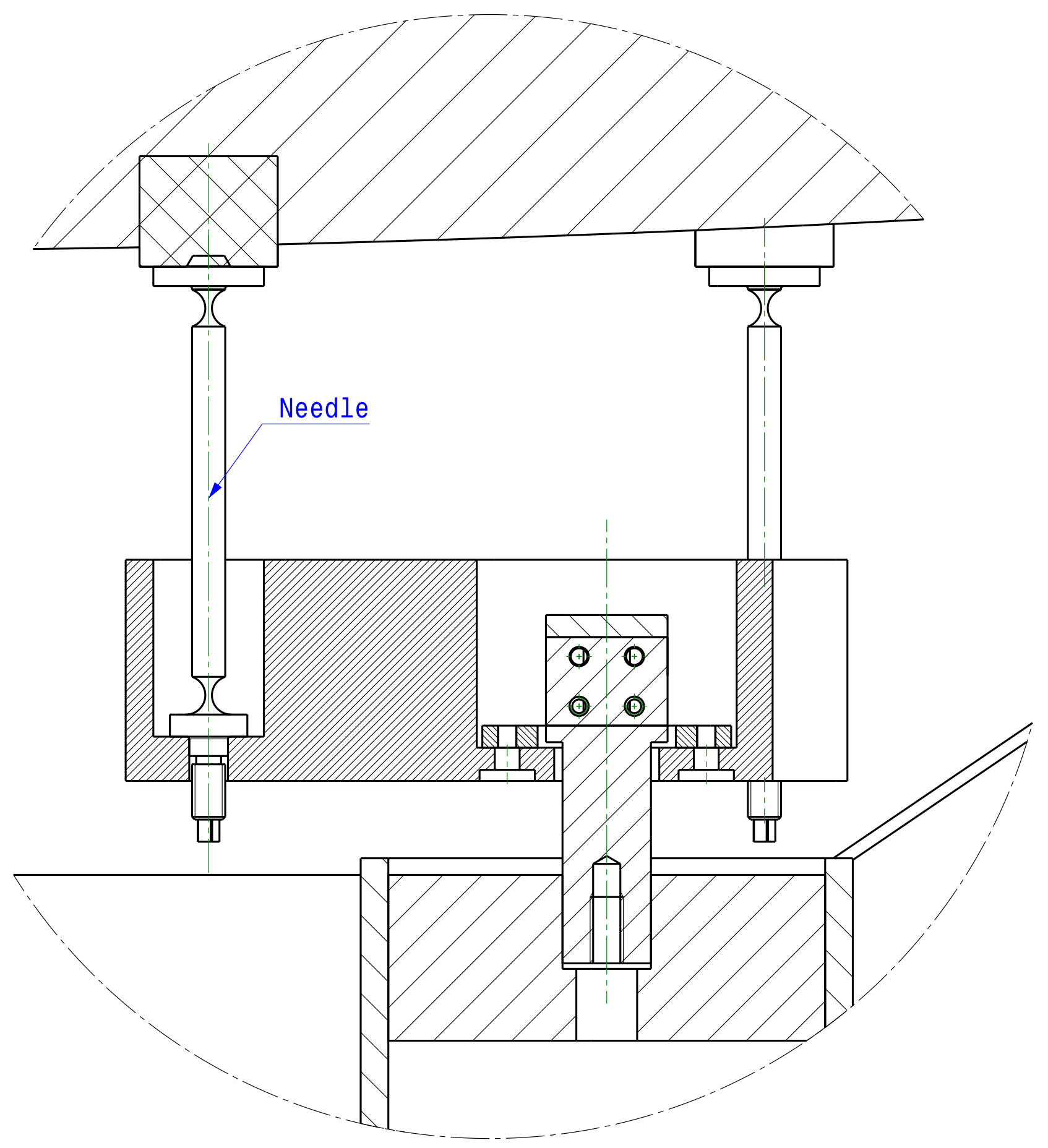

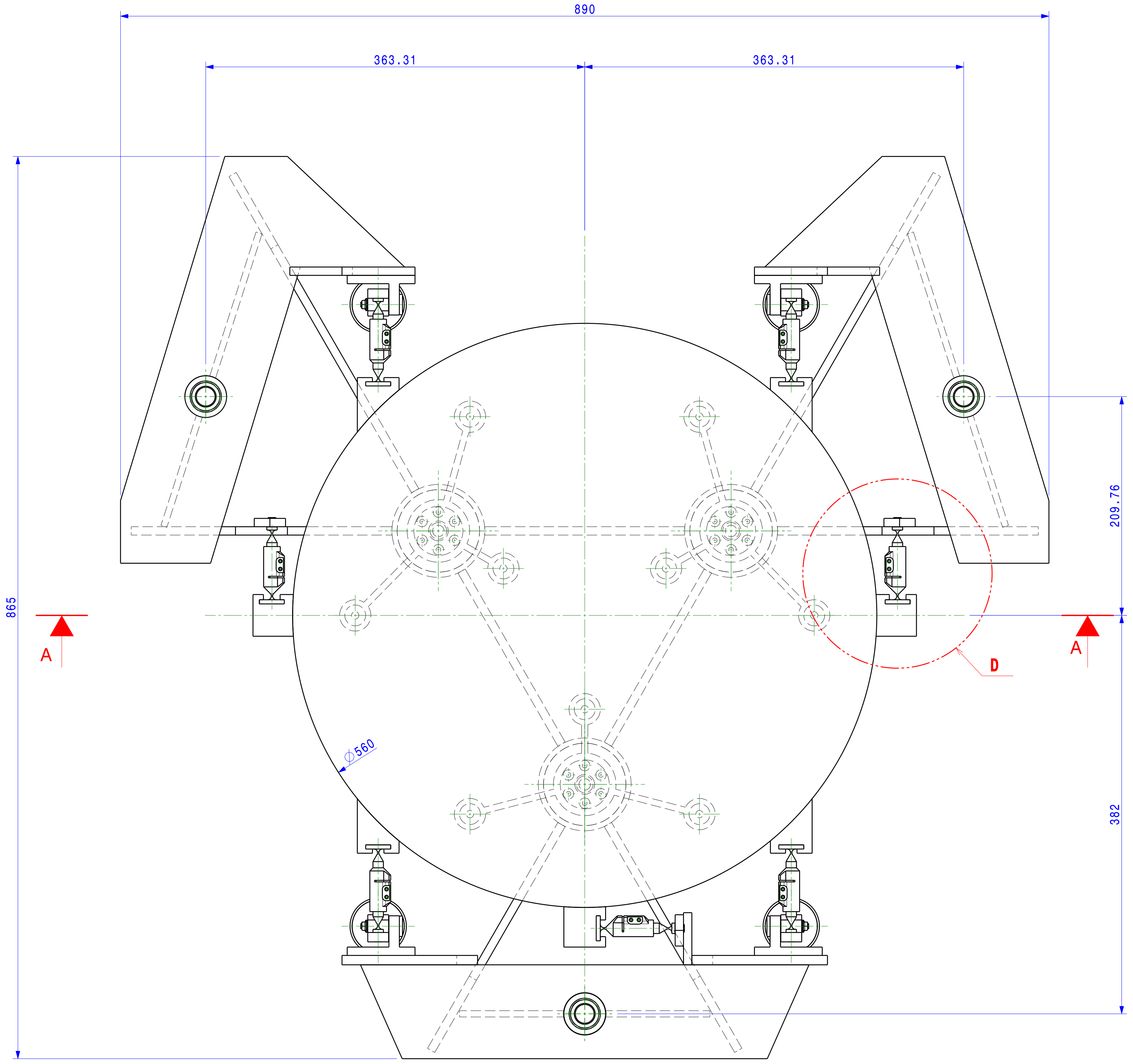

Section C-C
Scale : 1:1

Lateral support system

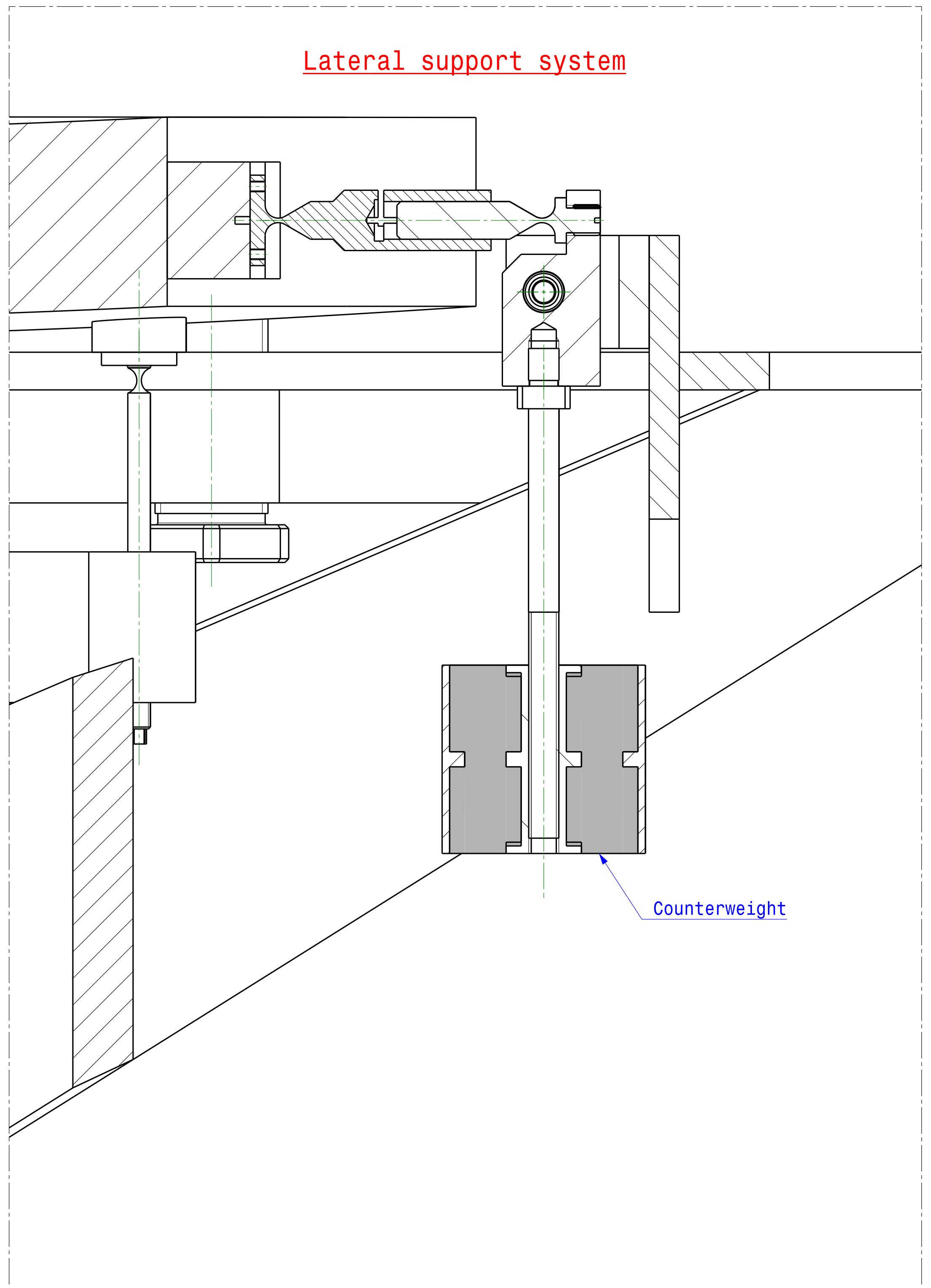

Isométric view
Scale : 1:5

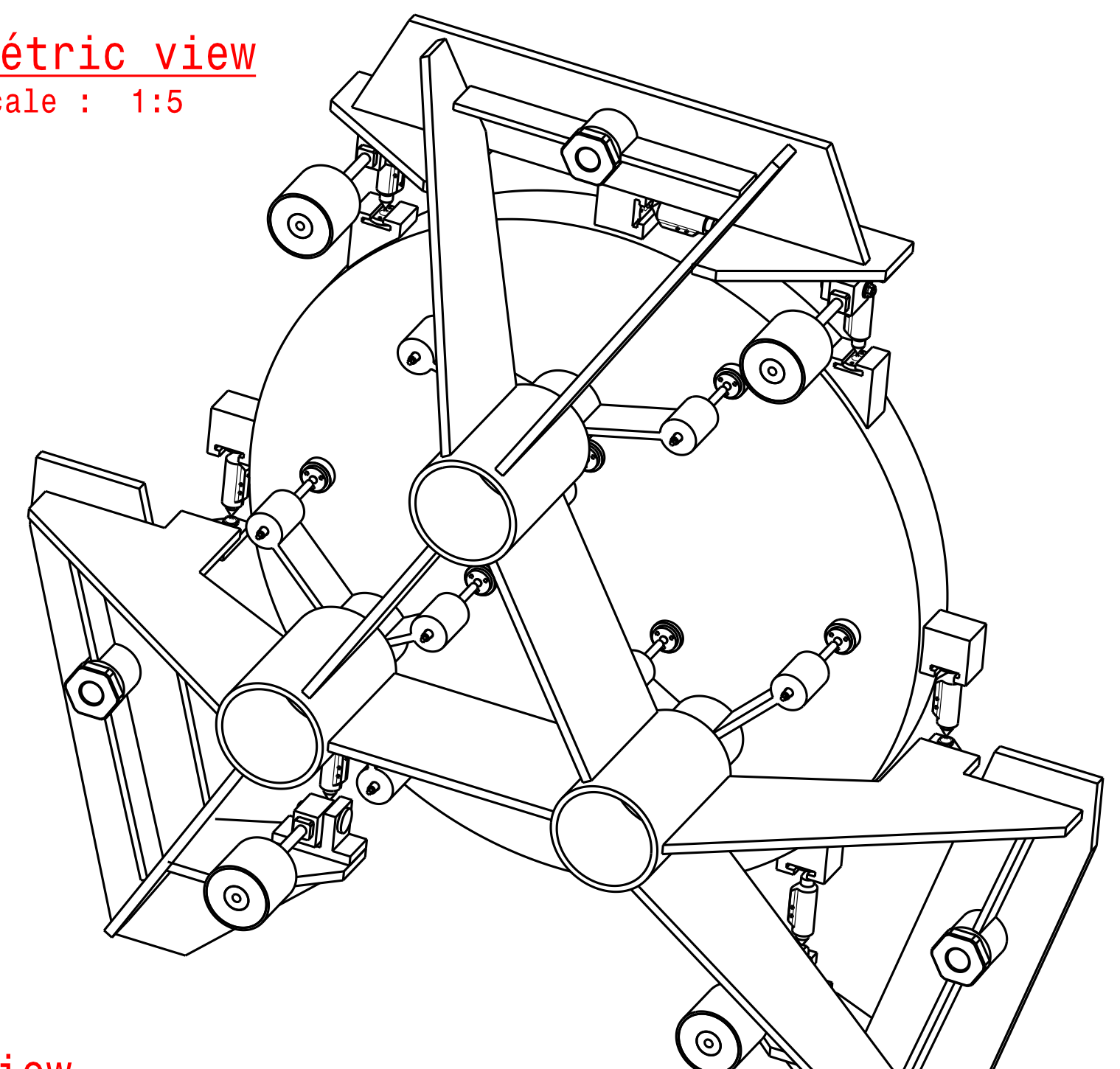

Isométric view
Scale : 1:5

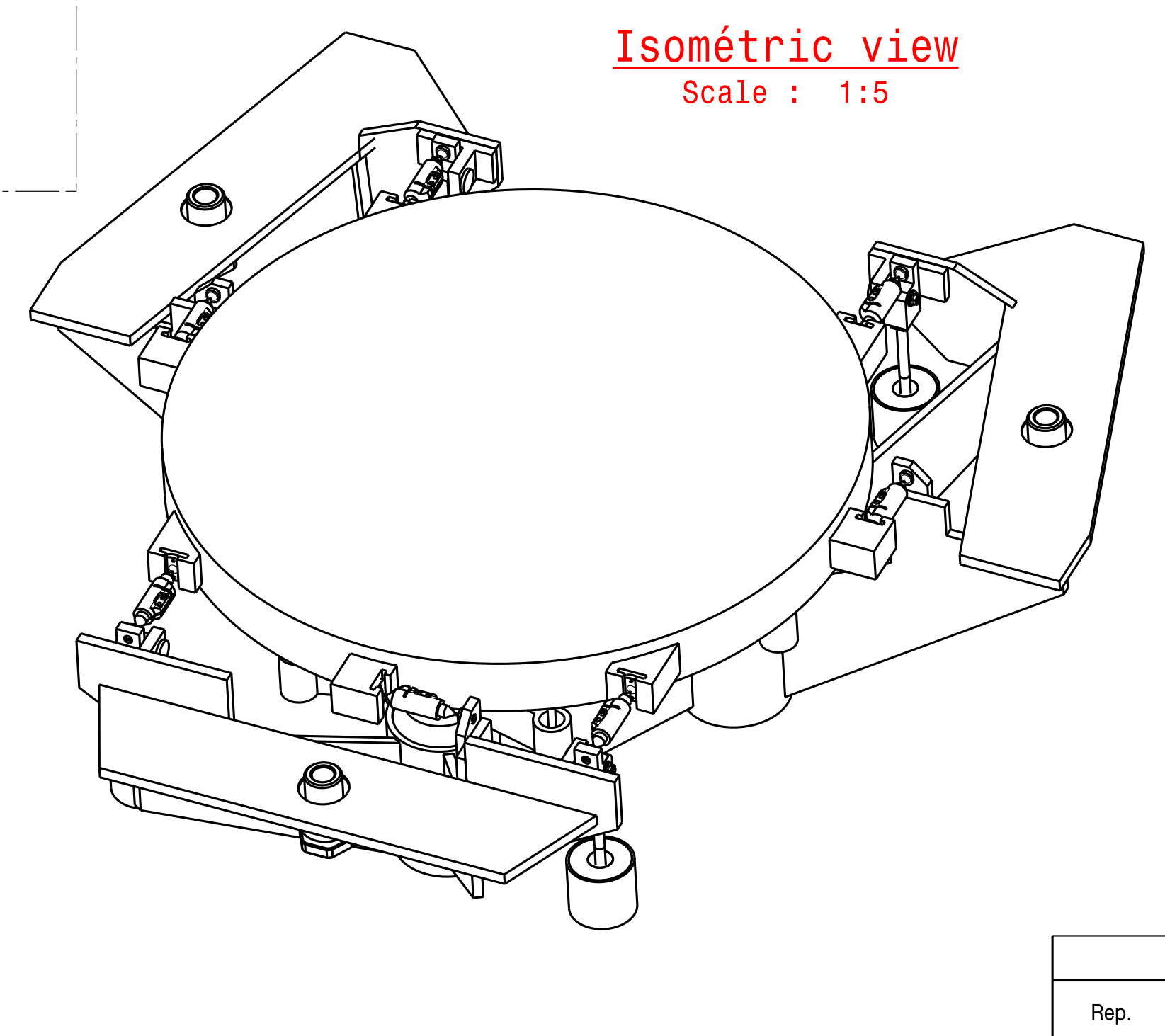

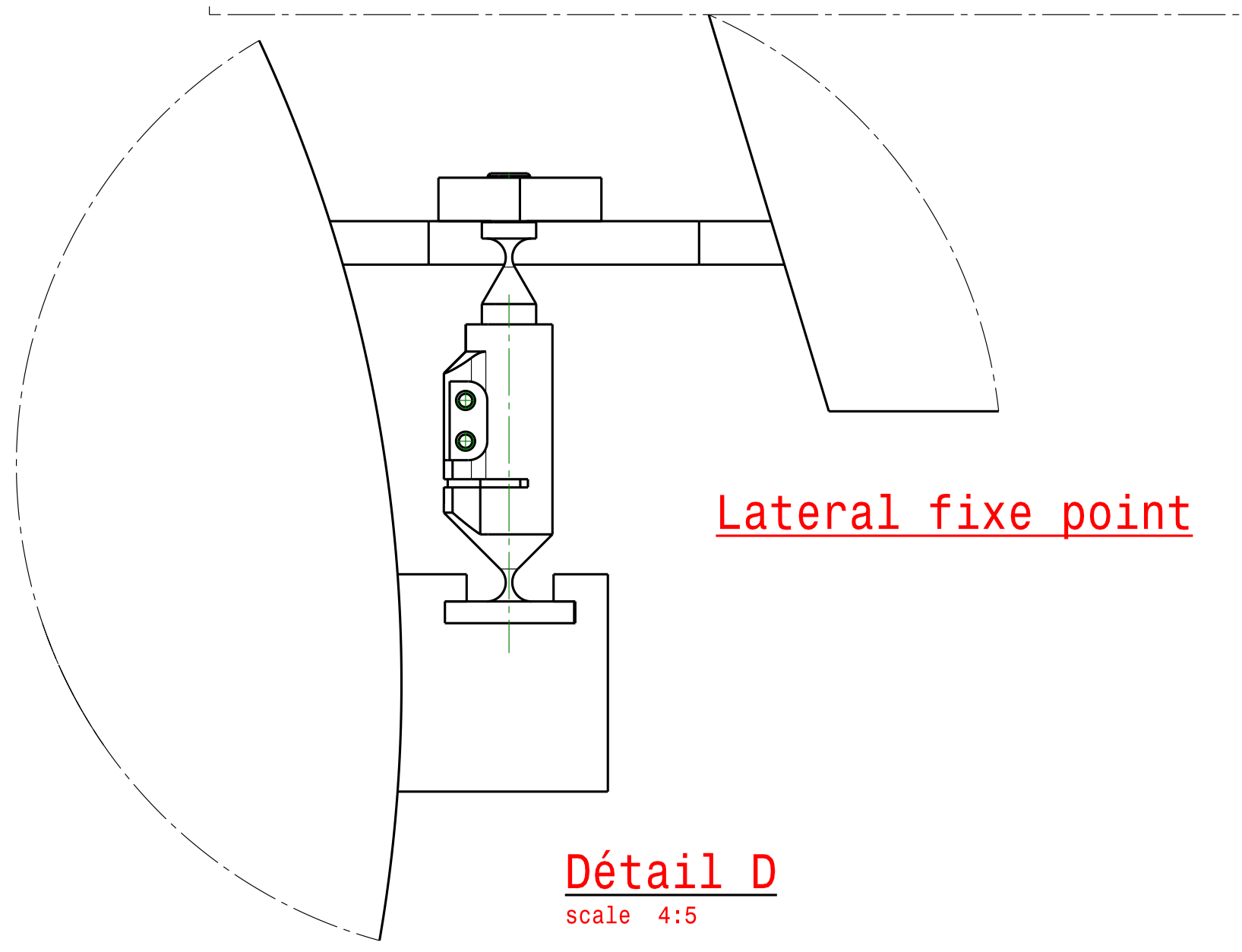

Lateral fixe point

Détail D
scale 4:5

Rep.	Nbr / Ens	Name	Drawing - Remarks - Material

AFL : Approved for Lay-out	CFA : Certified for Application	ASB : As-Built	FIN : Final - to be Archived

Document 02	Format A0	
Tolerances :	Machining	DIN 7168-f-R
	Welding	AE DIN 8570
	Date	Name
Drawn	02-07-2007	IBN
Checked	-	-

AMOS SA.
ADVANCED MECHANICAL AND OPTICAL SYSTEMS
Parc Scientifique du Sart-Tilman
rue des Chasseurs Ardennais
B-4031 ANGLEUR [BELGIUM]

Product Item
MAST
Solar telescope
M1 mirror , cell and support system
Assembly

Treatment : -
Mass.: - Kg.
-
-

Scale	Drawing	Sheet	Issue
2/5 ; 1/5 , 1/1	1967 - 11-00-00	1/1	A

Ref. CATIA R:\1967_MAST\1967_10_00_00_tube\1967_11_00_00 Orig.

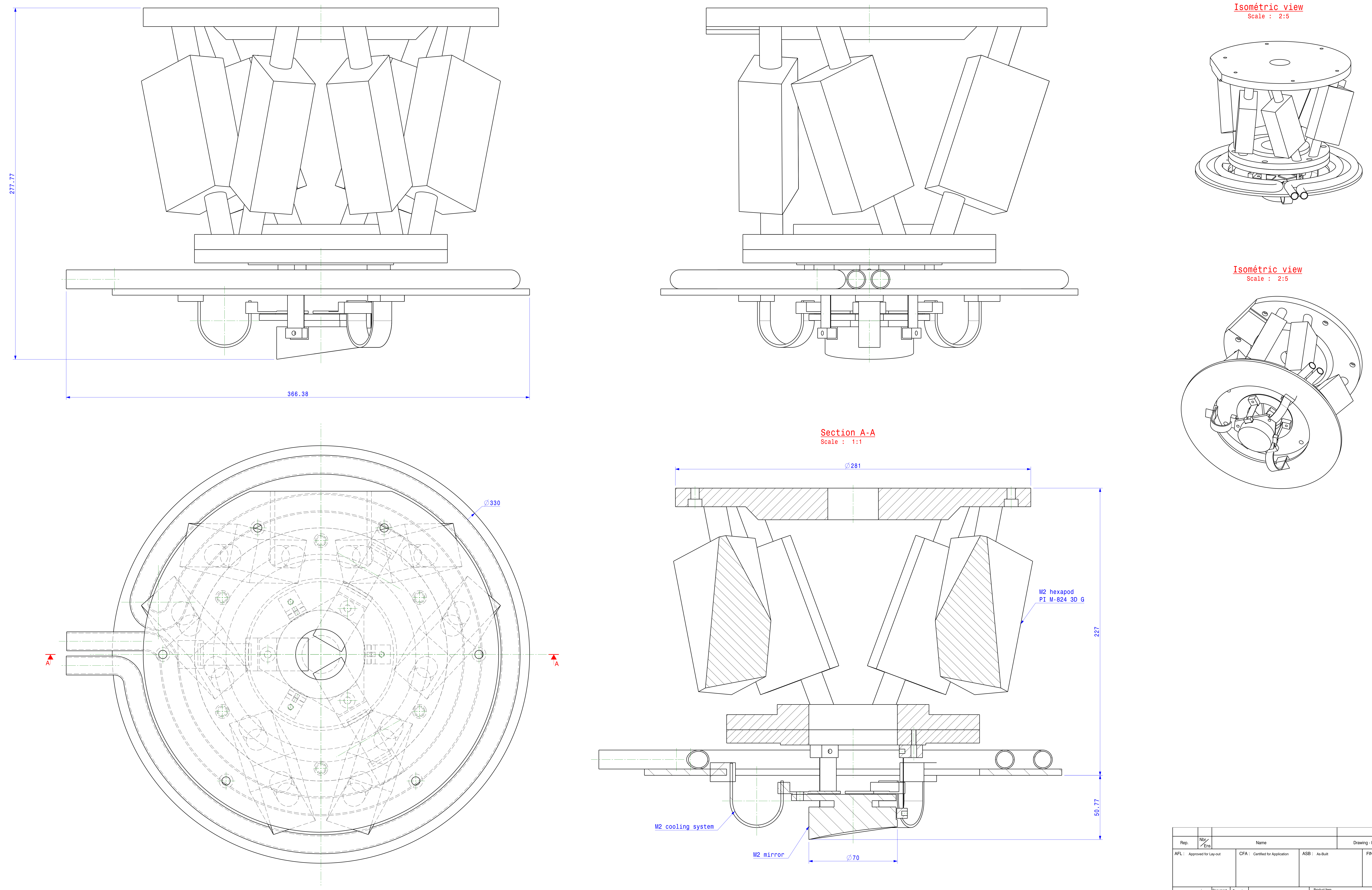

Rep.	Nbr/Ens	Name	Drawing - Remarks - Material

AFL : Approved for Lay-out
CFA : Certified for Application
ASB : As-Built
FIN : Final - to be Archived

Document 02
Format A0

Tolerances : Machining DIN 7168-f-R
Welding AE DIN 8570

	Date	Name
Drawn	03-07-2007	IBN
Checked	-	-

SA. AMOS
ADVANCED MECHANICAL AND OPTICAL SYSTEMS
Parc Scientifique du Sart-Tilman
rue des Chasseurs Ardennais
B-4031 ANGLEUR [BELGIUM]

Product Item
MAST
Solar telescope
M2 mirror, support and cooling system
Assembly

Treatment : -
Mass.: - Kg. -
-

Scale 1/1
Drawing 1967 - 13-00-00
Sheet 1/1
Issue A
Ref. CATIA R:\1967_MAST\1967_10_00_00_tube\1967_13_00_00
Orig.

A1

right view

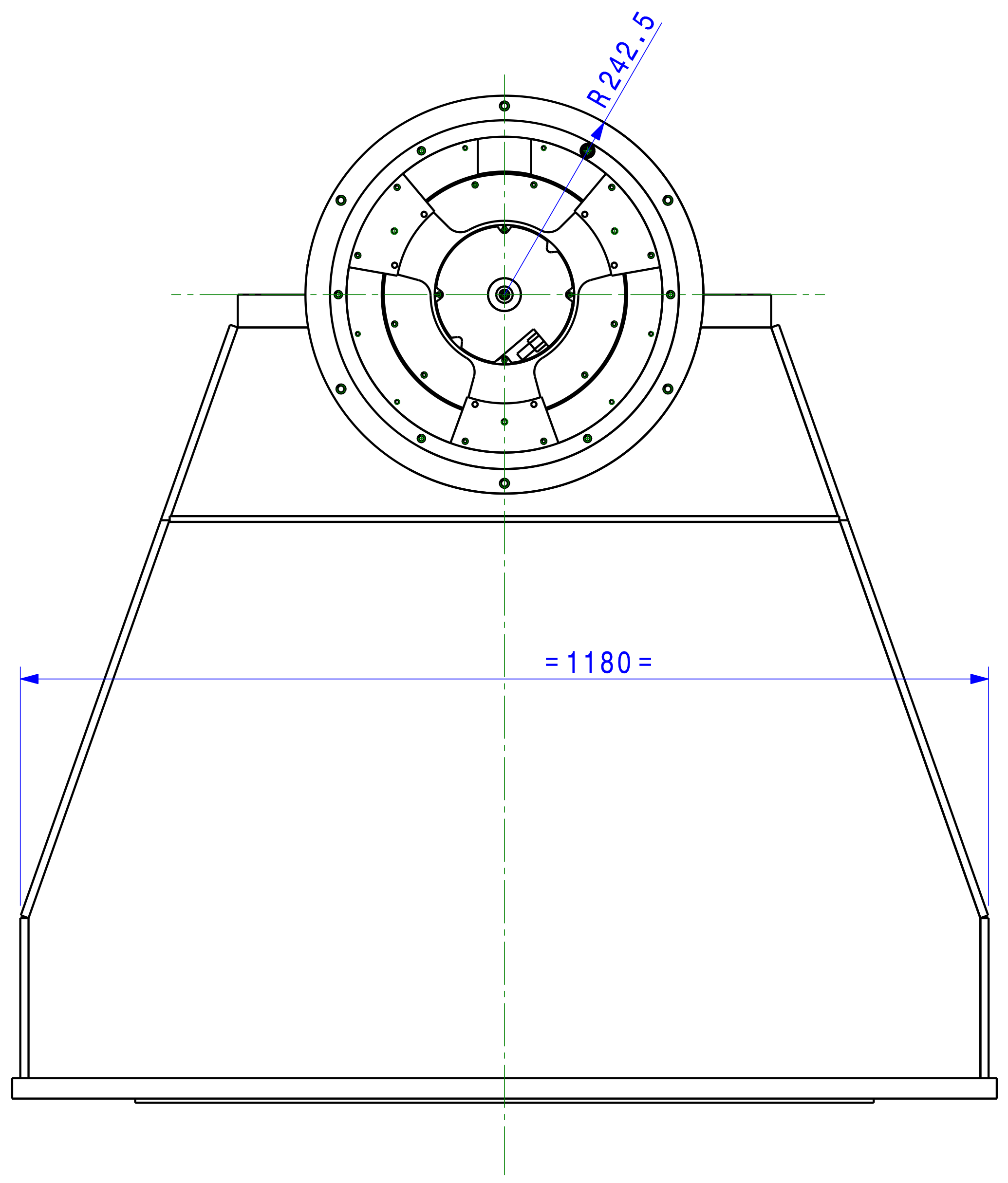

front view

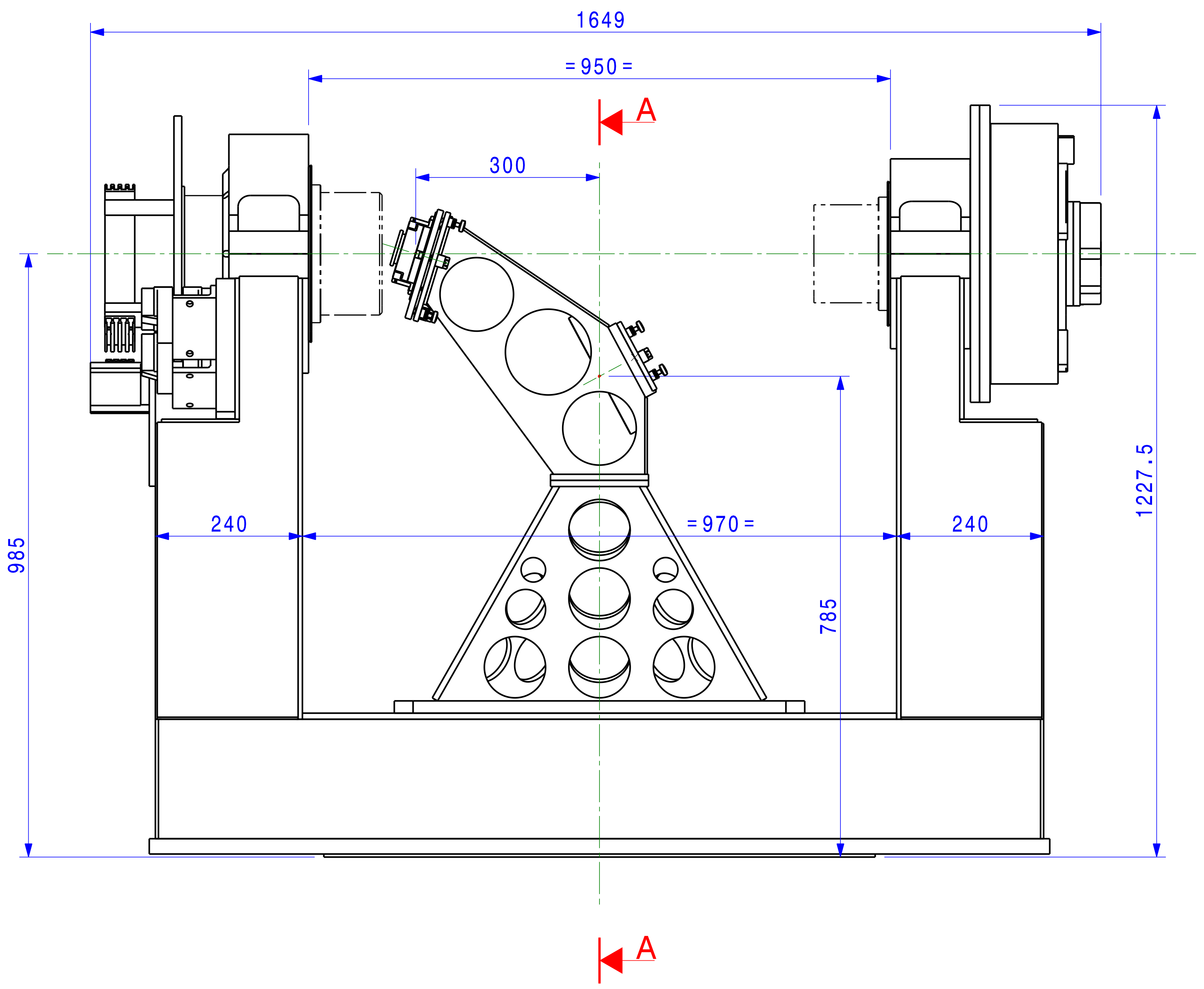

left view

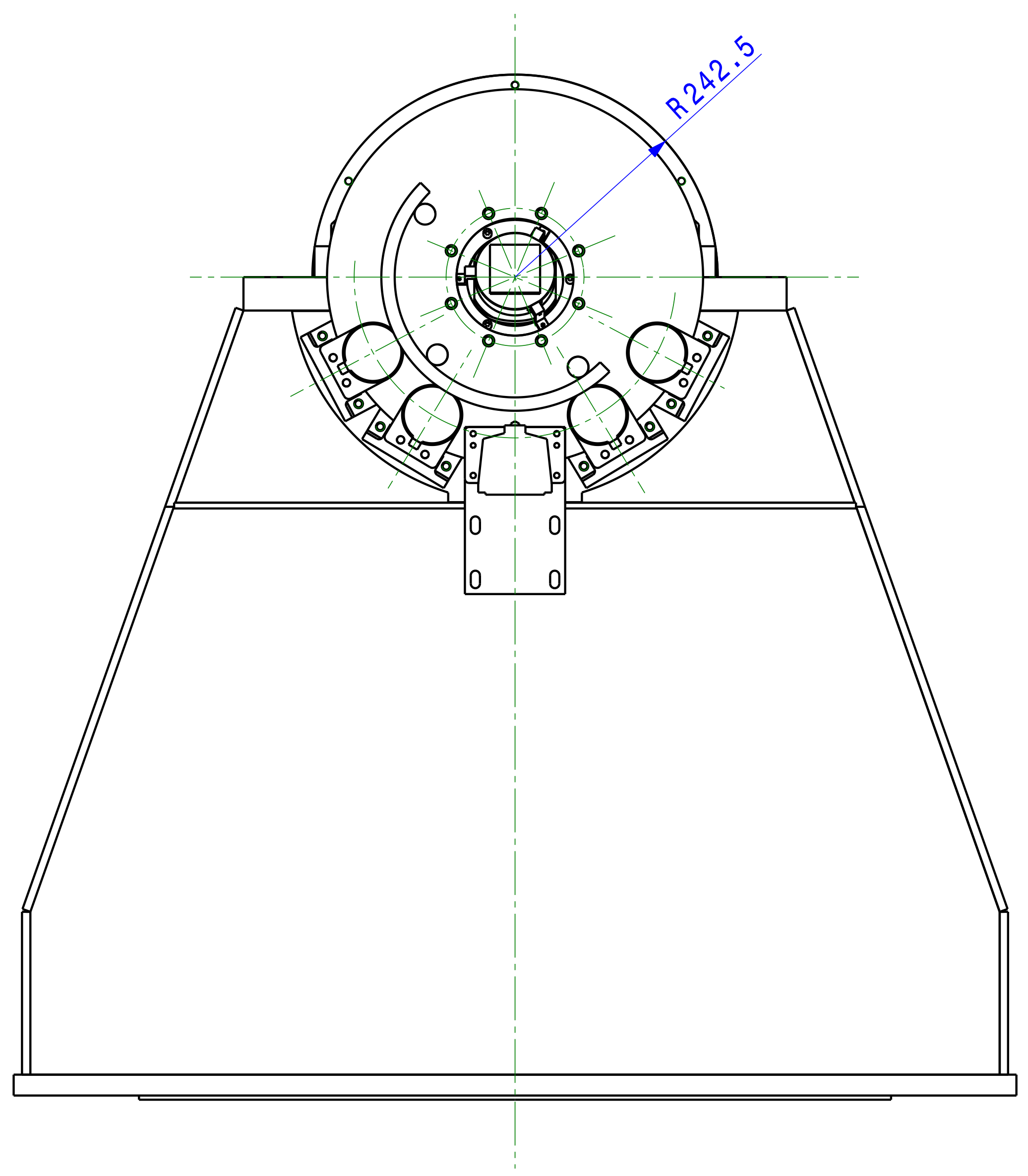

section A-A

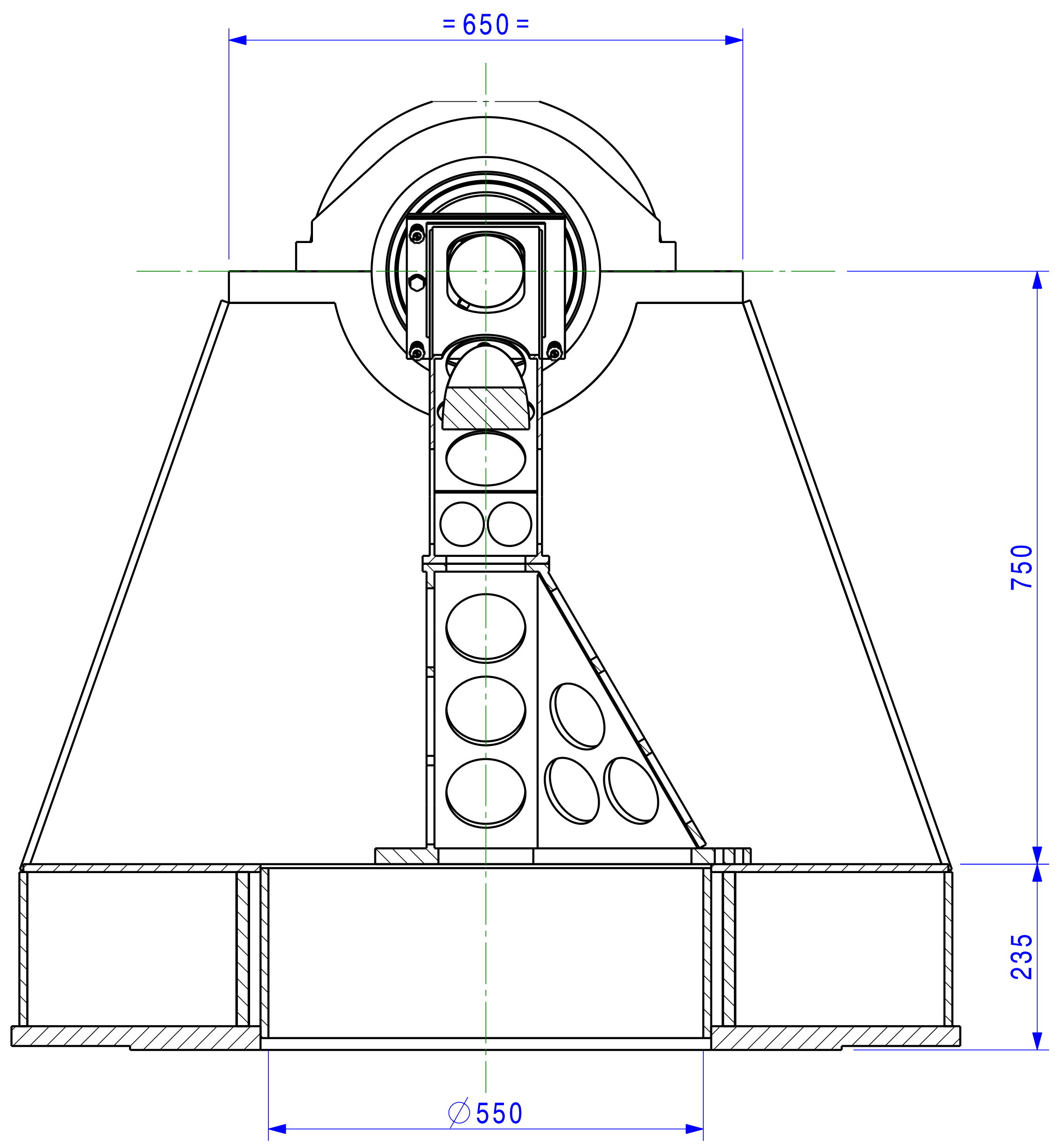

top view

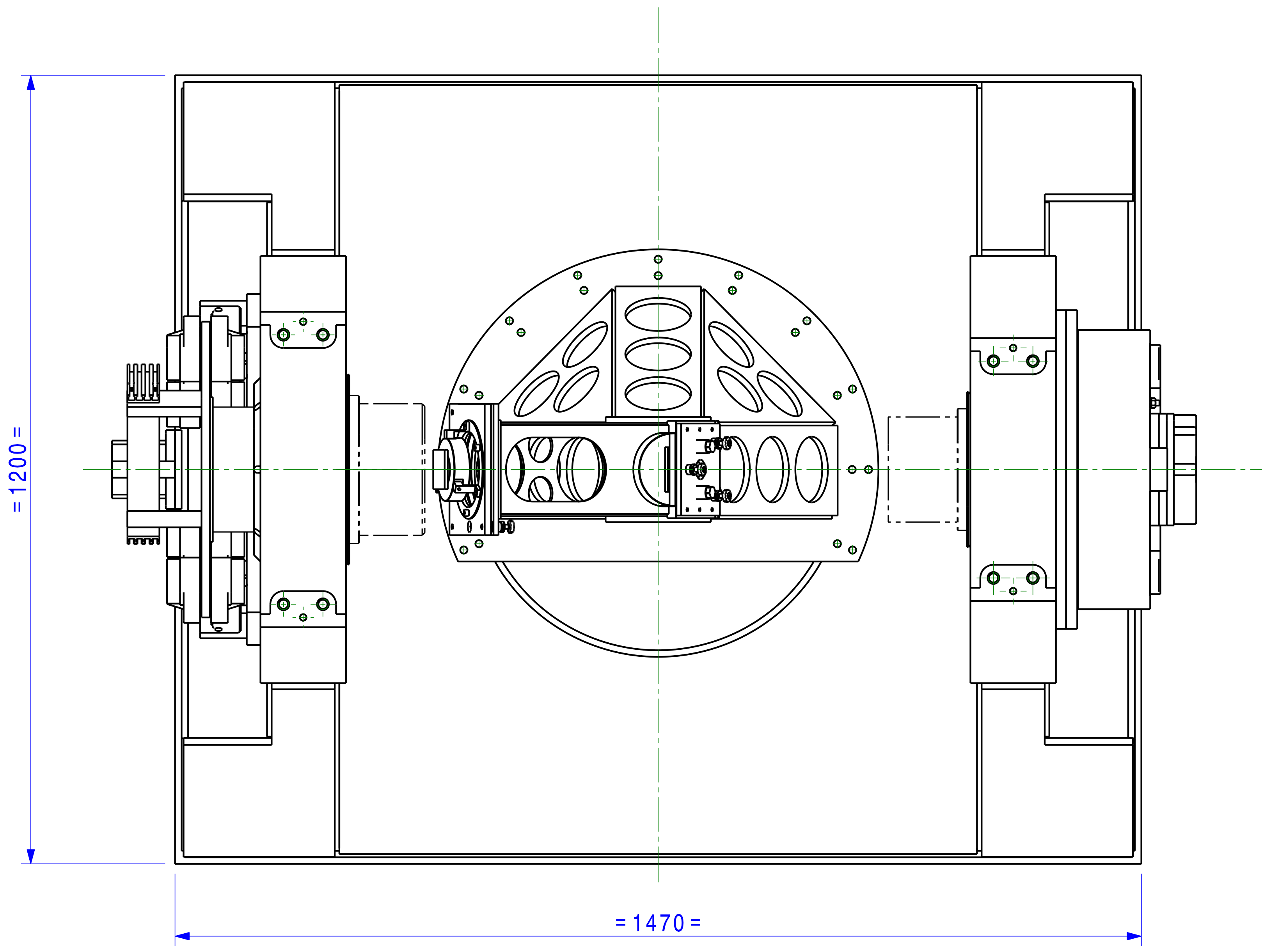

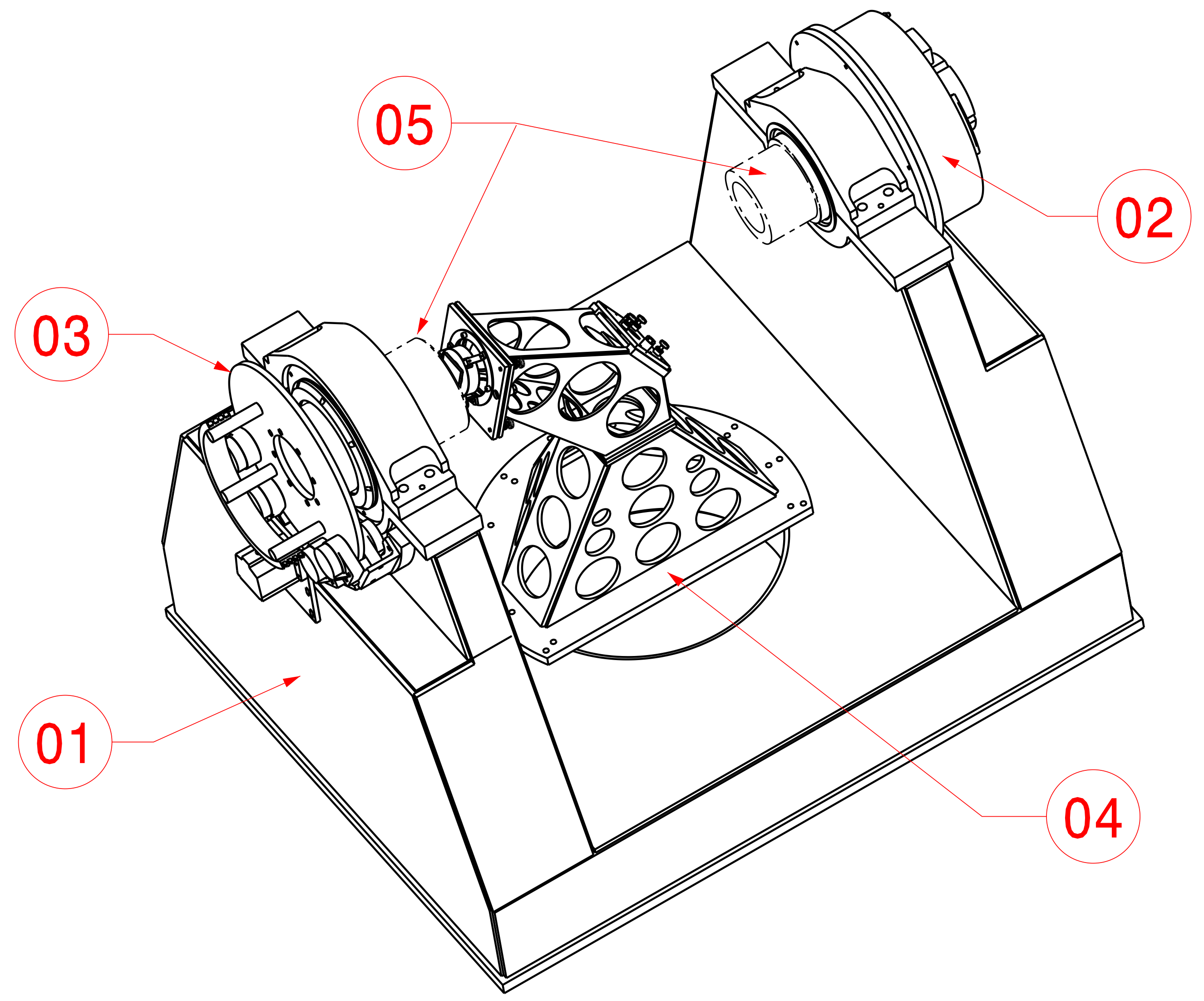

Rep.	Nbr/Ens	Name	Drawing - Remarks - Material
05	1	axis tube	Drawing 1967 - 12-00-00
04	1	coude train	Drawing 1967 - 23-00-00
03	1	altitude brake	Drawing 1967 - 21-20-00
02	1	altitude drive	Drawing 1967 - 21-10-00
01	1	fork	Drawing 1967 - 21-00-00
	1	Each assembly is composed of :	

AFL : Approved for Lay-out
CFA : Certified for Application
ASB : As-Built
FIN : Final - to be Archived

Treatment : -
Mass.: Kg. -
-

Document 02
Format A1
Tolerances : Machining DIN 7168-f-R
Welding AE DIN 8570

	Date	Name
Drawn	22-05-2007	AMN
Checked	-	-

SA. AMOS
ADVANCED MECHANICAL AND OPTICAL SYSTEMS
Parc Scientifique du Sart-Tilman
rue des Chasseurs Ardennais
B-4031 ANGLEUR [BELGIUM]

Product Item
MAST
Solar telescope
Fork
General assembly

Scale 1/7.5
Drawing 1967 - 20-00-00
Sheet 1/1
Issue A
Ref. CATIA R:\1967_MAST\1967_20_00_00_fork\1967_20_00_00_A
Orig.

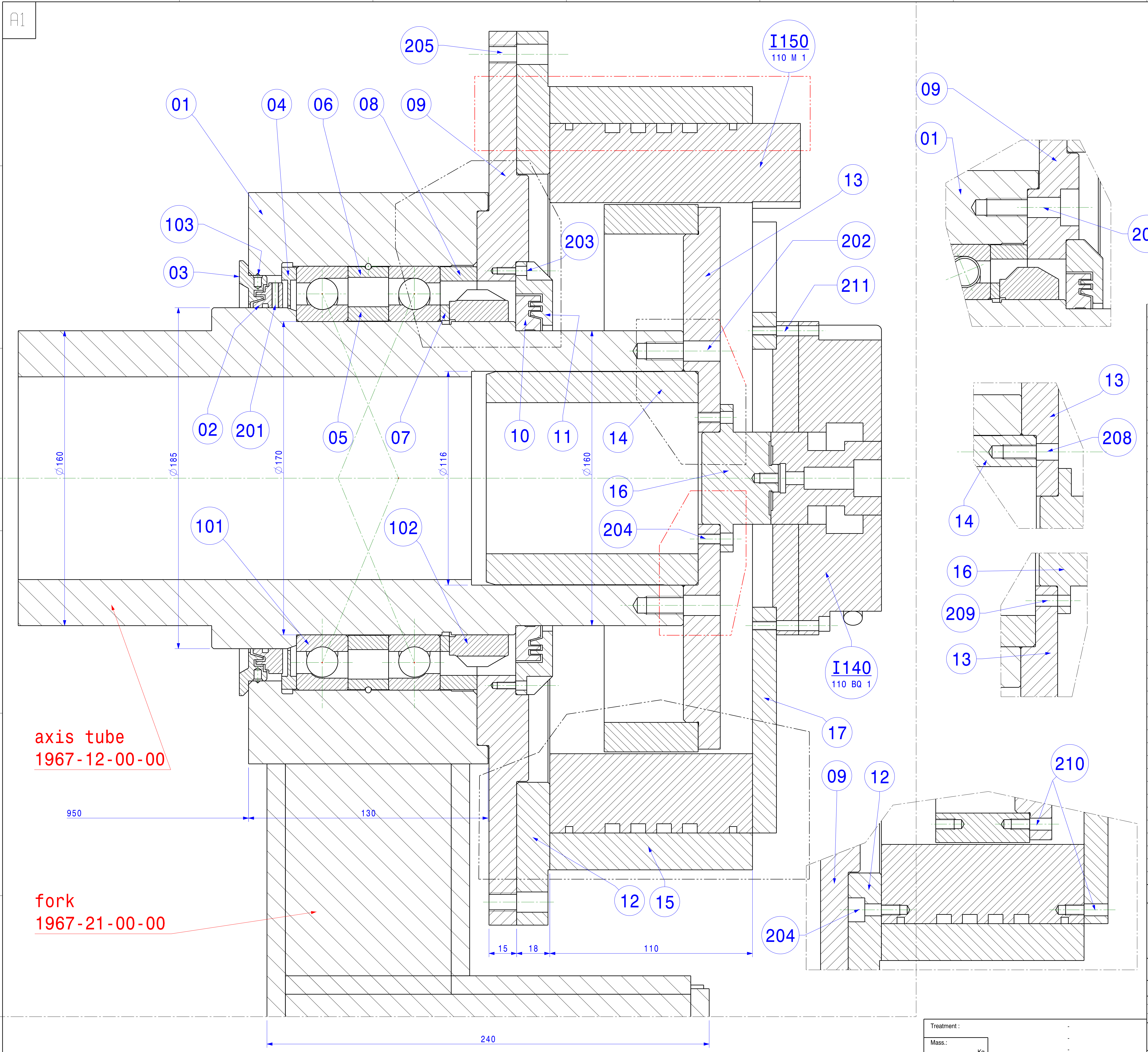

Treatment : -

Mass.: - Kg. -

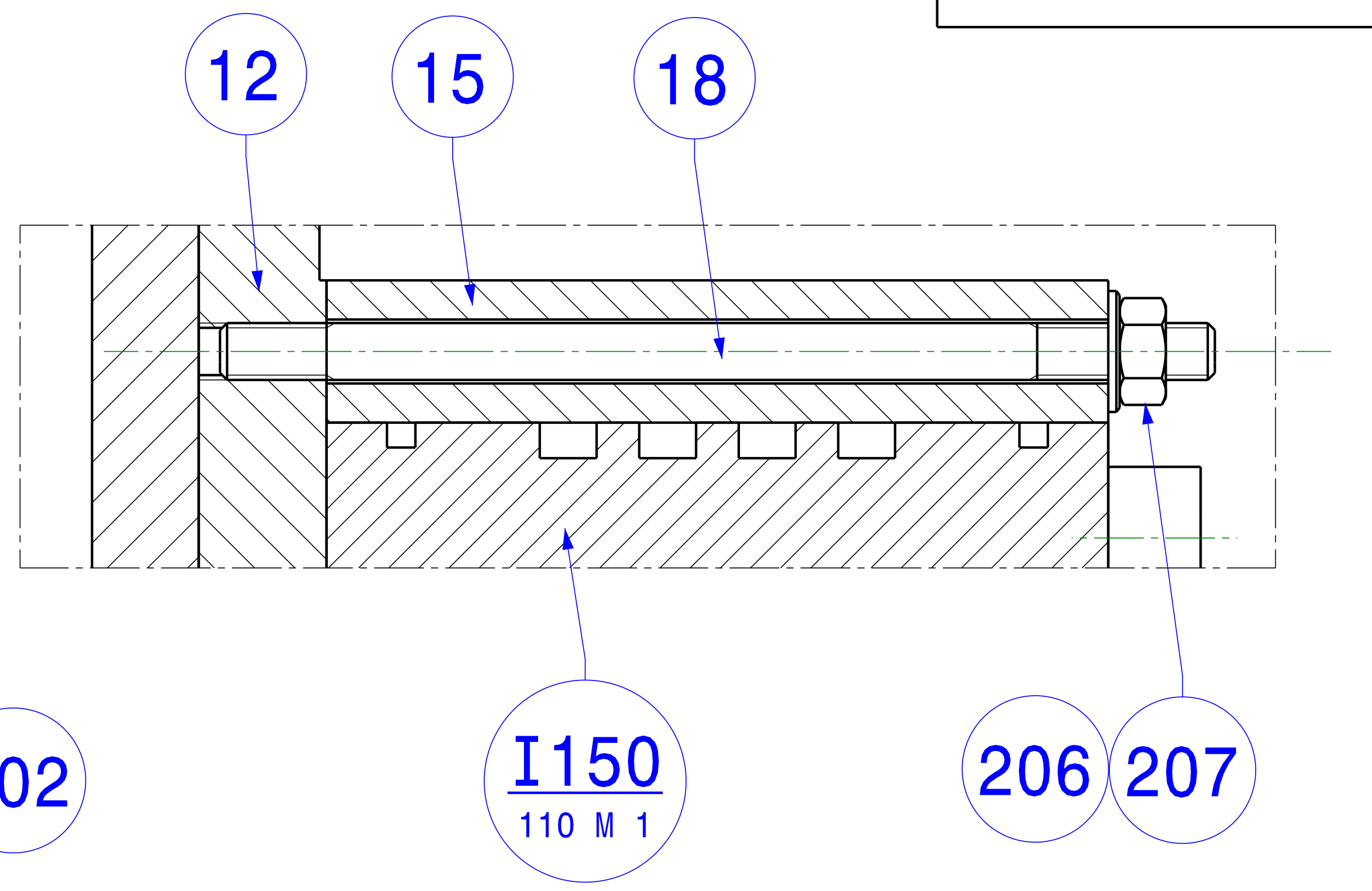

I_150	1	brushless motor TMB 0360-050	ETEL
I_140	1	encoder RON 905	HEIDENHAIN
211	4	DIN 912 M 5 x 35 screw	8.8
210	18	DIN 912 M 6 x 20 screw	8.8
209	1	DIN 7 Ø 6 x 18 parallel pin	steel
208	6	DIN 912 M 8 x 25 screw	8.8
207	6	DIN 125 M 8 washer	steel
206	6	DIN 934 M 8 nut	cl.8
205	6	DIN 912 M 10 x 30 screw	8.8
204	16	DIN 912 M 6 x 16 screw	8.8
203	8	DIN 912 M 4 x 12 screw	8.8
202	14	DIN 912 M 10 x 35 screw	8.8
201	3	DIN 915 M 4 x 12 screw	8.8
103	6	trigger ref. H.2208.004	SCHILTZ
102	1	nut ref. KMT34 M 170x3	SKF
101	2	bearing ref. 71934 ACD/P4ADFA	SKF
18	6	screwed rod	1967 - 21-10-18
17	1	flange support encoder	1967 - 21-10-17
16	1	encoder centering axis	1967 - 21-10-16
15	1	cooling motor	1967 - 21-10-15
14	1	motor centering axis	1967 - 21-10-14
13	1	flange support motor	1967 - 21-10-13
12	1	flange support motor	1967 - 21-10-12
11	1	external labyrinth 4	1967 - 21-10-11
10	1	internal labyrinth 3	1967 - 21-10-10
09	1	flange support	1967 - 21-10-09
08	1	brace 5	1967 - 21-10-08
07	1	brace 4	1967 - 21-10-07
06	1	brace 3	1967 - 21-10-06
05	1	brace 2	1967 - 21-10-05
04	1	brace 1	1967 - 21-10-04
03	1	external labyrinth 2	1967 - 21-10-03
02	1	internal labyrinth 1	1967 - 21-10-02
01	1	bearing half shell	1967 - 21-10-01
Rep.	Nbr/Ens	Name	Drawing - Remarks - Material

AFL : Approved for Lay-out	CFA : Certified for Application	ASB : As-Built	FIN : Final - to be Archived

Document 02
Format A1

Tolerances : Machining DIN 7168-f-R
Welding AE DIN 8570

	Date	Name
Drawn	31-05-2007	-
Checked	-	-

SA. AMOS
ADVANCED MECHANICAL AND OPTICAL SYSTEMS
Parc Scientifique du Sart-Tilman
rue des Chasseurs Ardennais
B-4031 ANGLEUR [BELGIUM]

Product Item
MAST
Solar telescope
altitude drive
Assembly

Scale 1/1
Drawing 1967 - 21-10-00
Sheet 1/1
Issue A

Ref. CATIA R:\1967_MAST\1967_20_00_00_fork\1967_21_10_00_A
Orig.

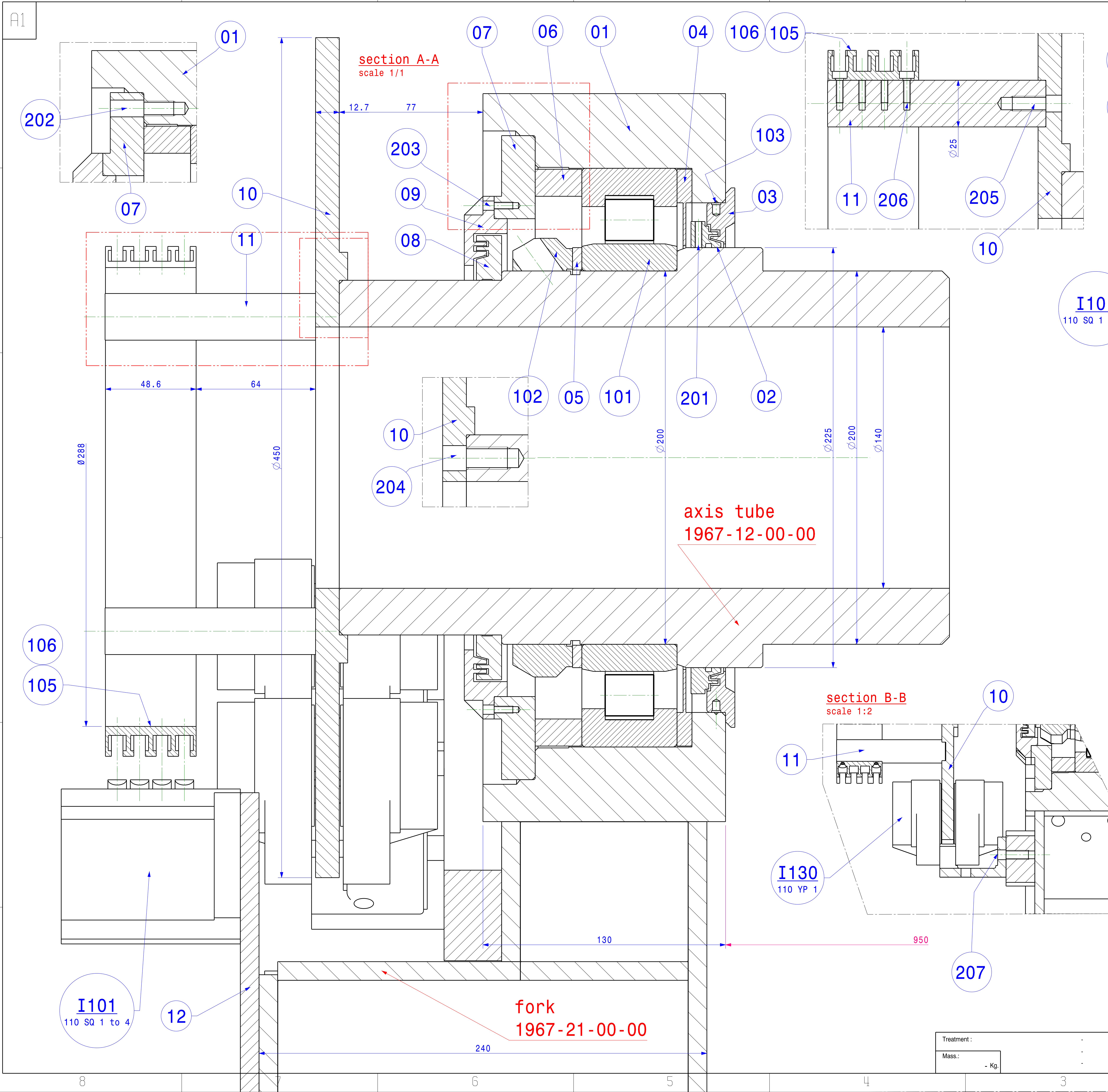

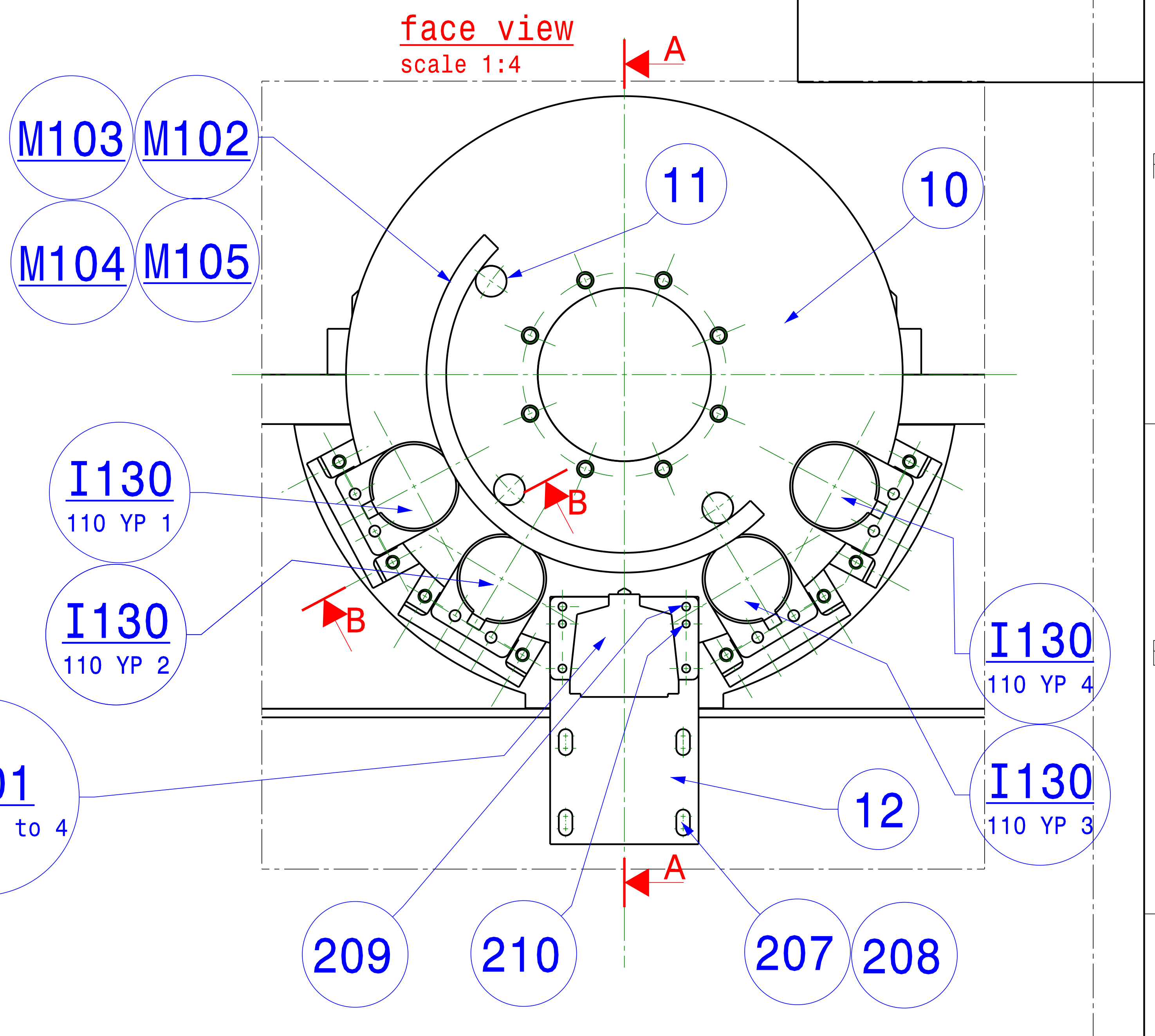

Rep.	Nbr/Ens	Name	Drawing - Remarks - Material
M_105	1	rotary cam trip 3° type BNN-TR-003-160-12	BALLUFF
M_104	2	rotary cam trip 2° type BNN-TR-002-160-12	BALLUFF
M_103	2	rotary cam trip 1° type BNN-TR-001-160-12	BALLUFF
M_102	1	rotary cam tray type BNI-LAH-1204-160-B	BALLUFF
I_130	4	pneumatic brake #1 to #4 type TBN	COREMO OCMEA ASSAGO
I_101	1	multiple limit switch BNS 819-D04-D12-100-10	BALLUFF
210	2	DIN 7 Ø 6 x 24 parallel pin	steel
209	4	DIN 912 M 6 x 25 screw	8.8
208	4	DIN 125 M 10 washer	steel
207	12	DIN 912 M 10 x 25 screw	8.8
206	6	DIN 912 M 4 x 10 screw	8.8
205	3	DIN 912 M 8 x 20 screw	8.8
204	8	DIN 912 M 12 x 30 screw	8.8
203	8	DIN 912 M 4 x 12 screw	8.8
202	8	DIN 912 M 8 x 30 screw	8.8
201	3	DIN 915 M 4 x 12 screw	8.8
103	6	trigger ref. H.2208.004	SCHILTZ
102	1	nut ref. KMT40 M 200x3	SKF
101	1	bearing ref. NU 1040 MA	SKF
12	1	multiple limit switch support	1967 - 21-20-12
11	3	rotary tray cam support	1967 - 21-20-11
10	1	brake disk	1967 - 21-20-10
09	1	external labyrinth 4	1967 - 21-20-09
08	1	internal labyrinth 3	1967 - 21-20-08
07	1	flange support	1967 - 21-20-07
06	1	brace 3	1967 - 21-20-06
05	1	brace 2	1967 - 21-20-05
04	1	brace 1	1967 - 21-20-04
03	1	external labyrinth 2	1967 - 21-20-03
02	1	internal labyrinth 1	1967 - 21-20-02
01	1	bearing half shell	1967 - 21-20-01

AFL : Approved for Lay-out
CFA : Certified for Application
ASB : As-Built
FIN : Final - to be Archived

Treatment : -
Mass.: - Kg. -
-

Document	Format
02	A1

Tolerances : Machining DIN 7168-f-R
Welding AE DIN 8570

	Date	Name
Drawn	31-05-2007	-
Checked	-	-

SA. AMOS
ADVANCED MECHANICAL AND OPTICAL SYSTEMS
Parc Scientifique du Sart-Tilman
rue des Chasseurs Ardennais
B-4031 ANGLEUR [BELGIUM]

Product Item
MAST
Solar telescope
altitude brake
Assembly

Scale 1/1
Drawing 1967 - 21-20-00
Sheet 1/1
Issue A
Ref. CATIA R:\1967_MAST\1967_20_00_00_fork\1967_21_20_00_A
Orig.

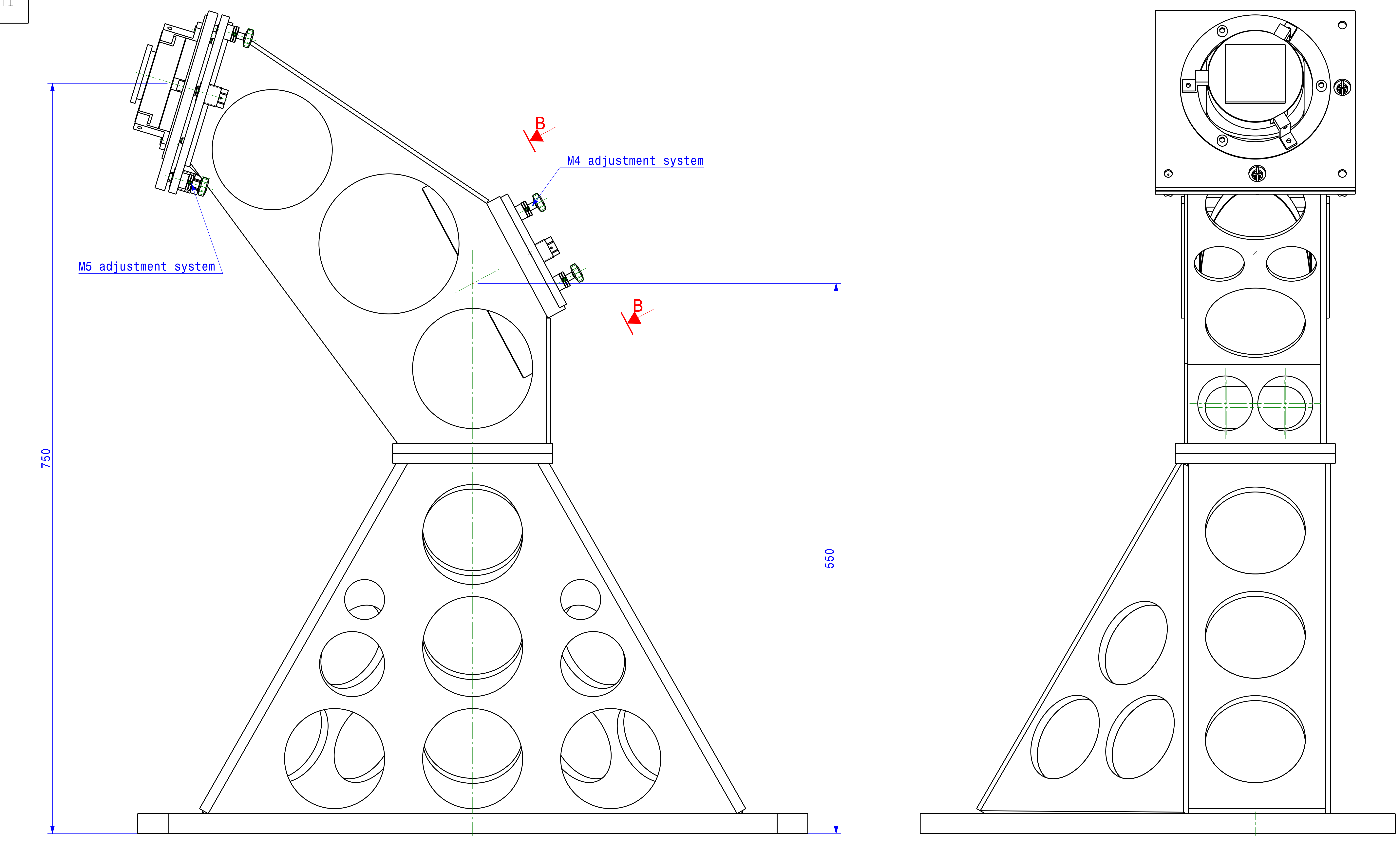

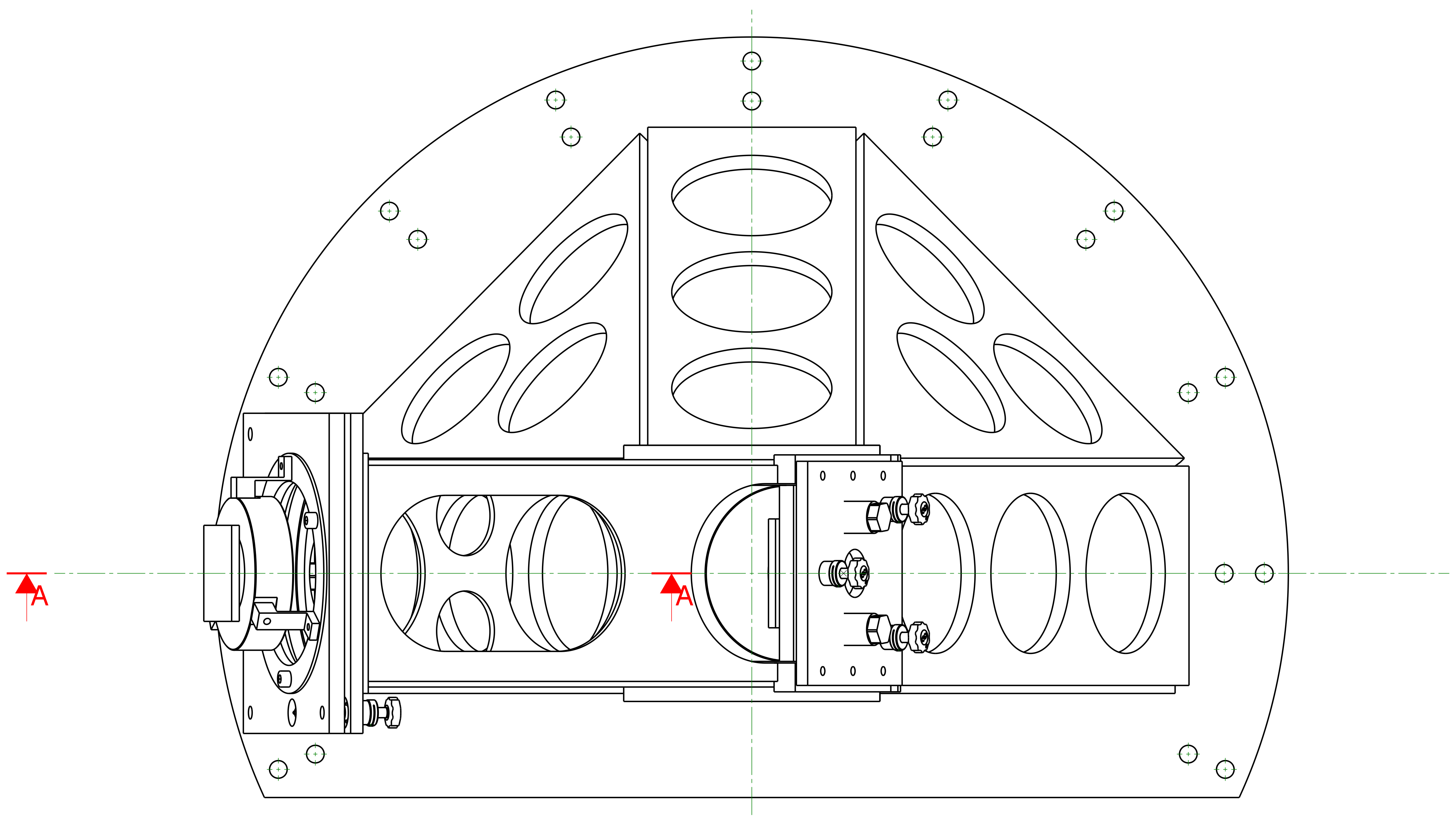

Coupe B-B
Echelle : 2:5

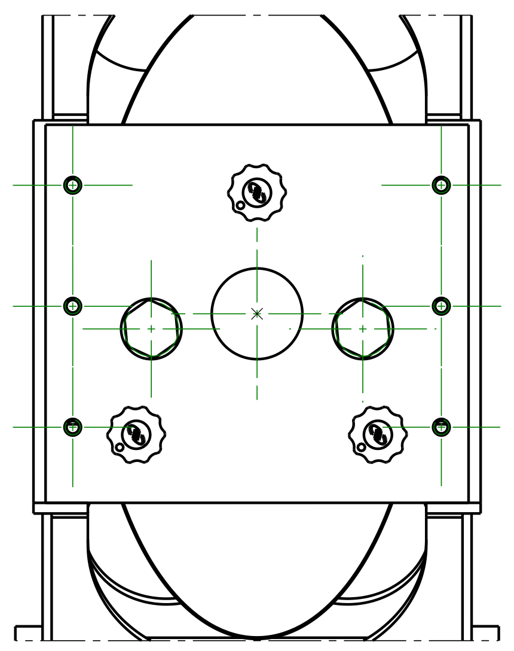

Isometric view
Scale : 2:7

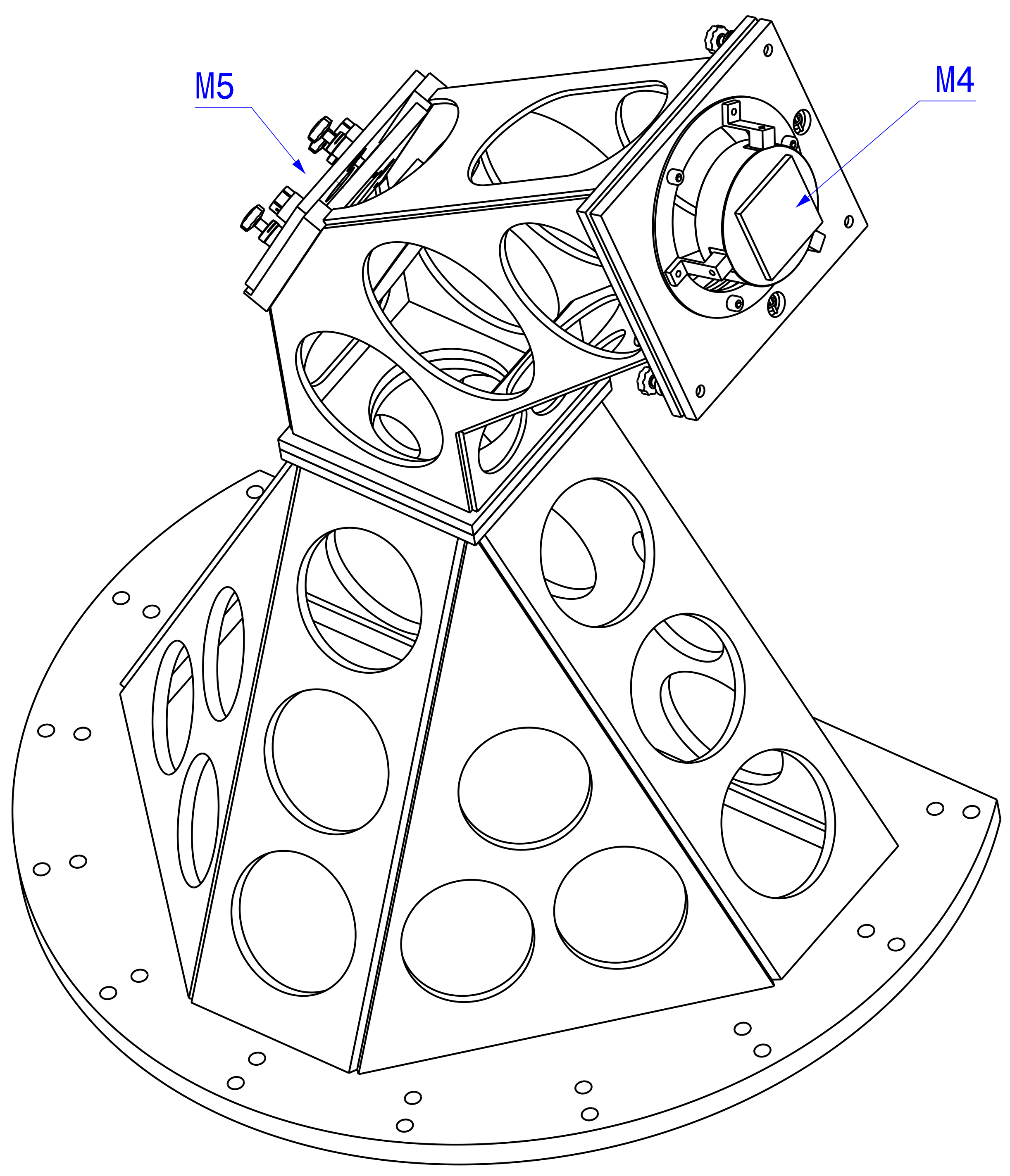

Rep.	Nbr/Ens	Name	Drawing - Remarks - Material

AFL : Approved for Lay-out
CFA : Certified for Application
ASB : As-Built
FIN : Final - to be Archived

Document 02
Format A1

Tolerances : Machining DIN 7168-f-R
Welding AE DIN 8570

	Date	Name
Drawn	11-07-2007	-
Checked	-	-

SA. AMOS
ADVANCED MECHANICAL AND OPTICAL SYSTEMS
Parc Scientifique du Sart-Tilman
rue des Chasseurs Ardennais
B-4031 ANGLEUR [BELGIUM]

Product Item
MAST
Solar telescope
Coude train
Assembly

Treatment : -
Mass.: - Kg.
-
-

Scale 2/5 ; 2/7
Drawing 1967 - 23-00-00
Sheet 1/1
Issue A

Ref. CATIA R:\1967_MAST\1967_23_00_00_coude\1967_23_00_00_coude_assy
Orig.

Section A-A
Sale : 1:8

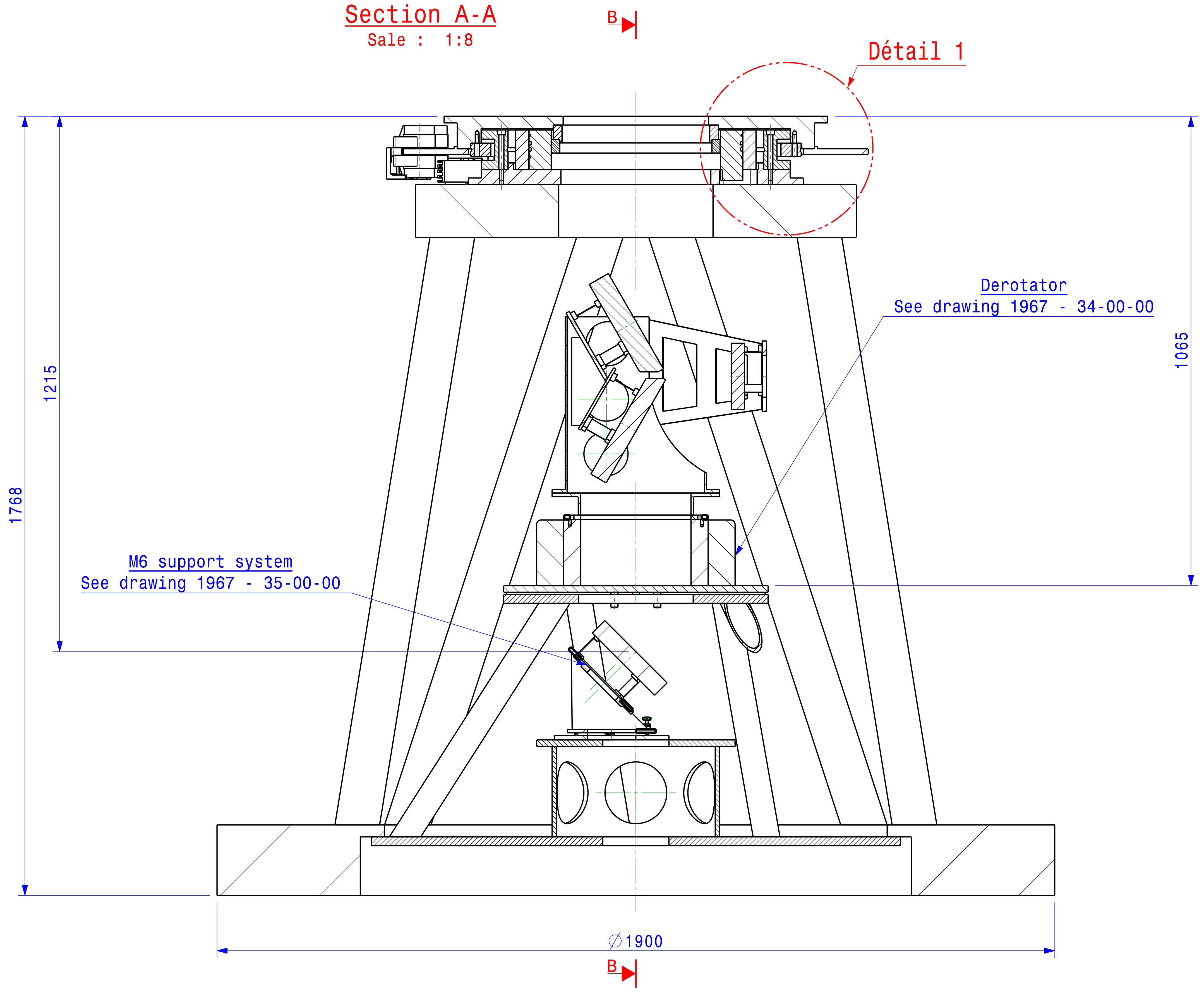

Detail 1
Echelle : 2:5

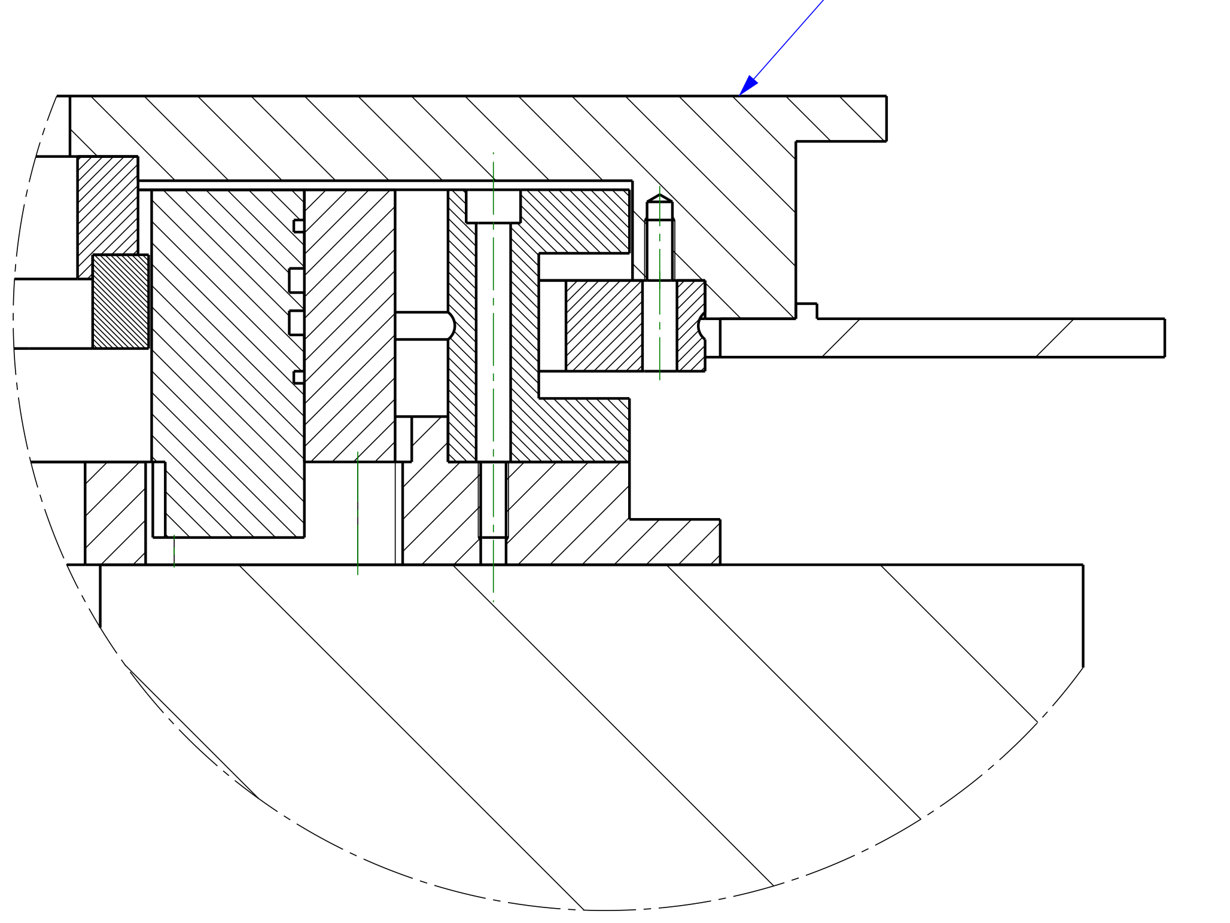

Section B-B
Scale : 1:8

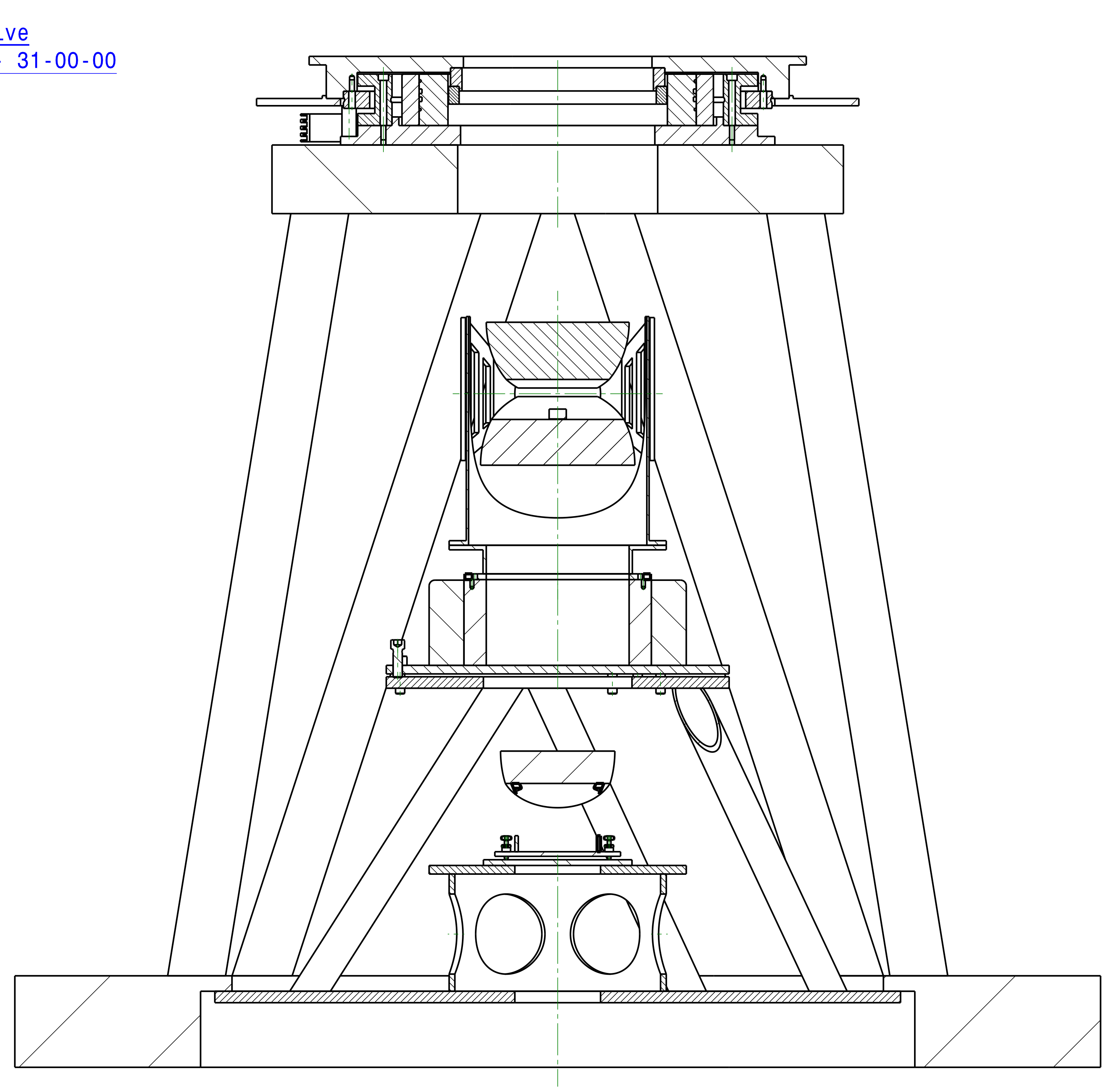

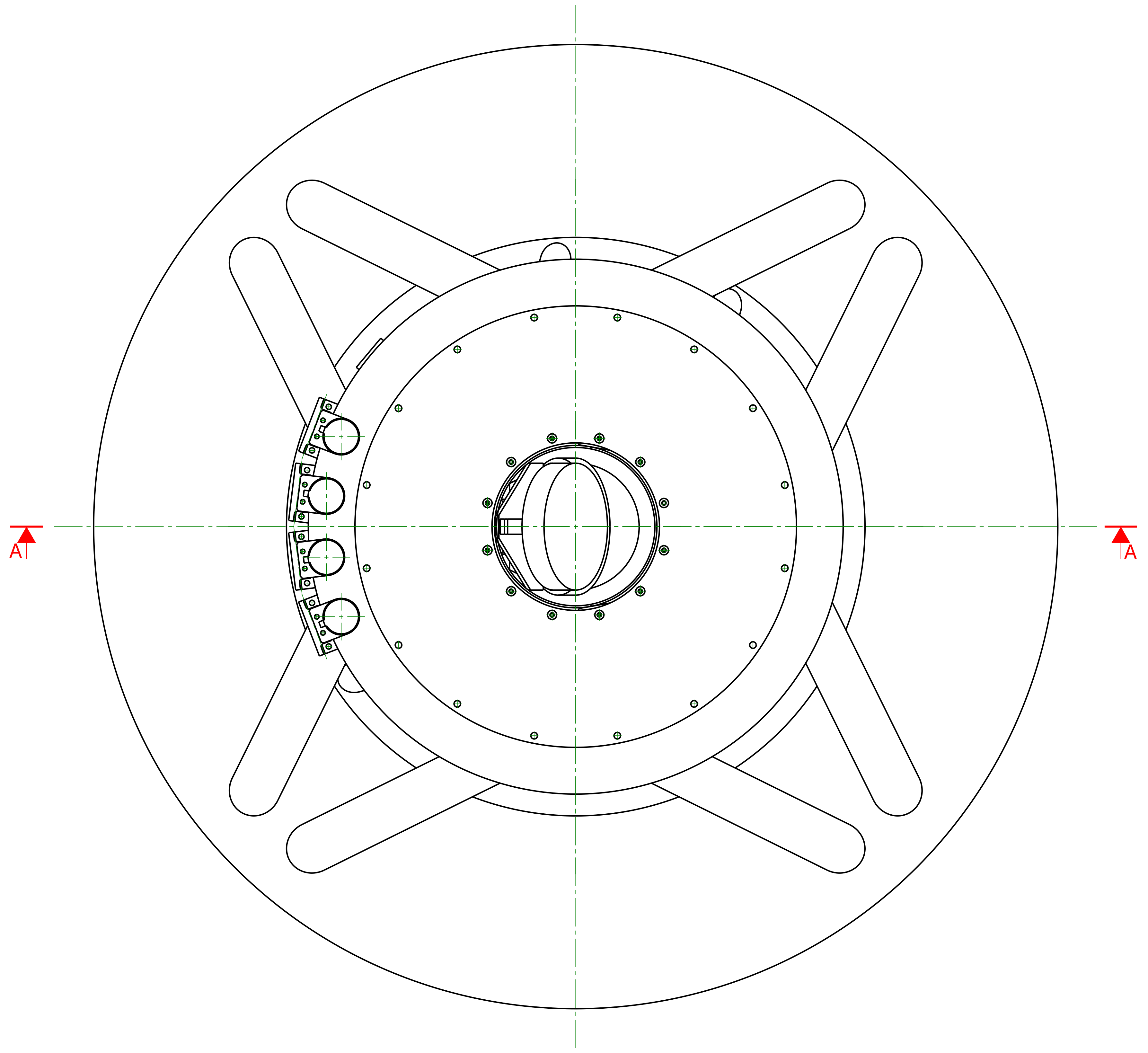

Isométric view
Scale : 1:10

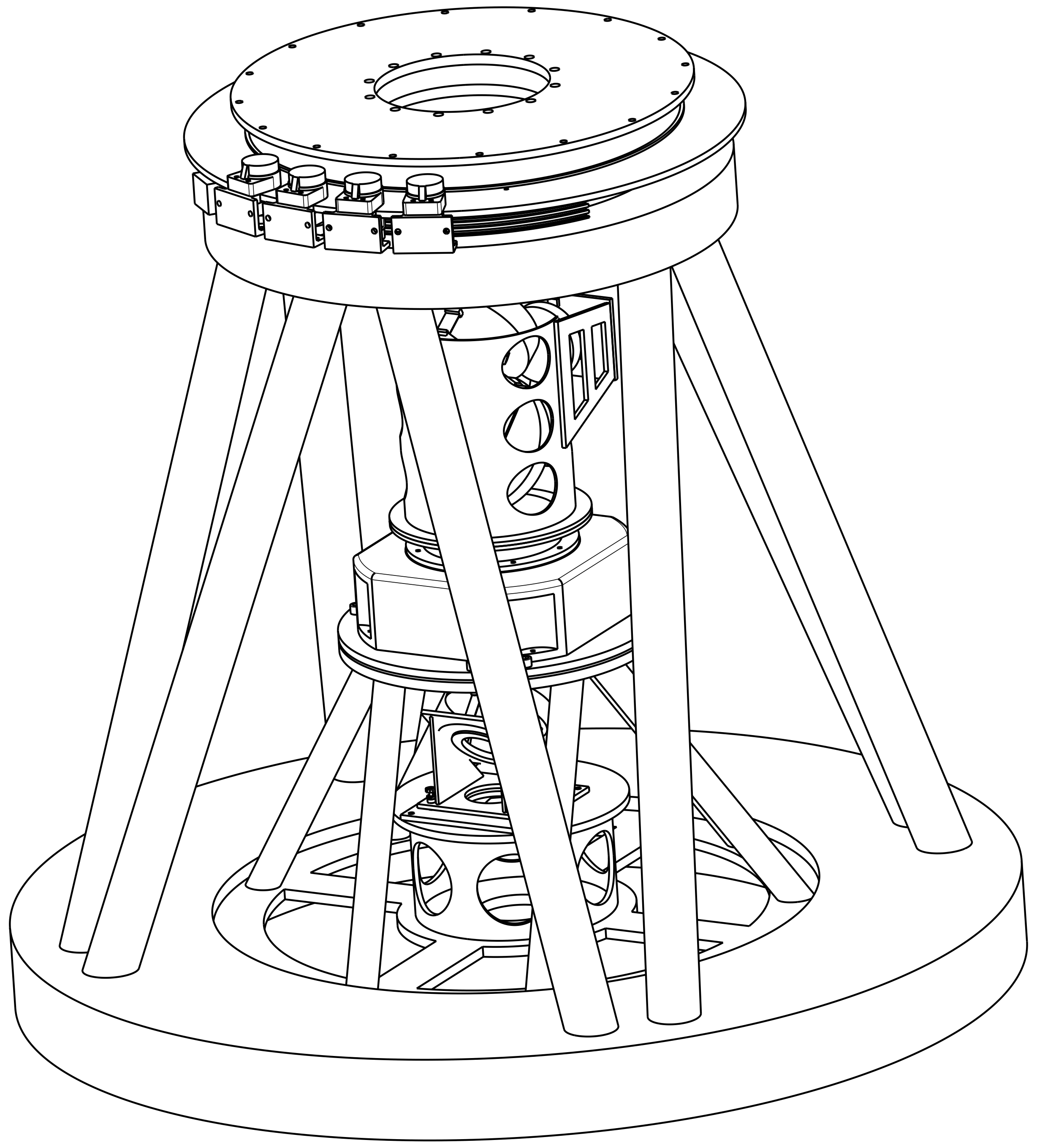

Rep.	Nbr/Ens	Name	Drawing - Remarks - Material

AFL : Approved for Lay-out
CFA : Certified for Application
ASB : As-Built
FIN : Final - to be Archived

Treatment : -
-
-
Mass.: - Kg.

Document 02
Format A1
Tolerances : Machining DIN 7168-f-R
Welding AE DIN 8570

	Date	Name
Drawn	04-07-2007	IBN
Checked	-	-

SA. AMOS
ADVANCED MECHANICAL AND OPTICAL SYSTEMS
Parc Scientifique du Sart-Tilman
rue des Chasseurs Ardennais
B-4031 ANGLEUR [BELGIUM]

Product Item
MAST
Solar telescope
Interface structure
Assembly

Scale 1/8 ; 2/5
Drawing 1967 - 30-00-00
Sheet 1/1
Issue A
Ref. CATIA R:\1967_MAST\1967_30_00_00_ground_IF\1967_30_00_00
Orig.

Section A-A

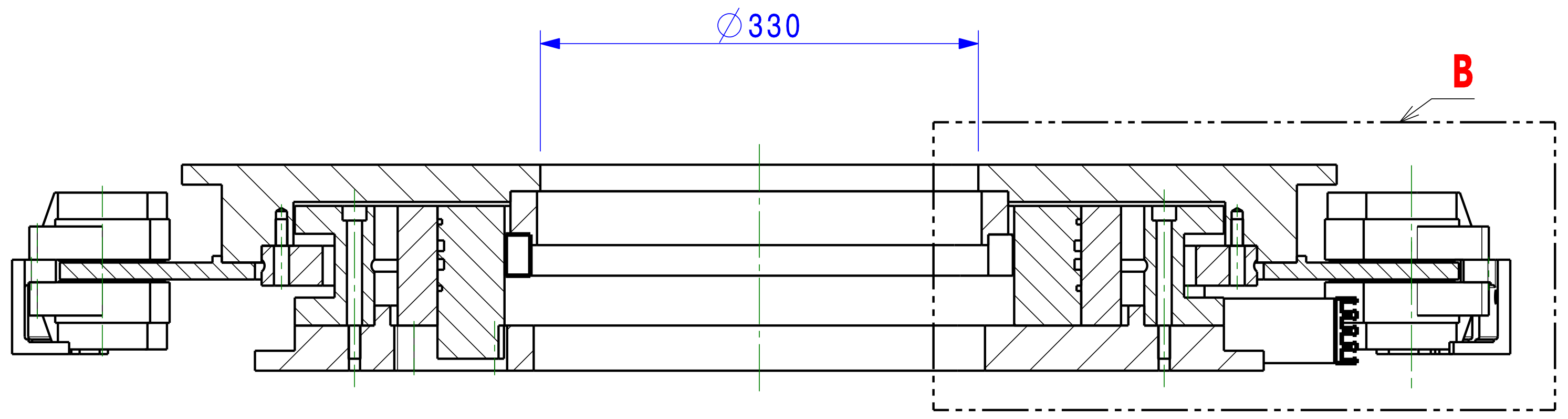

Détail B

scale 1:2

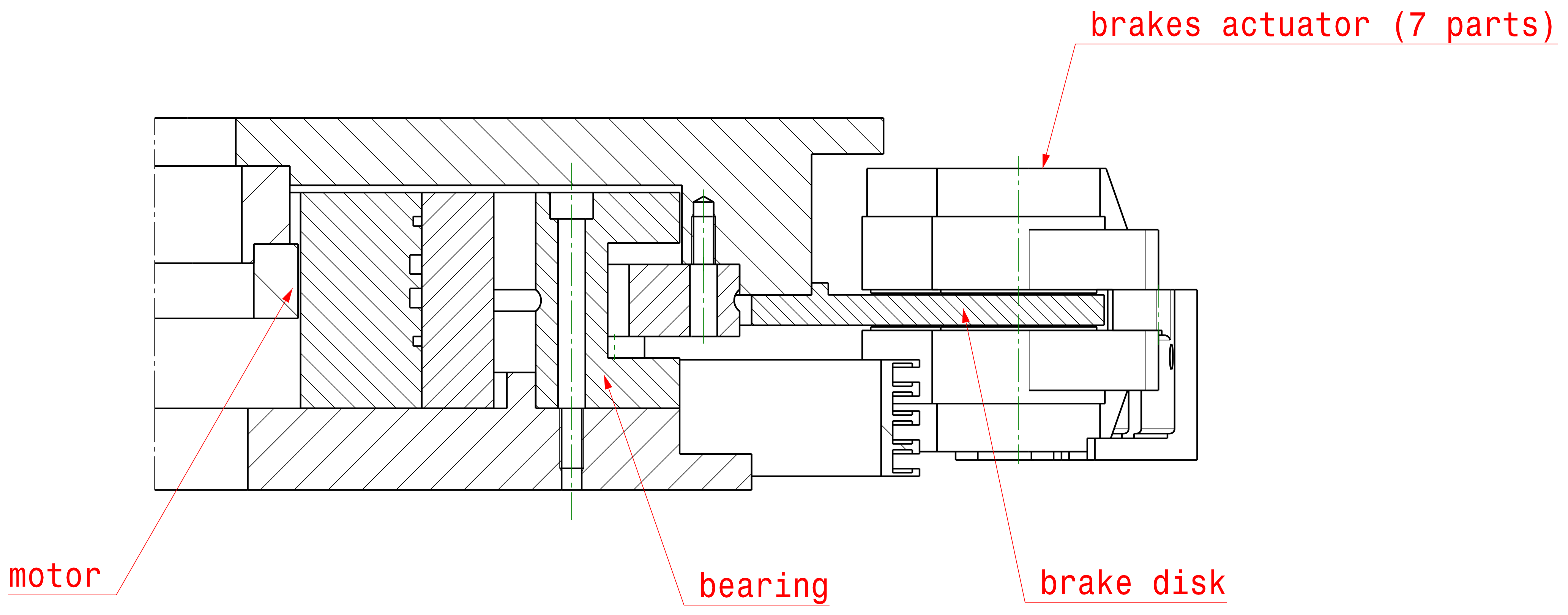

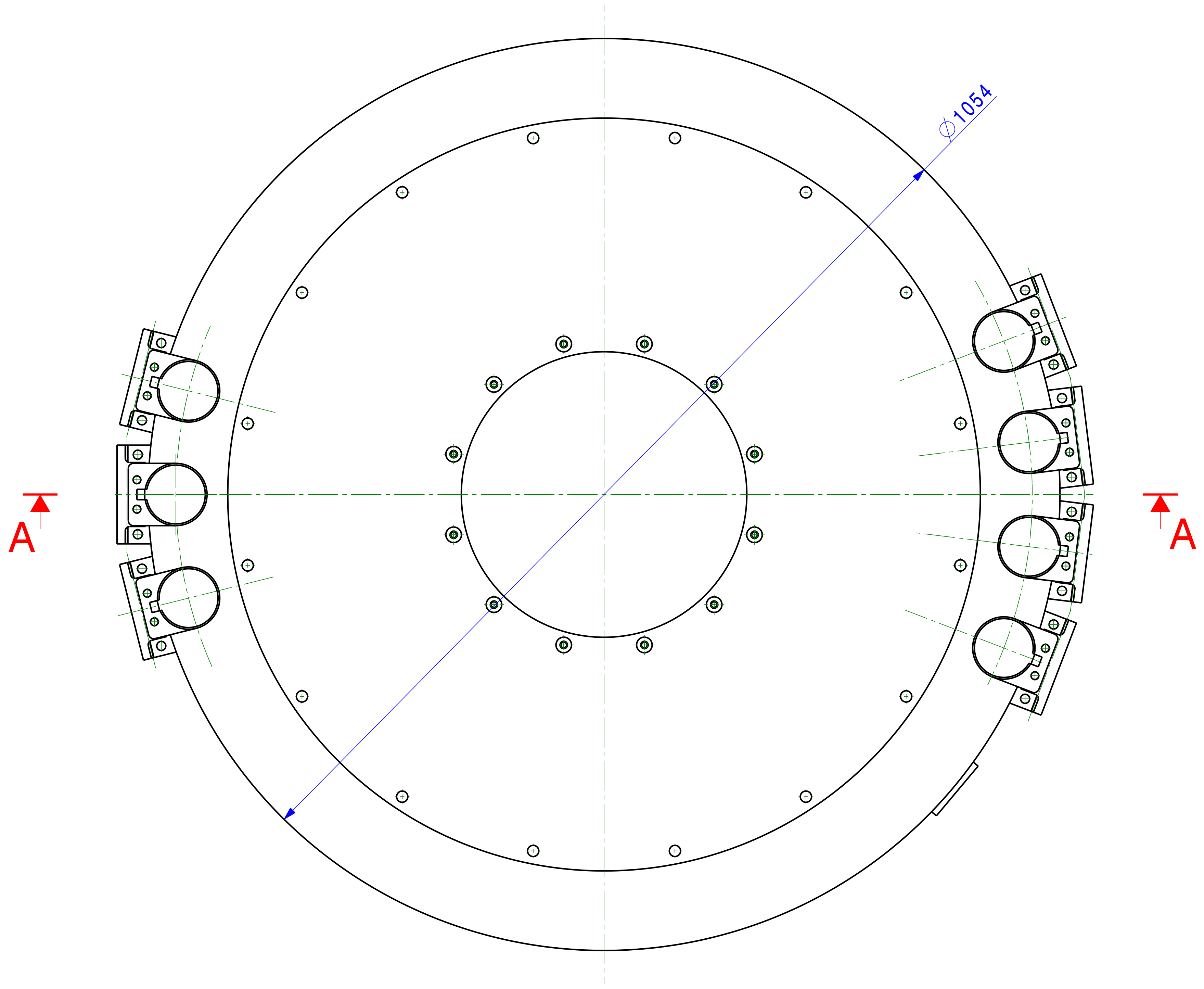

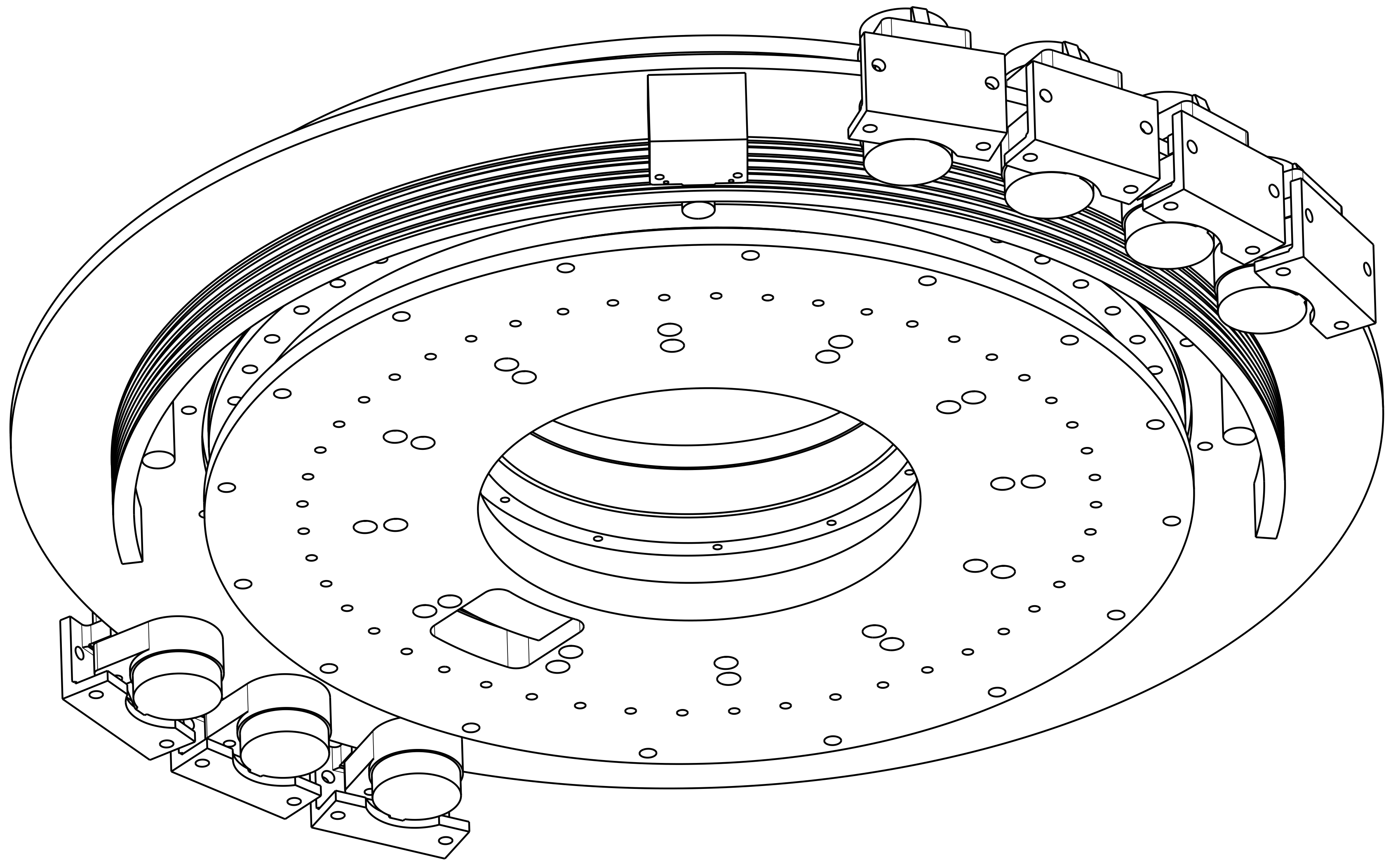

Treatment : -

Mass.: - Kg.

-

Rep.
Nbr/Ens
Name
Drawing - Remarks - Material

AFL : Approved for Lay-out
CFA : Certified for Application
ASB : As-Built
FIN : Final - to be Archived

Document 02
Format A1

Tolerances : Machining DIN 7168-f-R
Welding AE DIN 8570

	Date	Name
Drawn	13-07-2007	IBN
Checked	-	-

SA. AMOS
ADVANCED MECHANICAL AND OPTICAL SYSTEMS
Parc Scientifique du Sart-Tilman
rue des Chasseurs Ardennais
B-4031 ANGLEUR [BELGIUM]

Product Item
MAST
solar telescope
azimuth drive
assembly

Scale 1/5 ; 1/2
Drawing 1967 - 31-00-00
Sheet 1/1
Issue A

Ref. CATIA R:\1967_MAST\1967_30_00_00_ground_IF\1967_31_00_00_azimuth_drive\1967_31_00_00
Orig.

A1

DEROTATOR
Echelle : 2:5

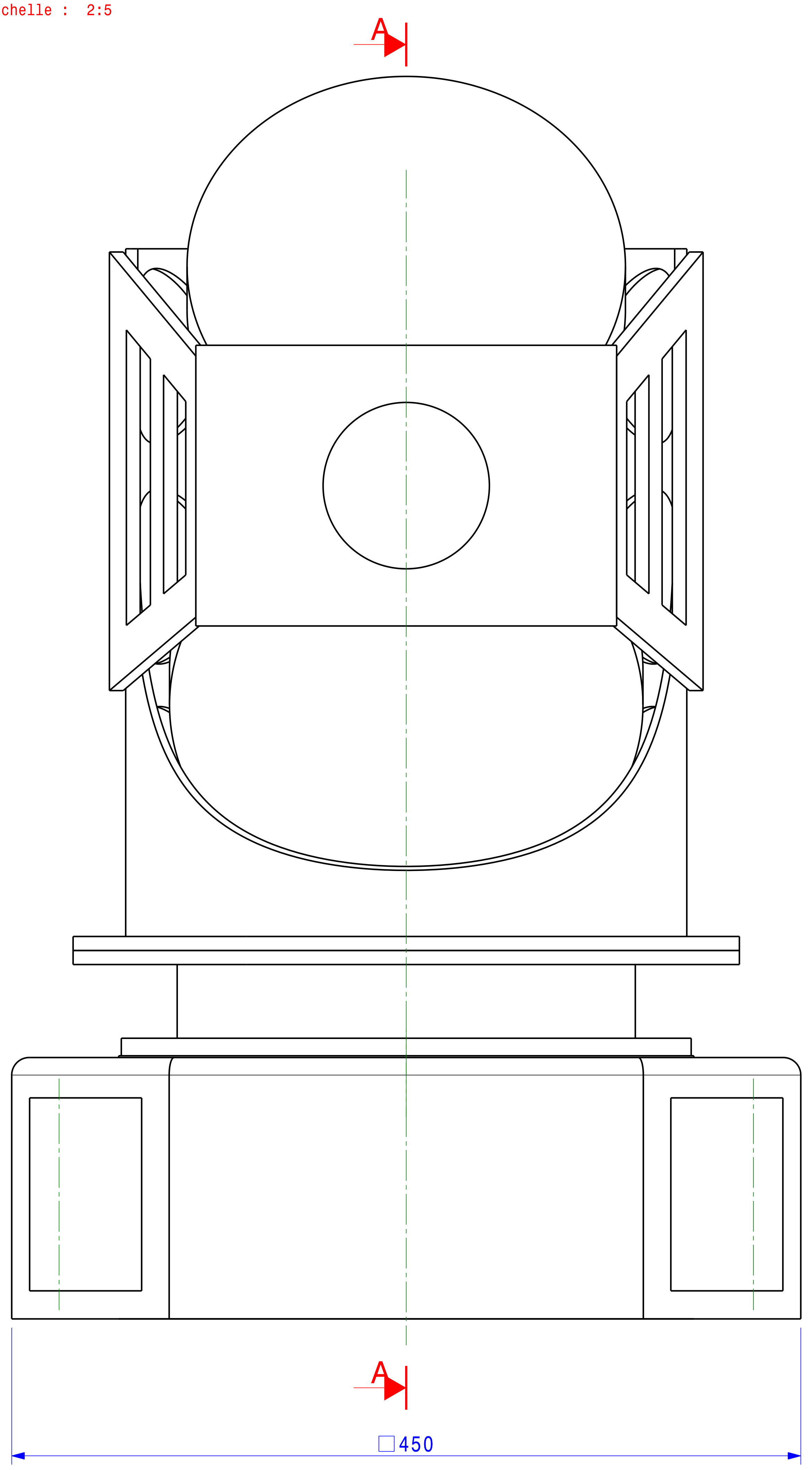

Coupe A-A
Echelle : 2:5

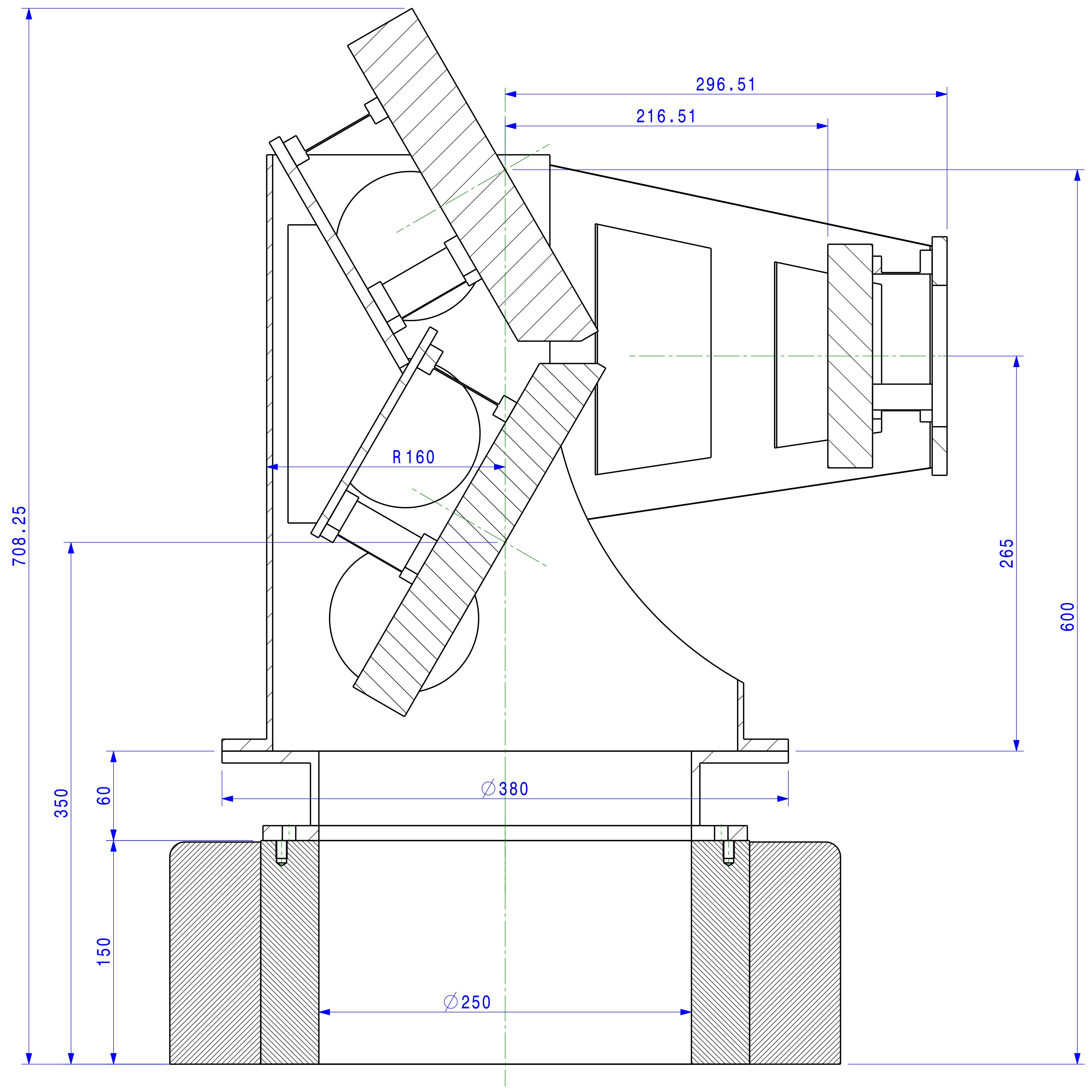

Vue isométrique
Echelle : 1:5

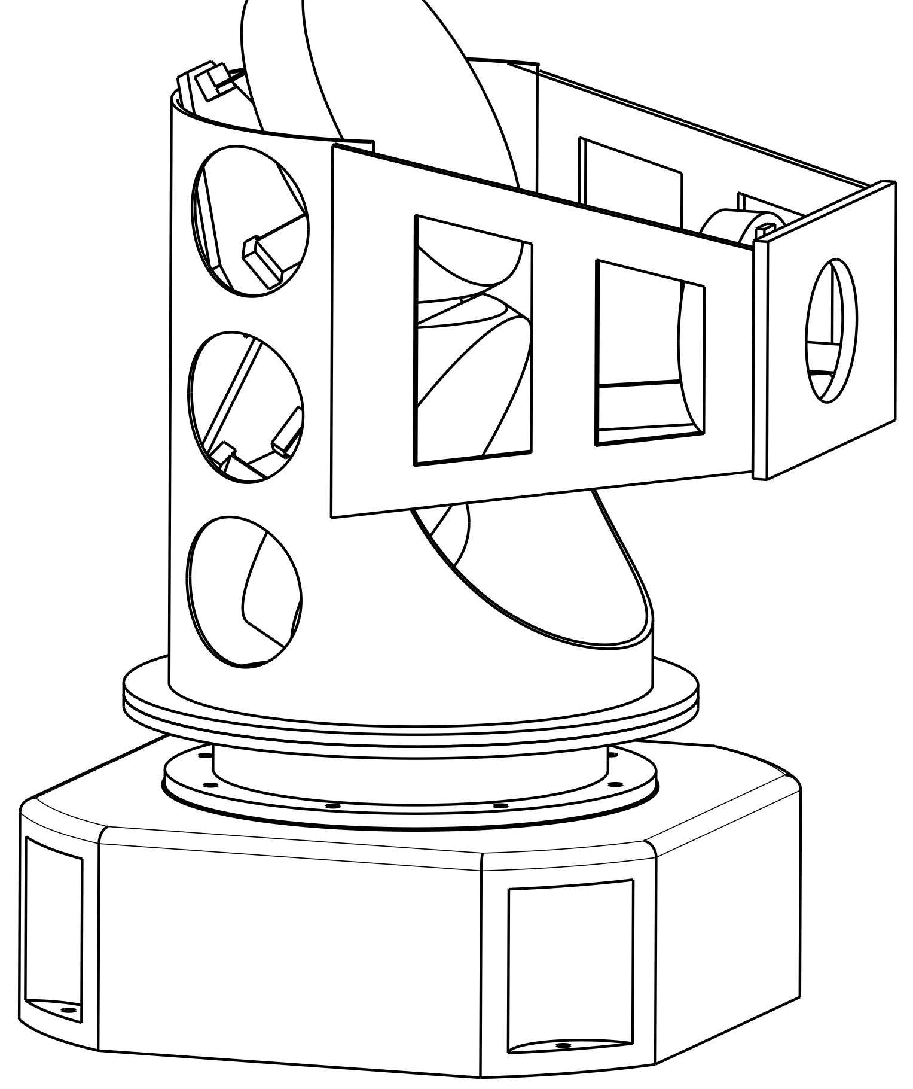

Rep.	Nbr/Ens	Name	Drawing - Remarks - Material

AFL : Approved for Lay-out
CFA : Certified for Application
ASB : As-Built
FIN : Final - to be Archived

Document 02
Format A1

Tolerances :
Machining DIN 7168-f-R
Welding AE DIN 8570

	Date	Name
Drawn	09-07-2007	BLS
Checked	-	-

SA. AMOS
ADVANCED MECHANICAL AND OPTICAL SYSTEMS
Parc Scientifique du Sart-Tilman
rue des Chasseurs Ardennais
B-4031 ANGLEUR [BELGIUM]

Product Item
Mast
Solar telescope
Derotator
Assembly

Treatment : -
Mass.: - Kg. -

Scale 1/5
Drawing 1967 - 34-00-00
Sheet 1/1
Issue A

Ref. CATIA R:\1967_MAST\1967_30_00_00_ground_IF\1967_34_00_00_derotator\DEROTATOR\1967_34_00_00
Orig.

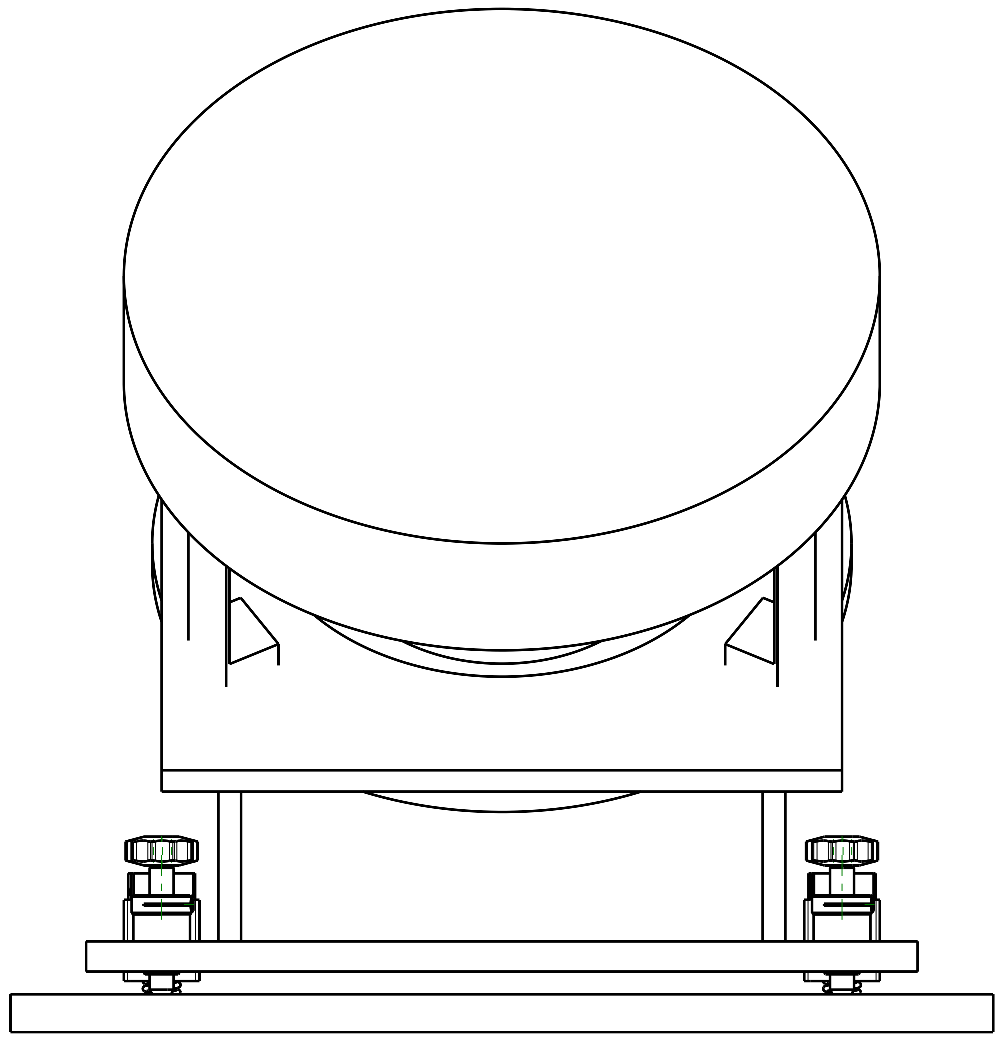

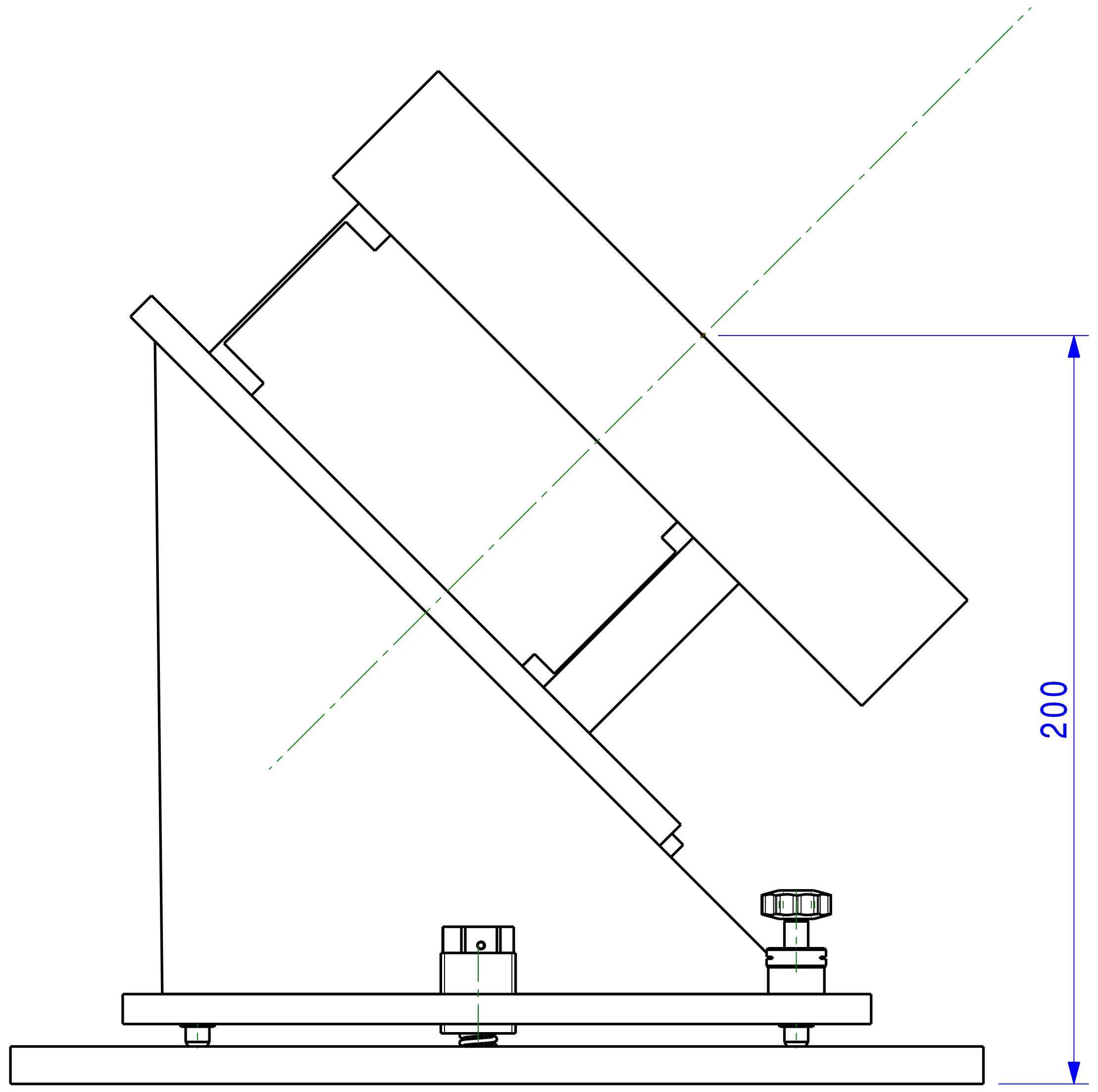

Isométric view

Scalle : 2:5

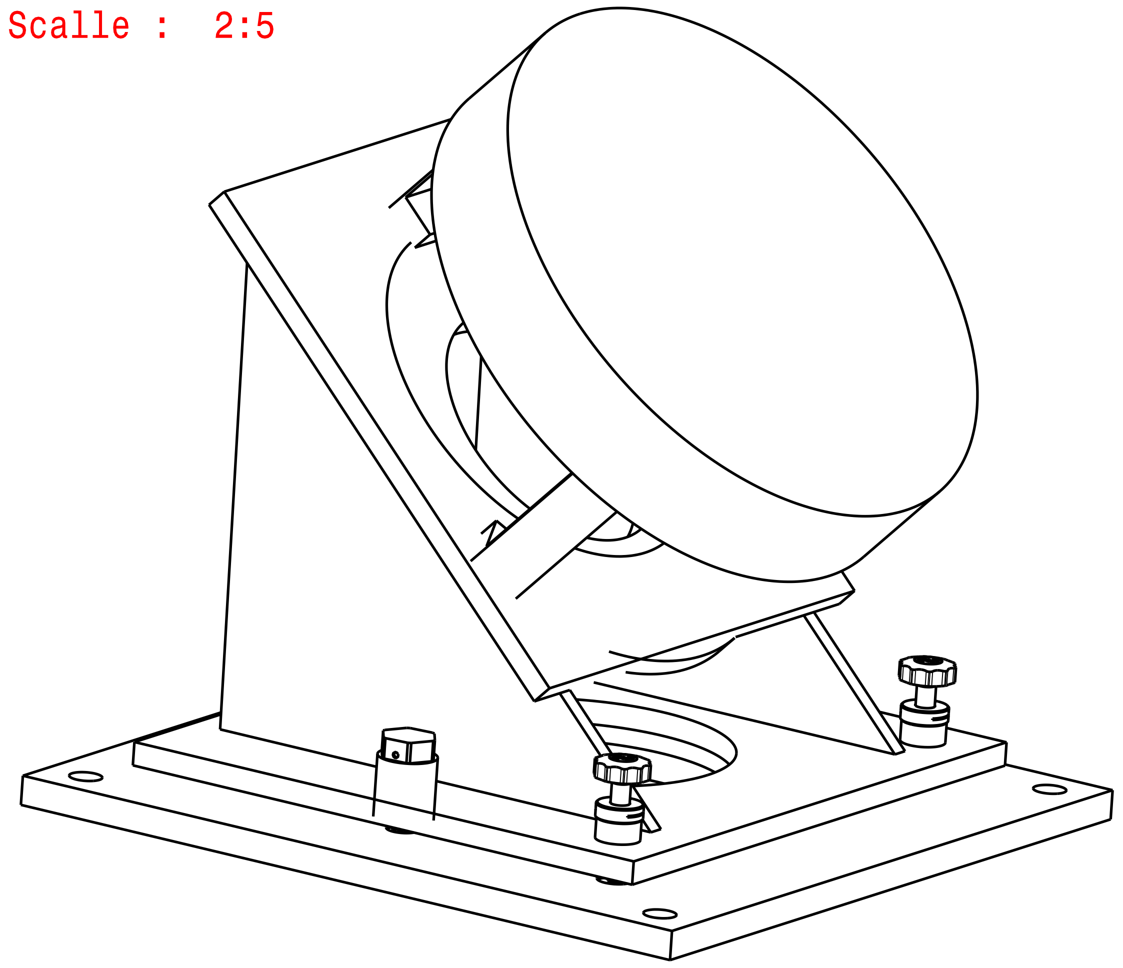

Rep.	Nbr/Ens	Name	Drawing - Remarks - Material

AFL : Approved for Lay-out	CFA : Certified for Application	ASB : As-Built	FIN : Final - to be Archived

Document	02
Format	A2

Tolerances : Machining DIN 7168-f-R
Welding AE DIN 8570

	Date	Name
Drawn	05-07-2007	IBN
Checked	-	-

SA. AMOS
ADVANCED MECHANICAL AND OPTICAL SYSTEMS
Parc Scientifique du Sart-Tilman
rue des Chasseurs Ardennais
B-4031 ANGLEUR [BELGIUM]

Product Item
MAST
Solar telescope
M6 unit
Assembly

Scale 1/1 ; 2/5

Drawing 1967 - 35-00-00

Sheet 1/1

Issue A

Ref. CATIA R:\1967_MAST\1967_30_00_00_ground_IF\1967_35_00_00_M6\1967_35_00_00

Orig.

Treatment : -

Mass.: - Kg. -

-

A0

face view

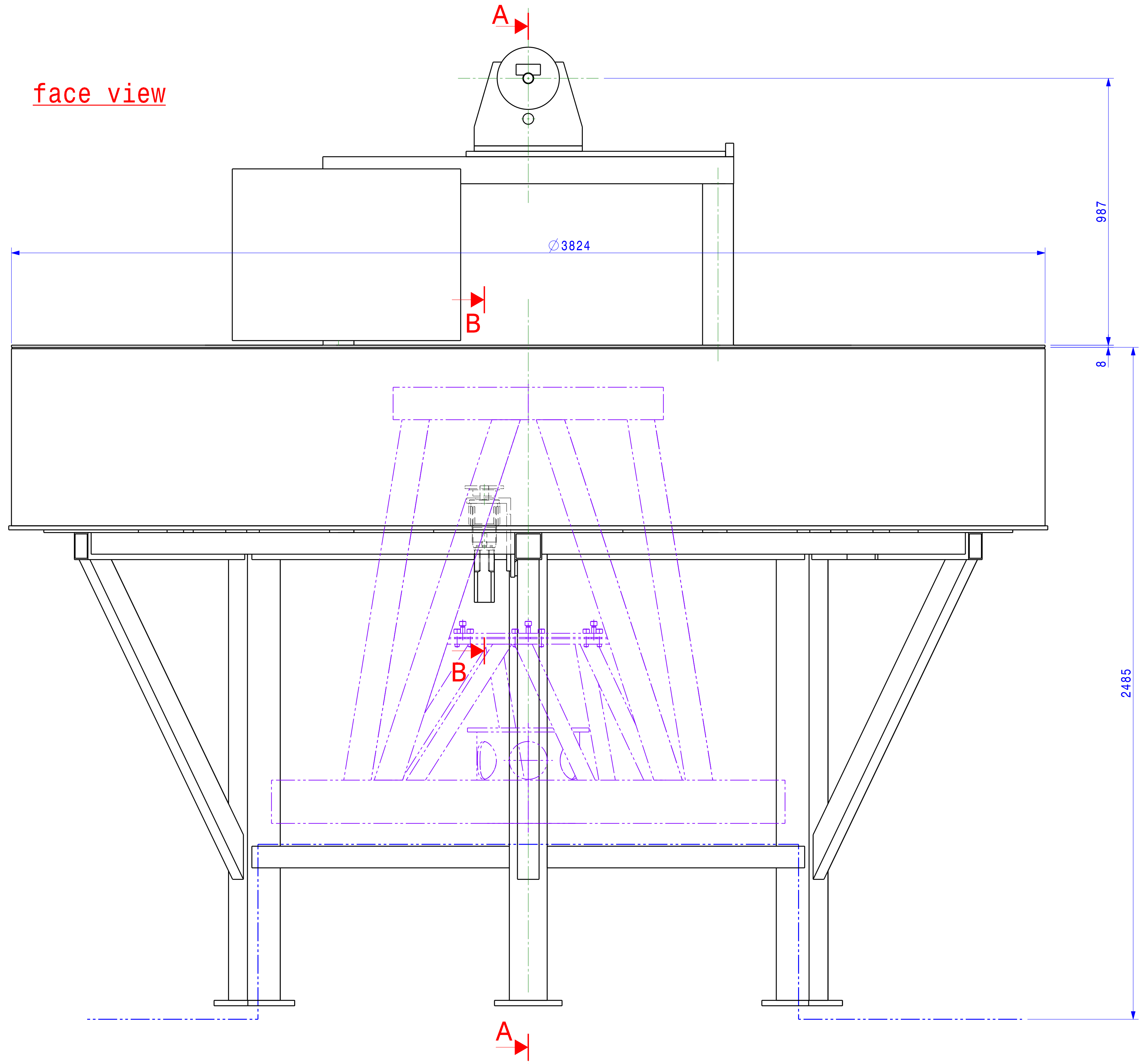

section A-A

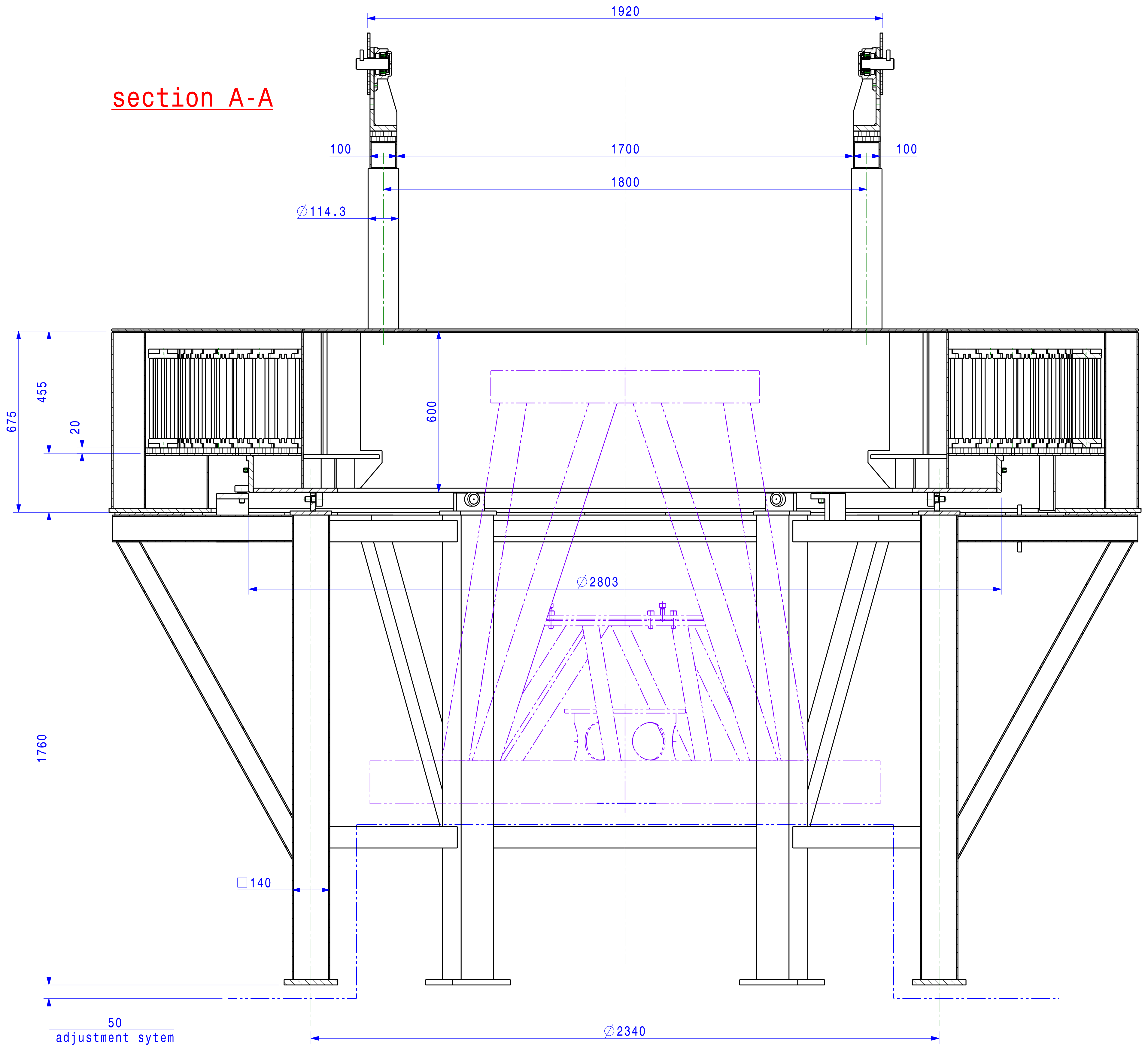

top view

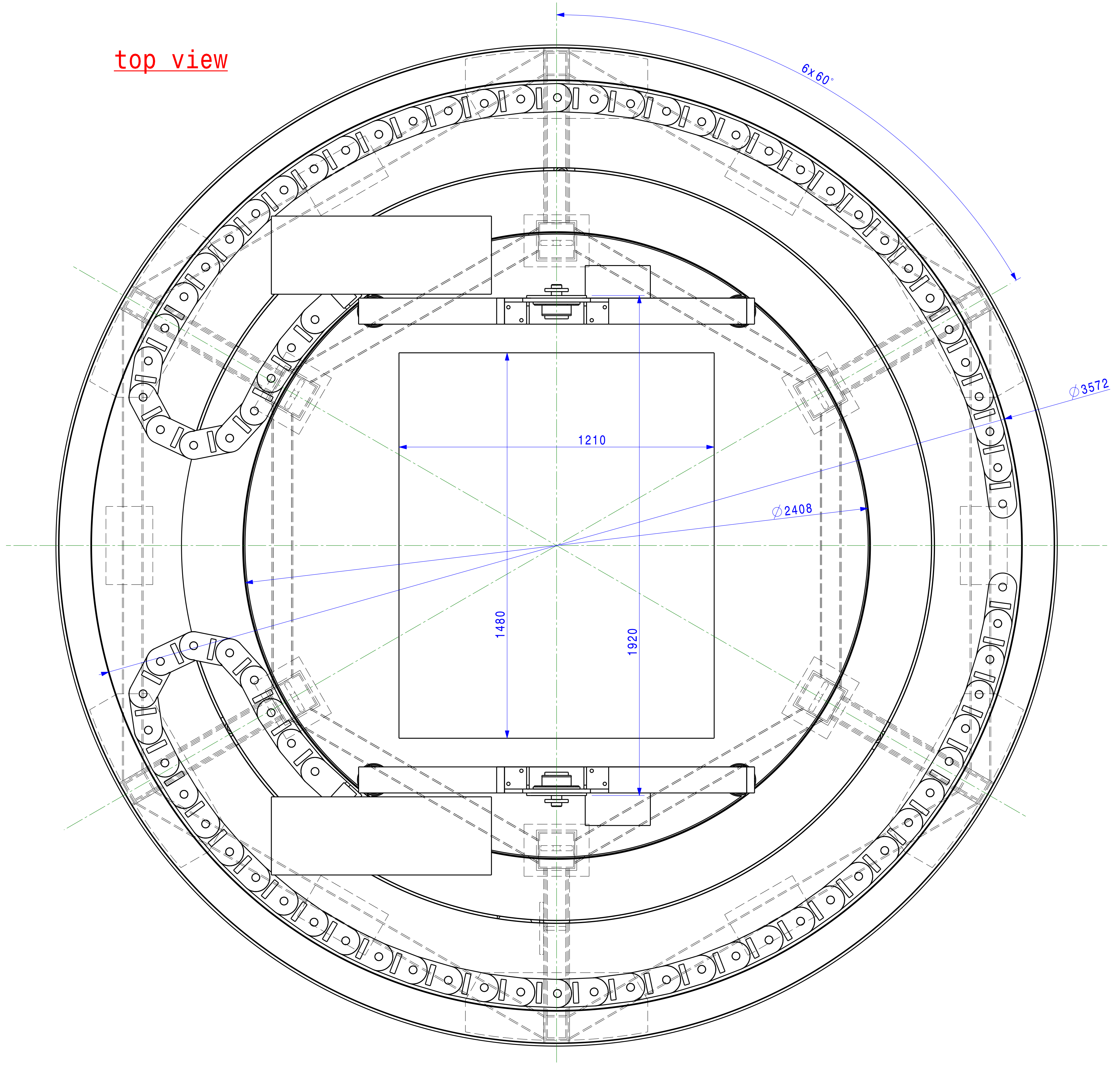

section B-B

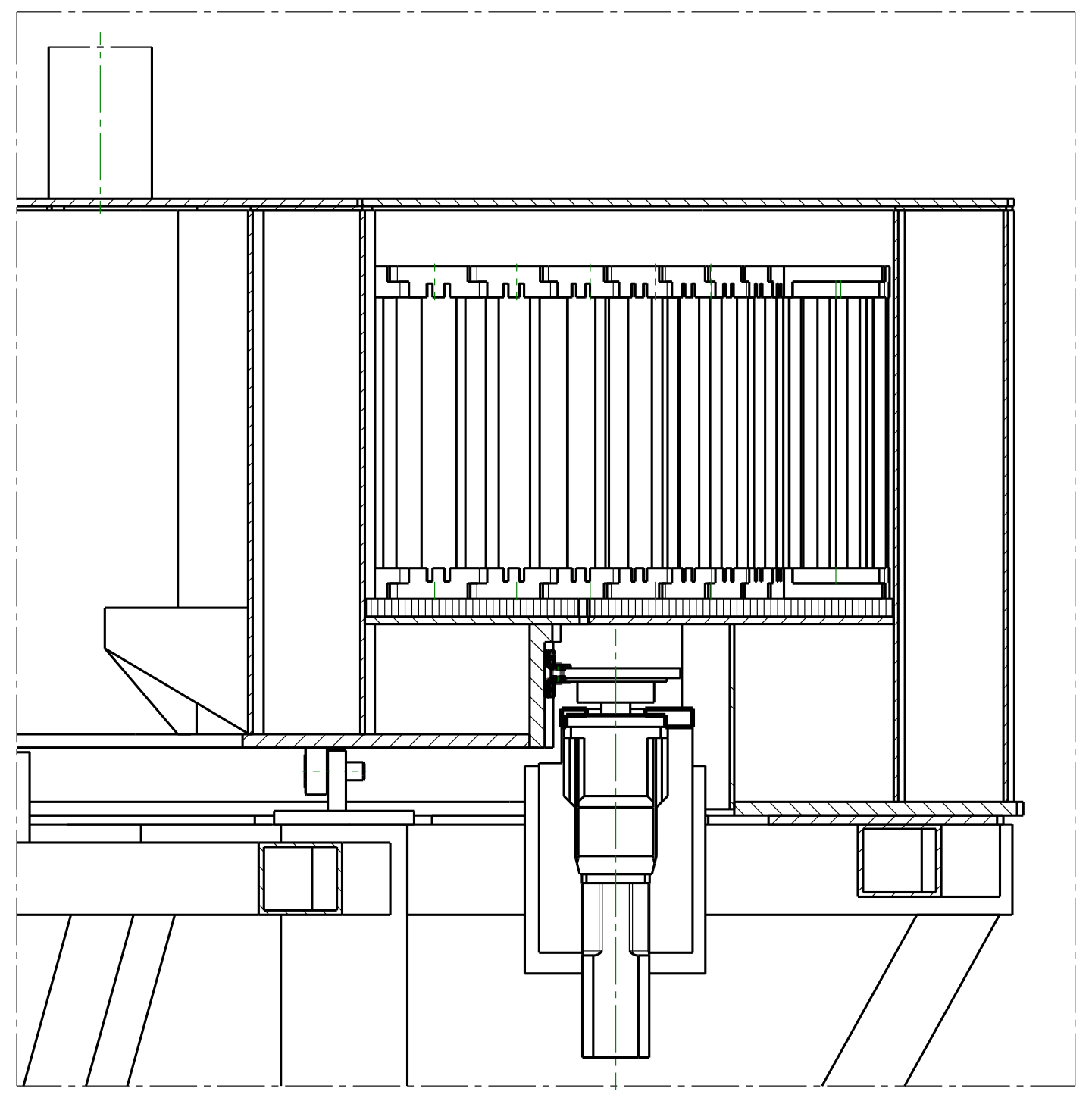

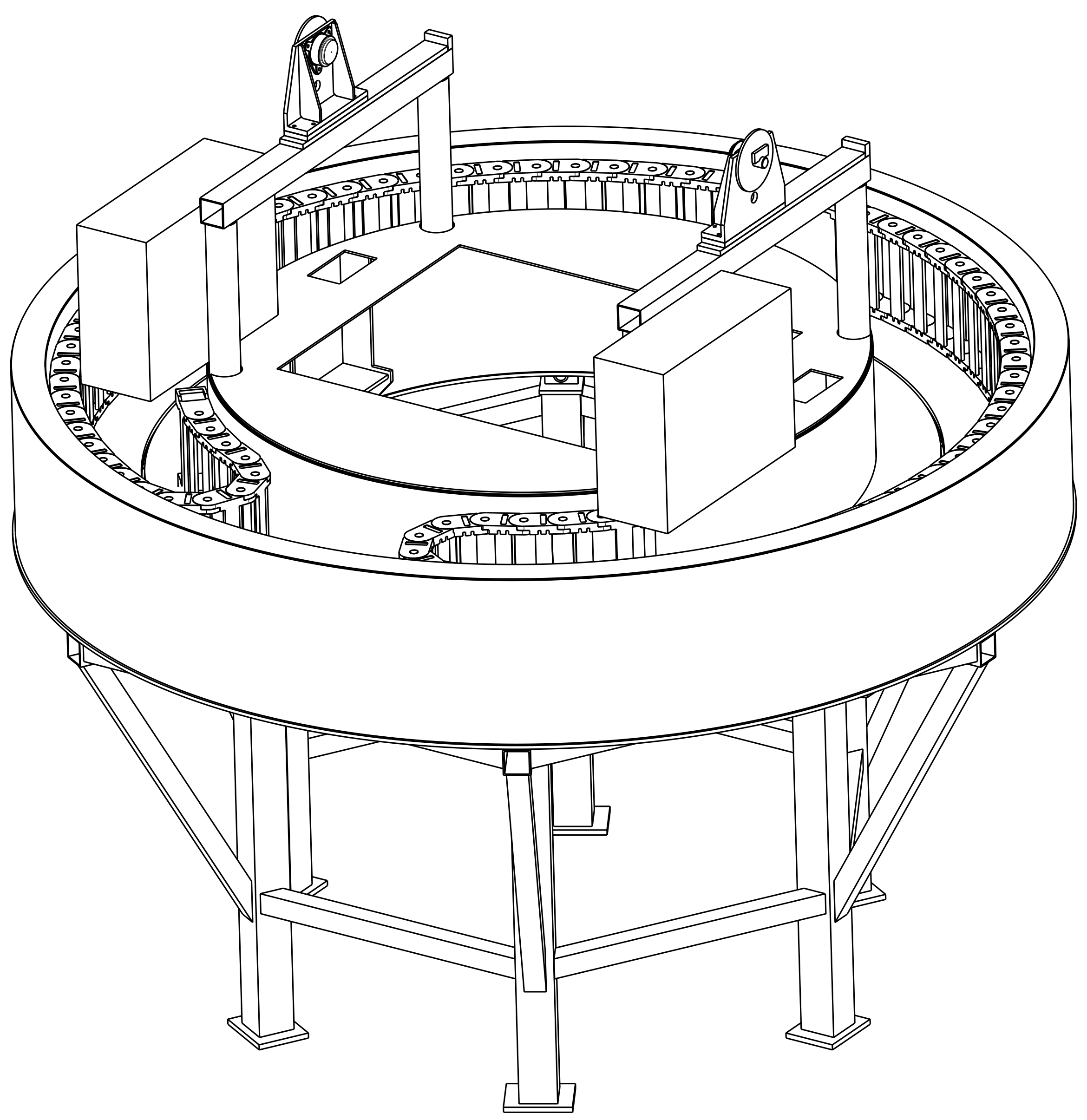

Rep.	Nbr/Ens	Name	Drawing - Remarks - Material

AFL : Approved for Lay-out	CFA : Certified for Application	ASB : As-Built	FIN : Final - to be Archived

Treatment :		-
Mass.: - Kg.		-
		-

Document 02	Format A0	AMOS SA. ADVANCED MECHANICAL AND OPTICAL SYSTEMS Parc Scientifique du Sart-Tilman rue des Chasseurs Ardennais B-4031 ANGLEUR [BELGIUM]	Product Item	MAST solar telescope cable wrap assenbly
Tolerances :	Machining DIN 7168-f-R Welding AE DIN 8570			

	Date	Name
Drawn	13-07-2007	-
Checked	-	-

Scale	Drawing	Sheet	Issue
1/10	1967 - 40-00-00	1/1	A

Ref. CATIA R:\1967_MAST\1967_33_00_00_cable _wrap\1967_33_00_00 Orig.

A0

face view

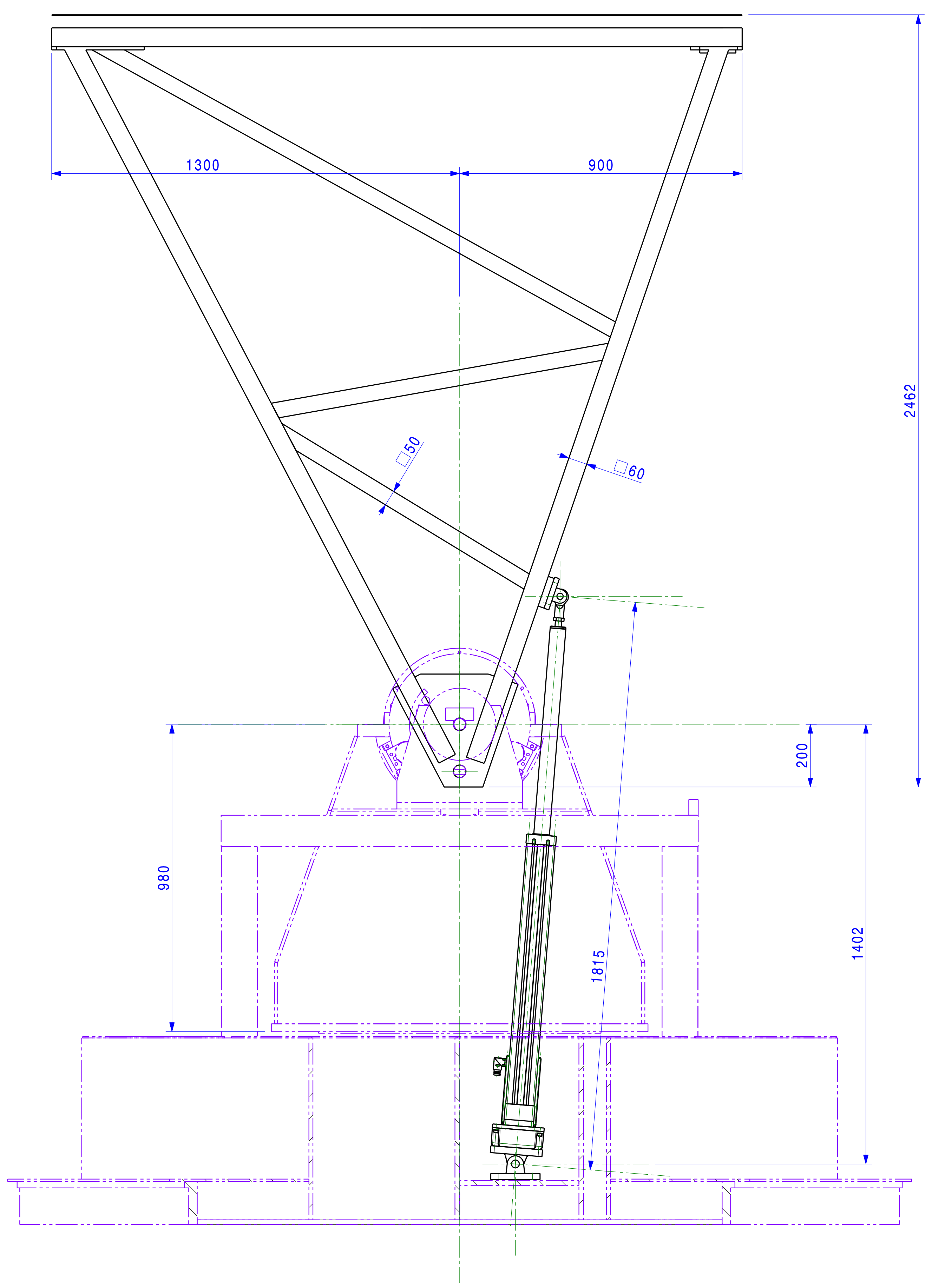

left view

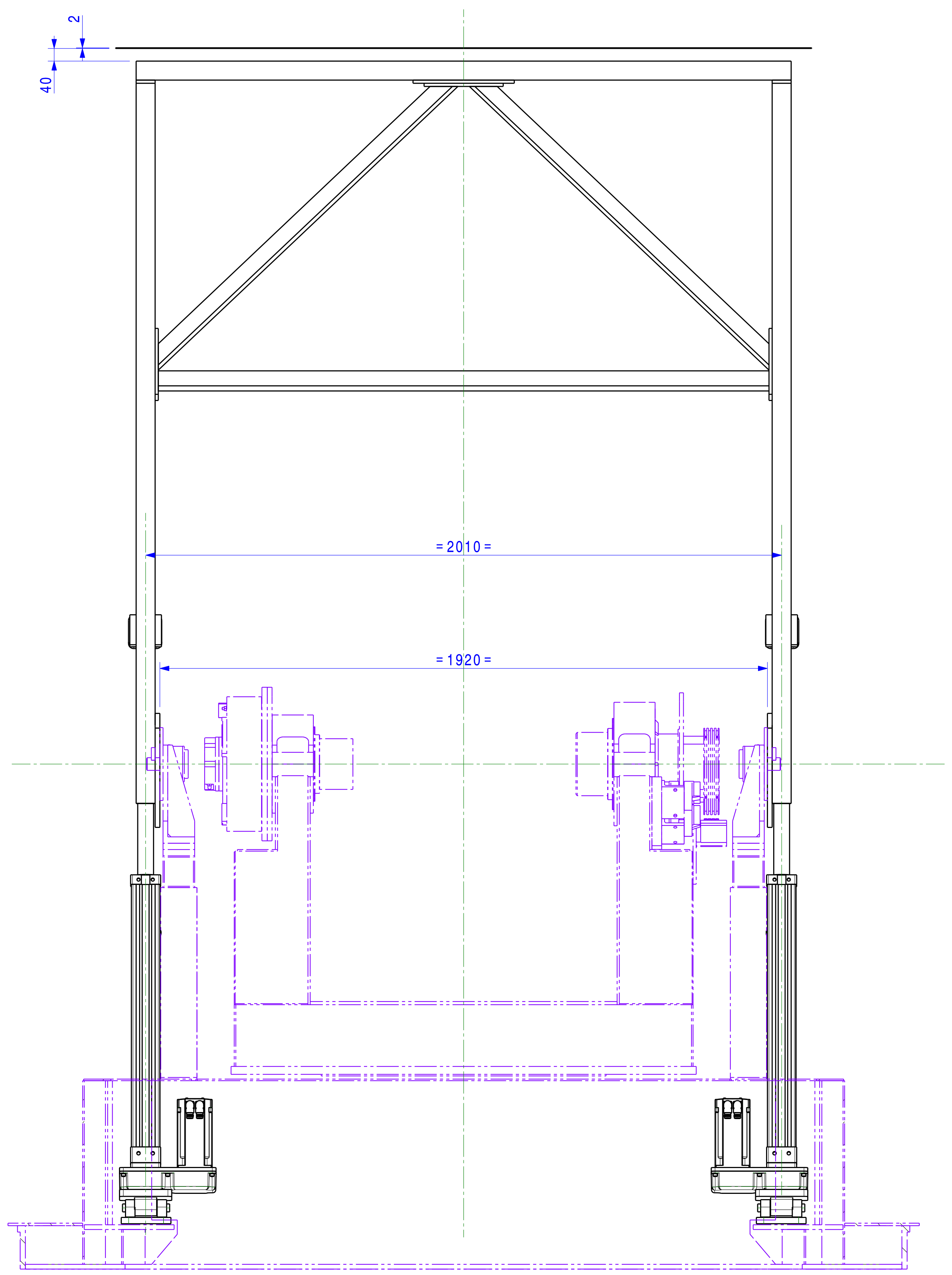

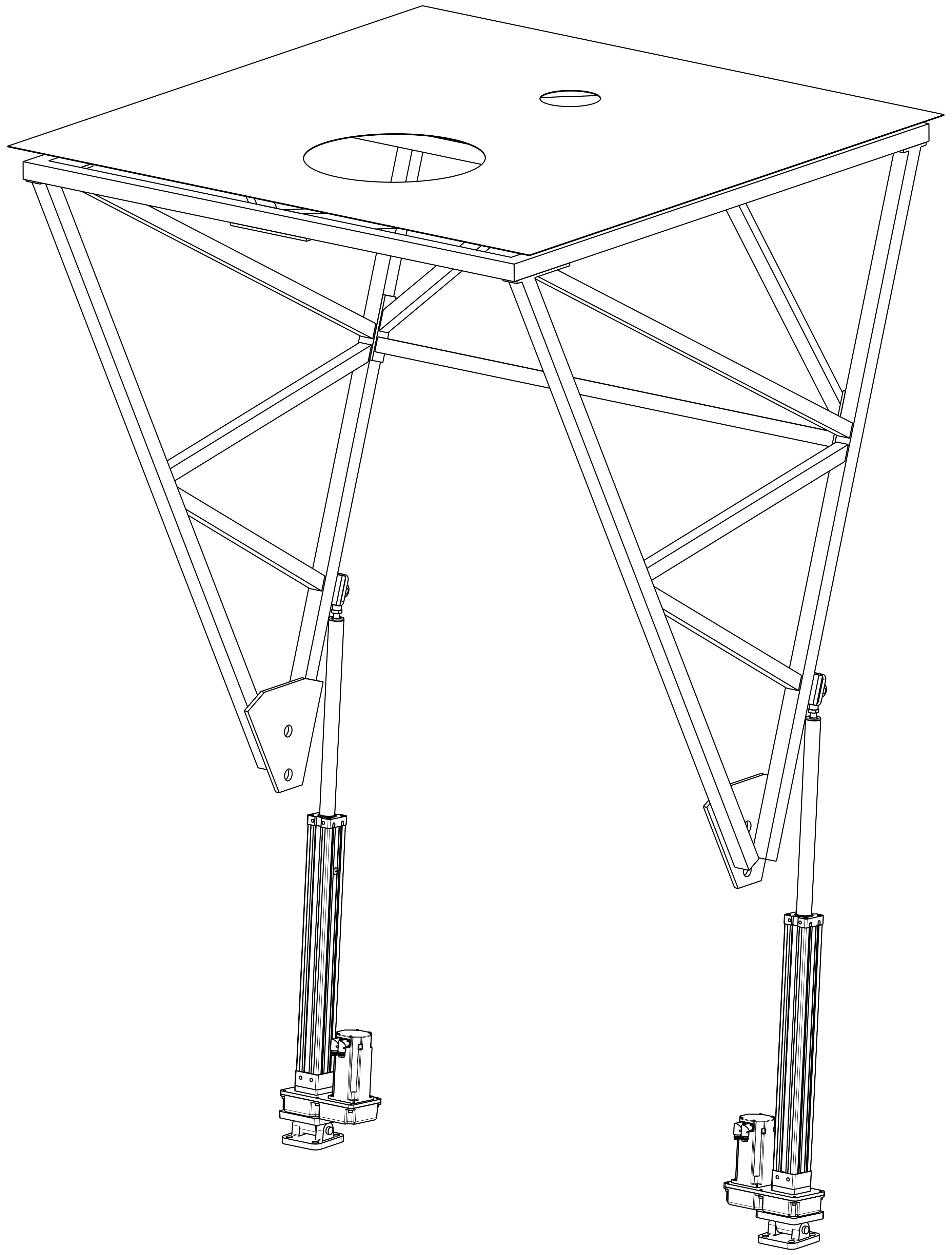

top view

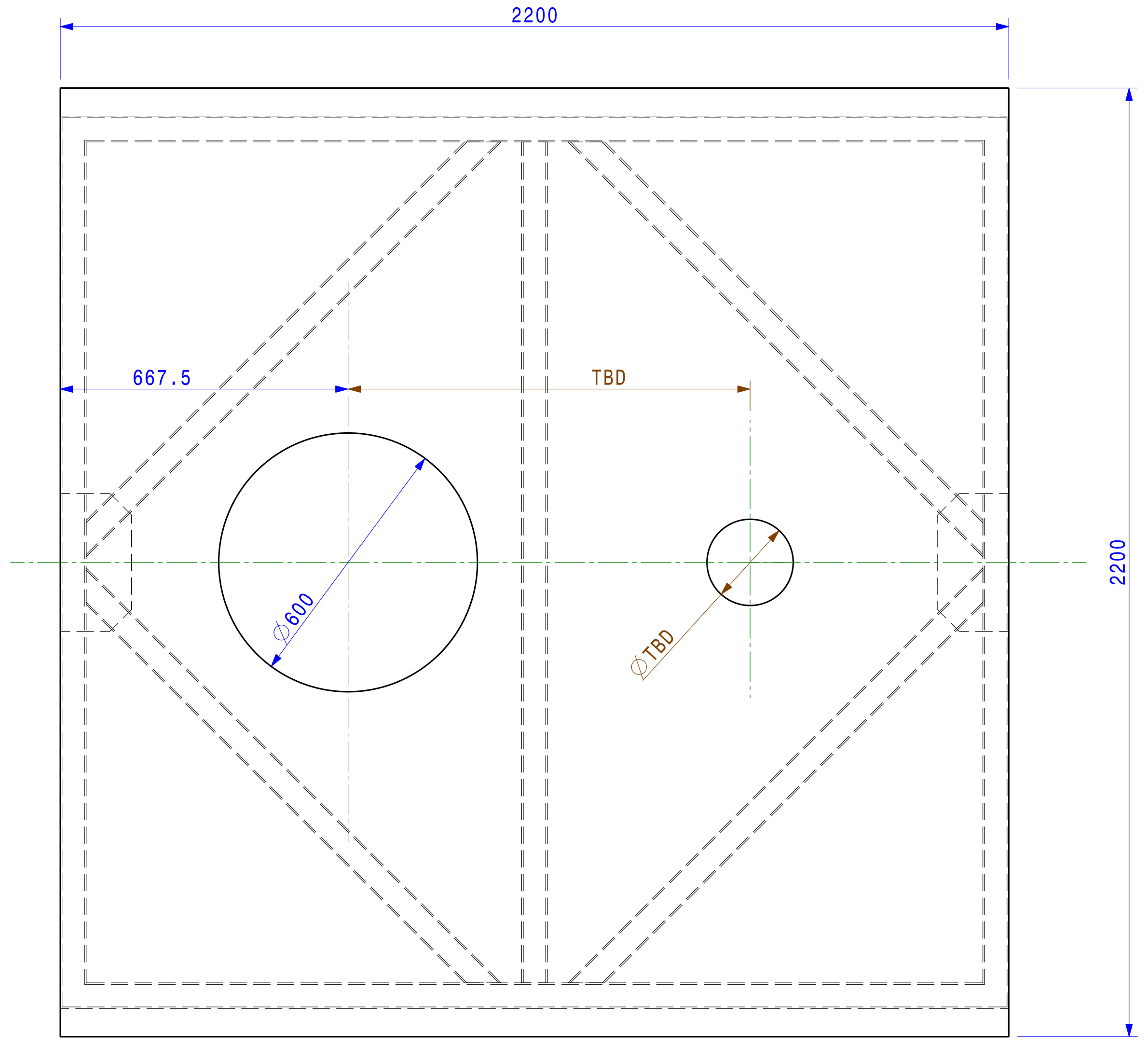

Rep.	Nbr/Ens	Name	Drawing - Remarks - Material

AFL : Approved for Lay-out	CFA : Certified for Application	ASB : As-Built	FIN : Final - to be Archived

Document	02	
Format	A0	
Tolerances :	Machining	DIN 7168-f-R
	Welding	AE DIN 8570
	Date	Name
Drawn	13-07-2007	-
Checked	-	-

SA. AMOS
ADVANCED MECHANICAL AND OPTICAL SYSTEMS

Parc Scientifique du Sart-Tilman
rue des Chasseurs Ardennais
B-4031 ANGLEUR [BELGIUM]

Product Item
MAST
solar telescope
upper sunshield
assembly

Treatment :	-
Mass.: - Kg.	-
	-

Scale	Drawing	Sheet	Issue
1/10	1967 - 50-00-00	1/1	A

Ref. CATIA R:\1967_MAST\1967_50_00_00_upper_sun_shield\1967_50_00_00 Orig.